US00D714835S

(12) United States Design Patent

Chen

(10) Patent No.: US D714,835 S
(45) Date of Patent: ** Oct. 7, 2014

(54) **AIR COMPRESSOR CYLINDER HOUSING**

(71) Applicant: **Chun Lan Chen**, Xingling (CN)

(72) Inventor: **Chun Lan Chen**, Xingling (CN)

(**) Term: **14 Years**

(21) Appl. No.: **29/492,299**

(22) Filed: **May 30, 2014**

(51) **LOC (10) Cl.** **15-02**

(52) **U.S. Cl.**
USPC **D15/9**

(58) **Field of Classification Search**
USPC D15/7–9; D23/231, 232, 225; 417/60, 417/235, 265, 321, 355, 358, 363, 359, 417/410.1, 415–416, 405, 900; 60/408, 60/412; 184/26–37; 415/140–147, 108, 415/915; 123/495, 509
See application file for complete search history.

(56) **References Cited**

U.S. PATENT DOCUMENTS

D659,168	S	*	5/2012	Chen	D15/9
D659,169	S	*	5/2012	Chen	D15/9
D659,170	S	*	5/2012	Chen	D15/9
D681,062	S	*	4/2013	Chen	D15/9
D694,273	S	*	11/2013	Chen	D15/9
D694,275	S	*	11/2013	Chen	D15/9
D704,230	S	*	5/2014	Nam	D15/9

* cited by examiner

Primary Examiner — Ralf Seifert
(74) *Attorney, Agent, or Firm* — Charles E. Baxley

(57) **CLAIM**

The ornamental design for an air compressor cylinder housing, as shown and described.

DESCRIPTION

FIG. **1** is a front and upper perspective view of an air compressor cylinder housing showing my new design;
FIG. **2** is a front elevational view thereof;
FIG. **3** is a rear elevational view thereof;
FIG. **4** is a top plan view thereof;
FIG. **5** is a bottom plan view thereof;
FIG. **6** is a left side elevational view thereof;
FIG. **7** is a right side elevational view thereof;
FIG. **8** is a rear perspective view thereof;
FIG. **9** is a front and bottom perspective view thereof;
FIG. **10** is a front and upper perspective view thereof, the recesses and the protruded bulges depicted by means of broken lines being for illustrative purposes only and forming no part of the claimed design; and,
FIG. **11** is a rear perspective view thereof, the recesses and the protruded bulges depicted by means of broken lines being for illustrative purposes only and forming no part of the claimed design.

1 Claim, 9 Drawing Sheets

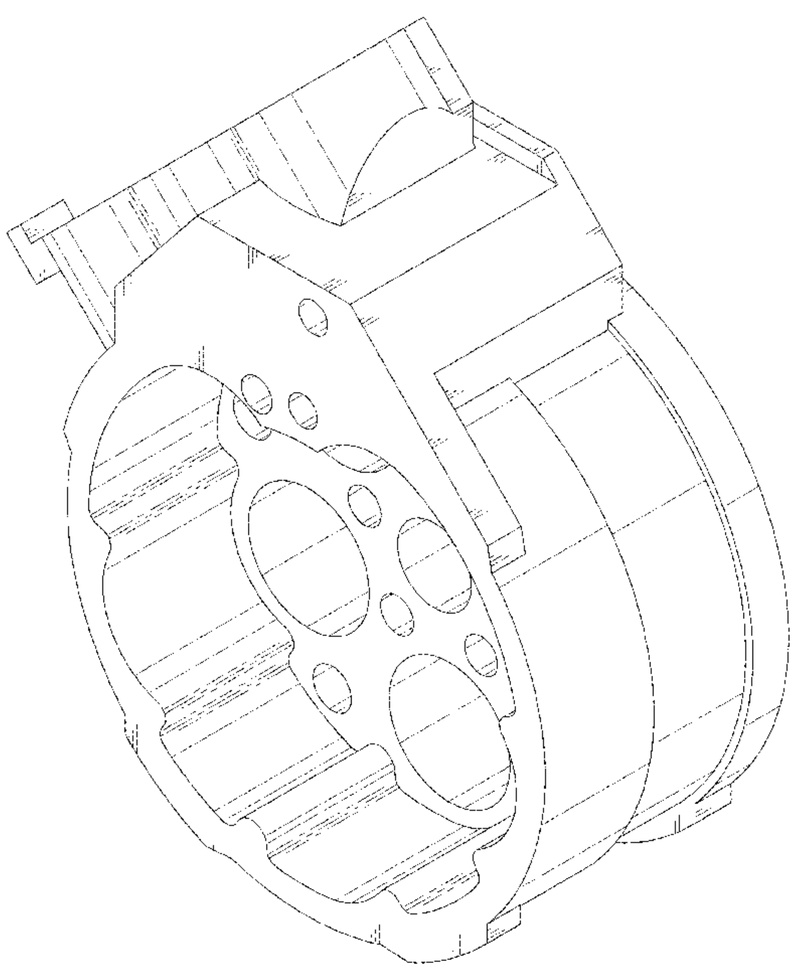

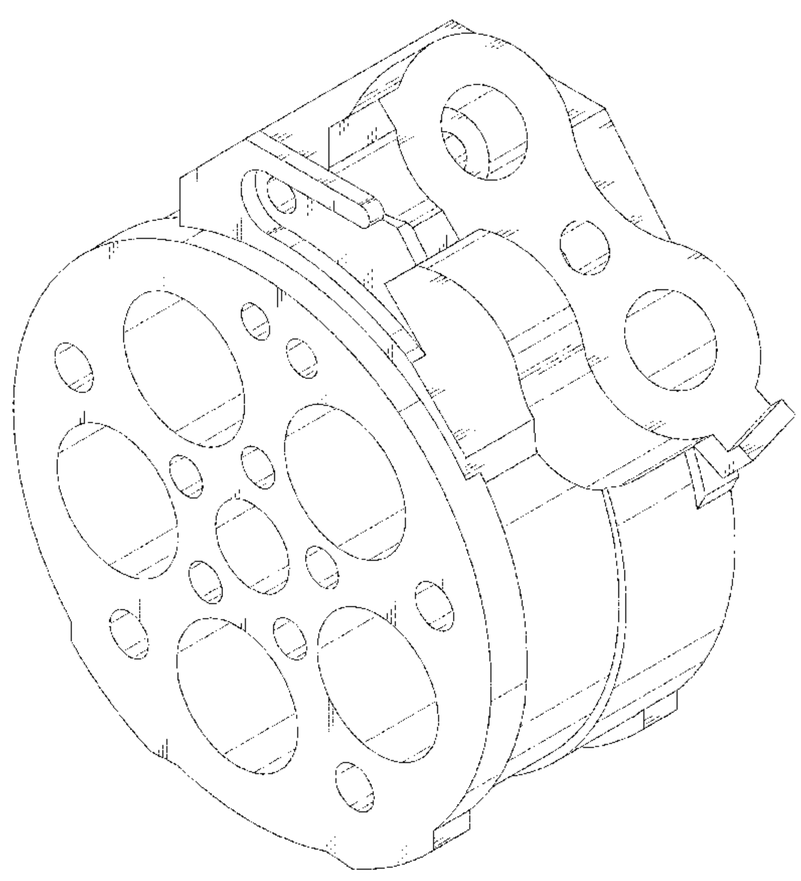

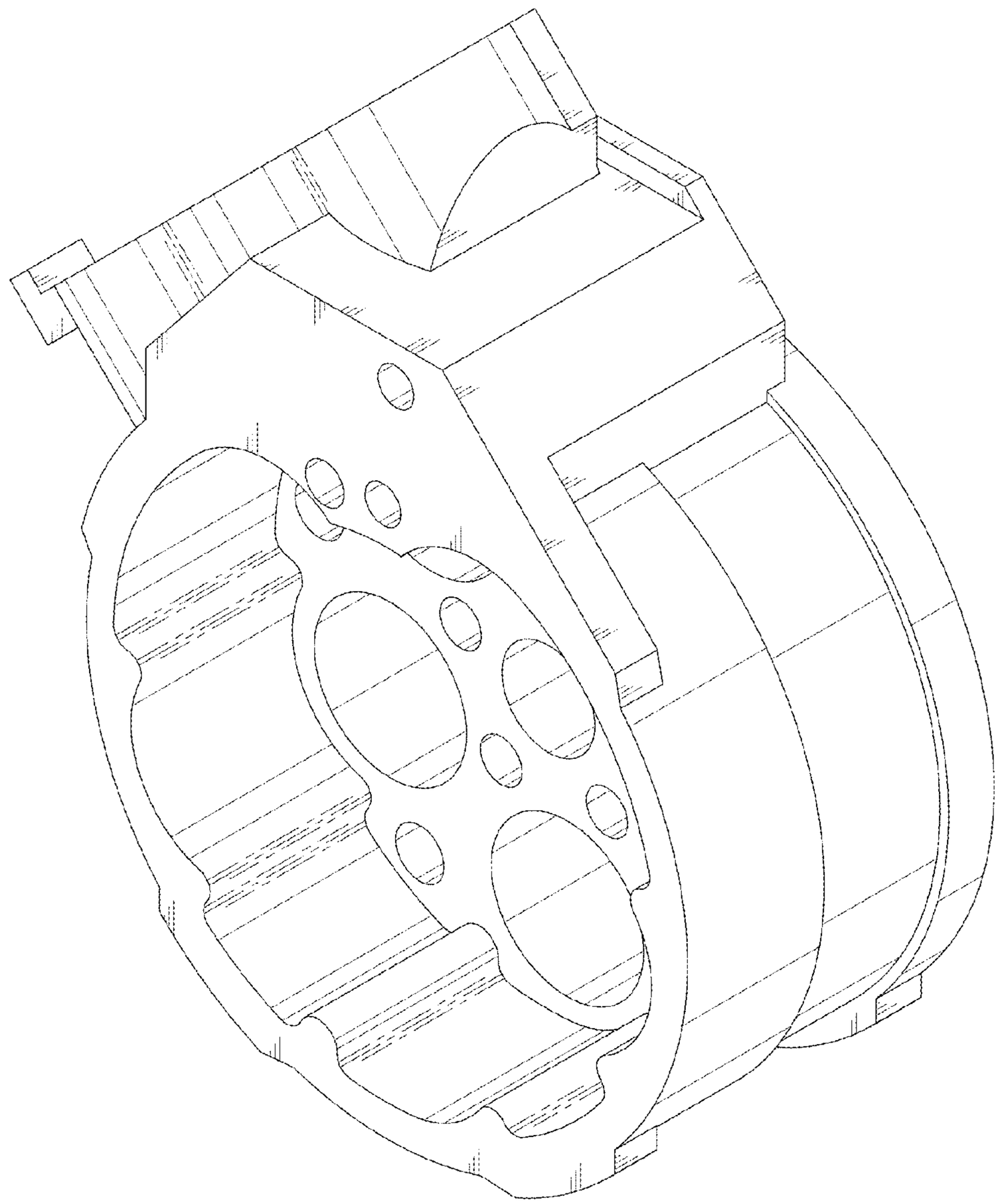

FIG. 1

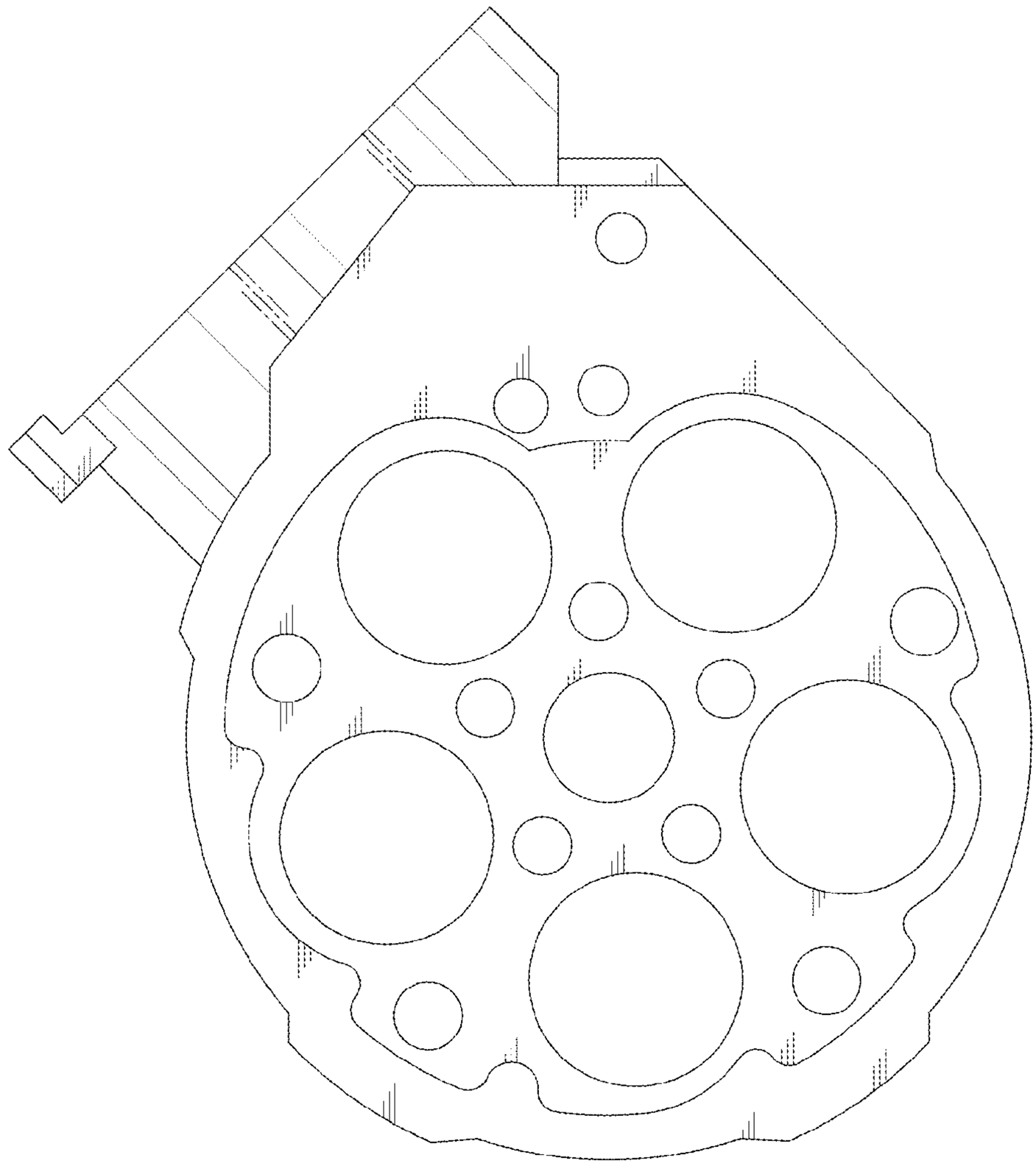

FIG. 2

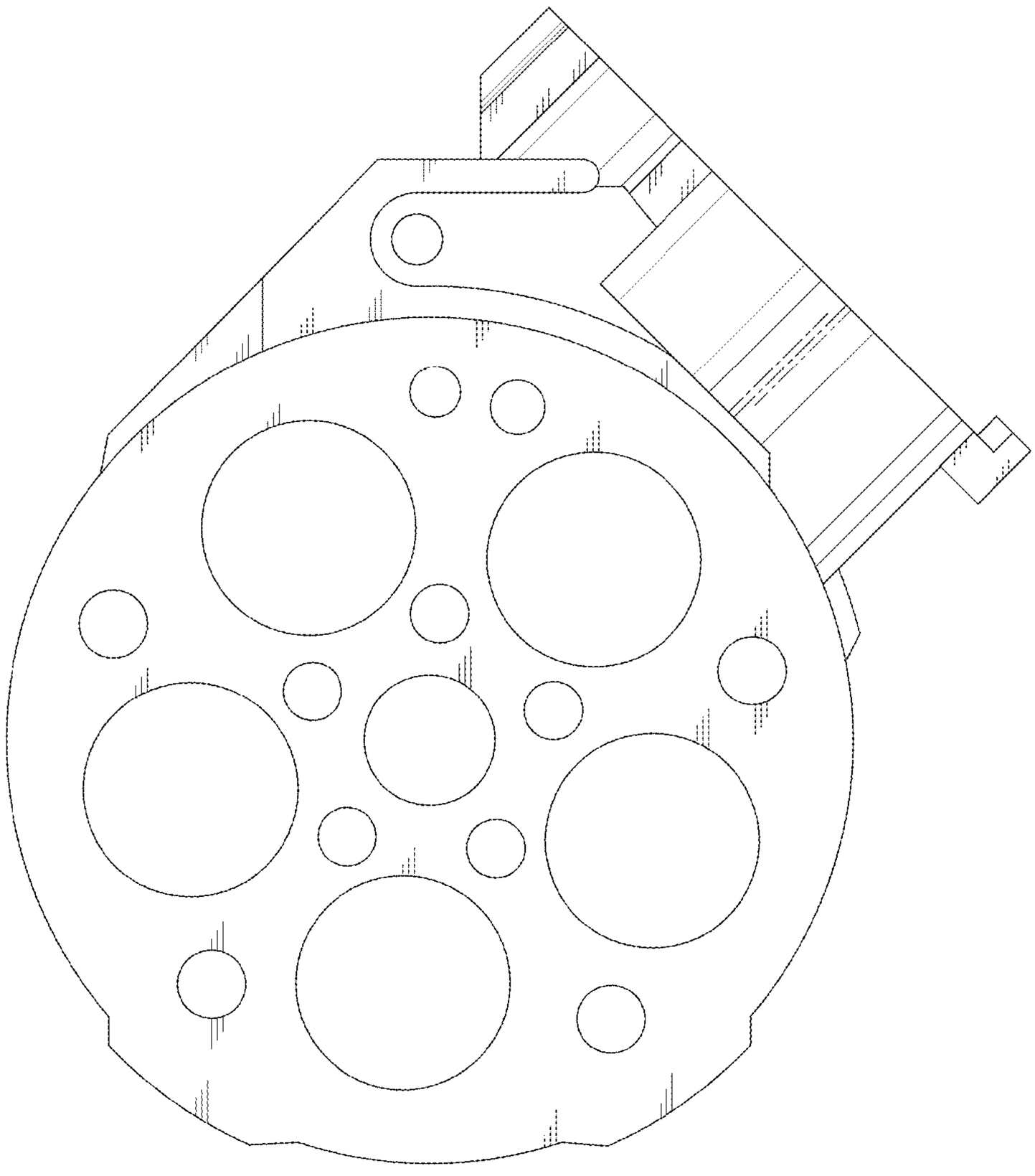

FIG. 3

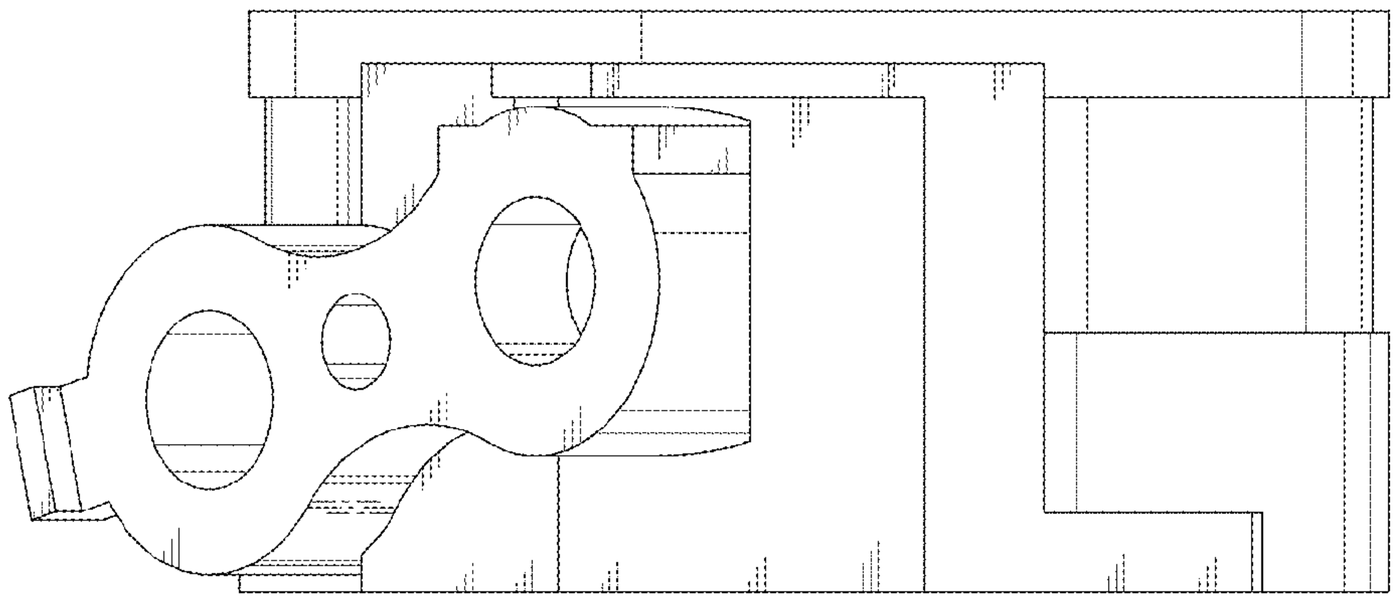

FIG. 4

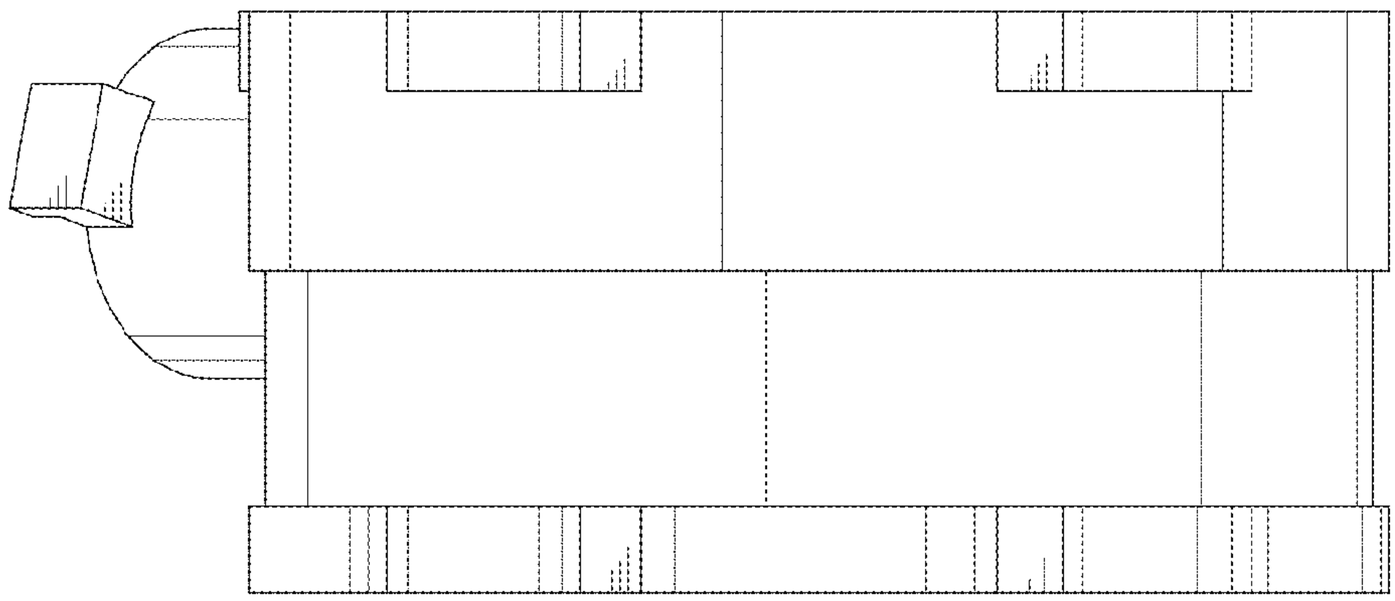

FIG. 5

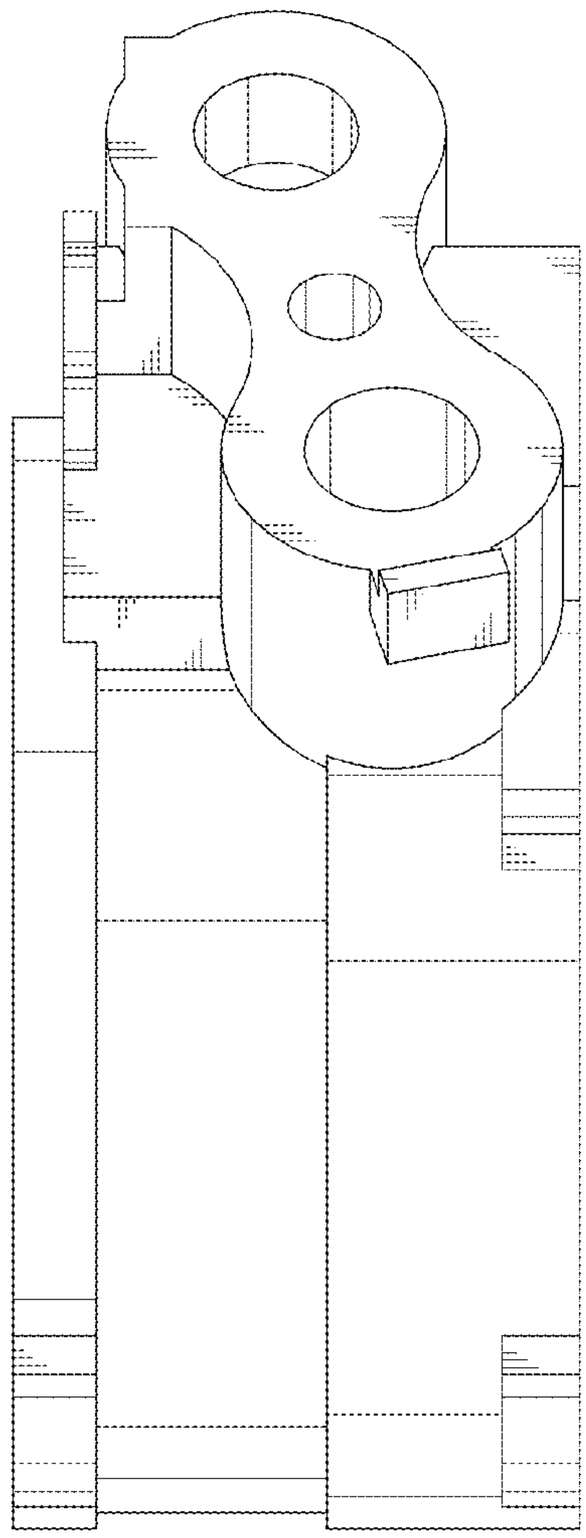

FIG. 6

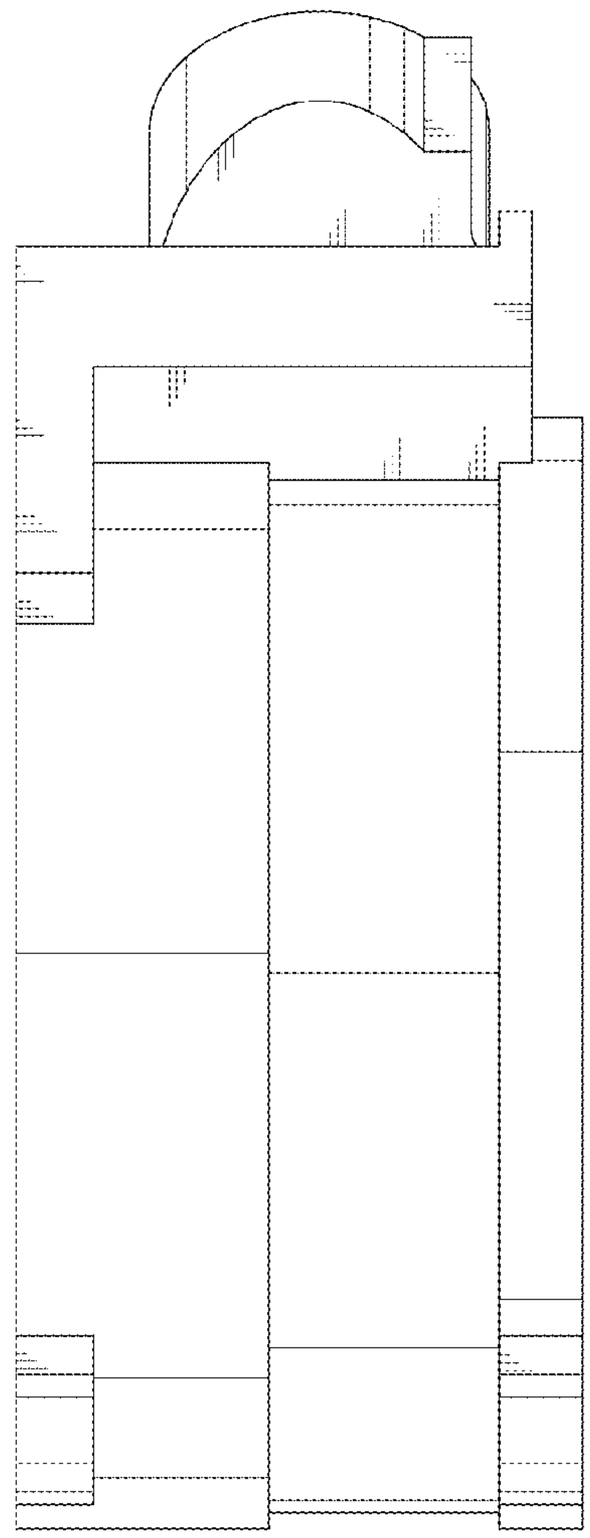

FIG. 7

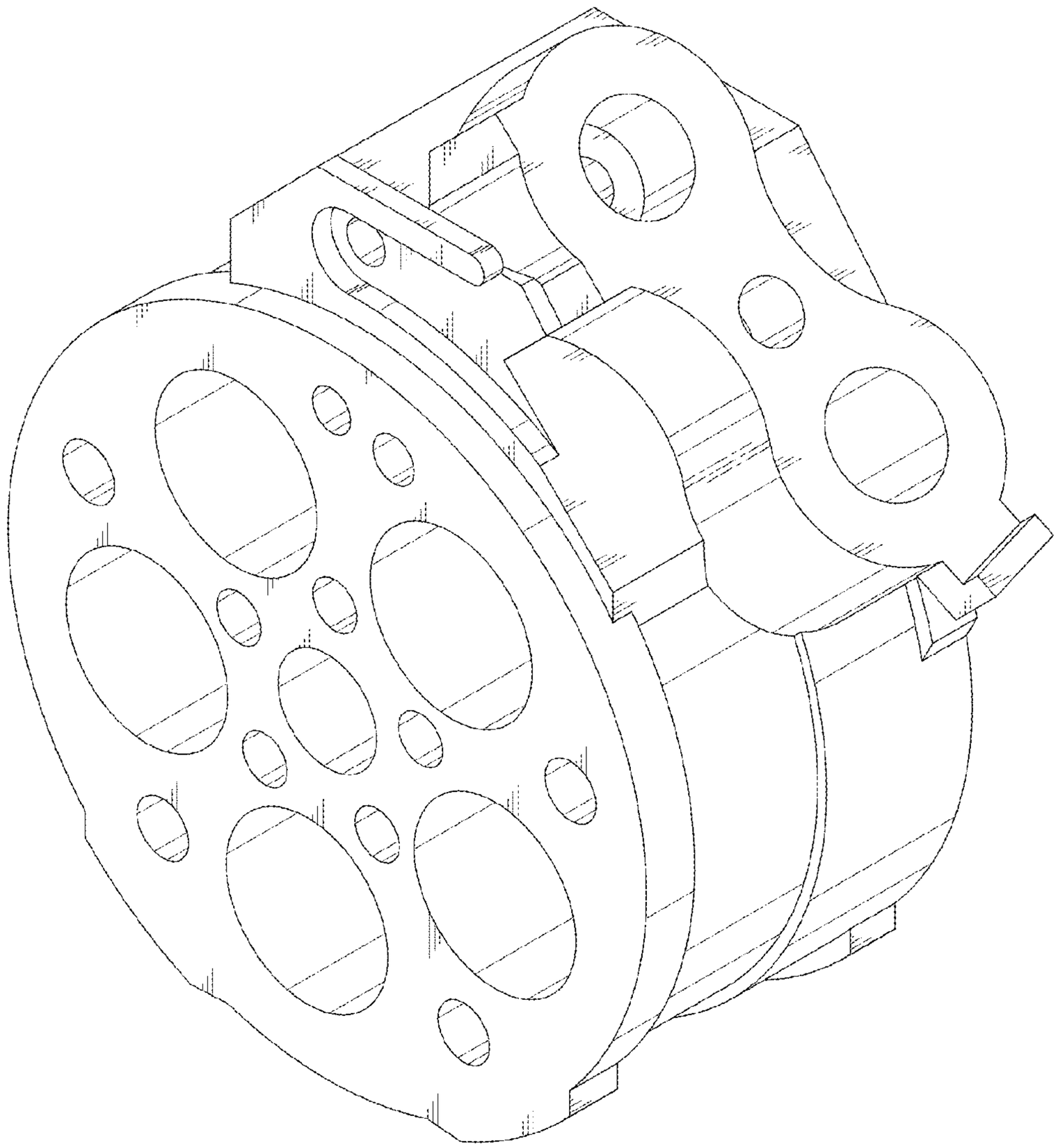

FIG. 8

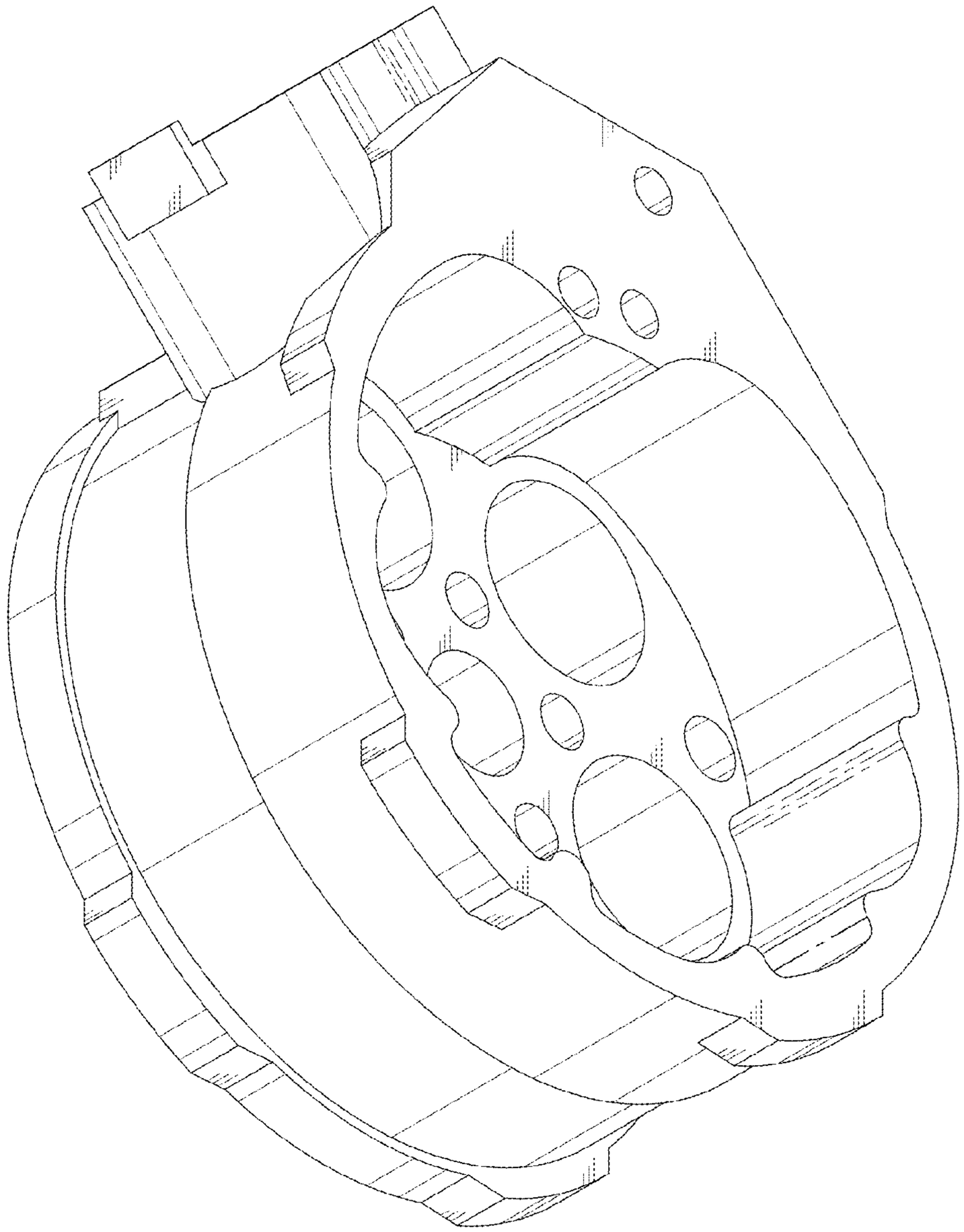

FIG. 9

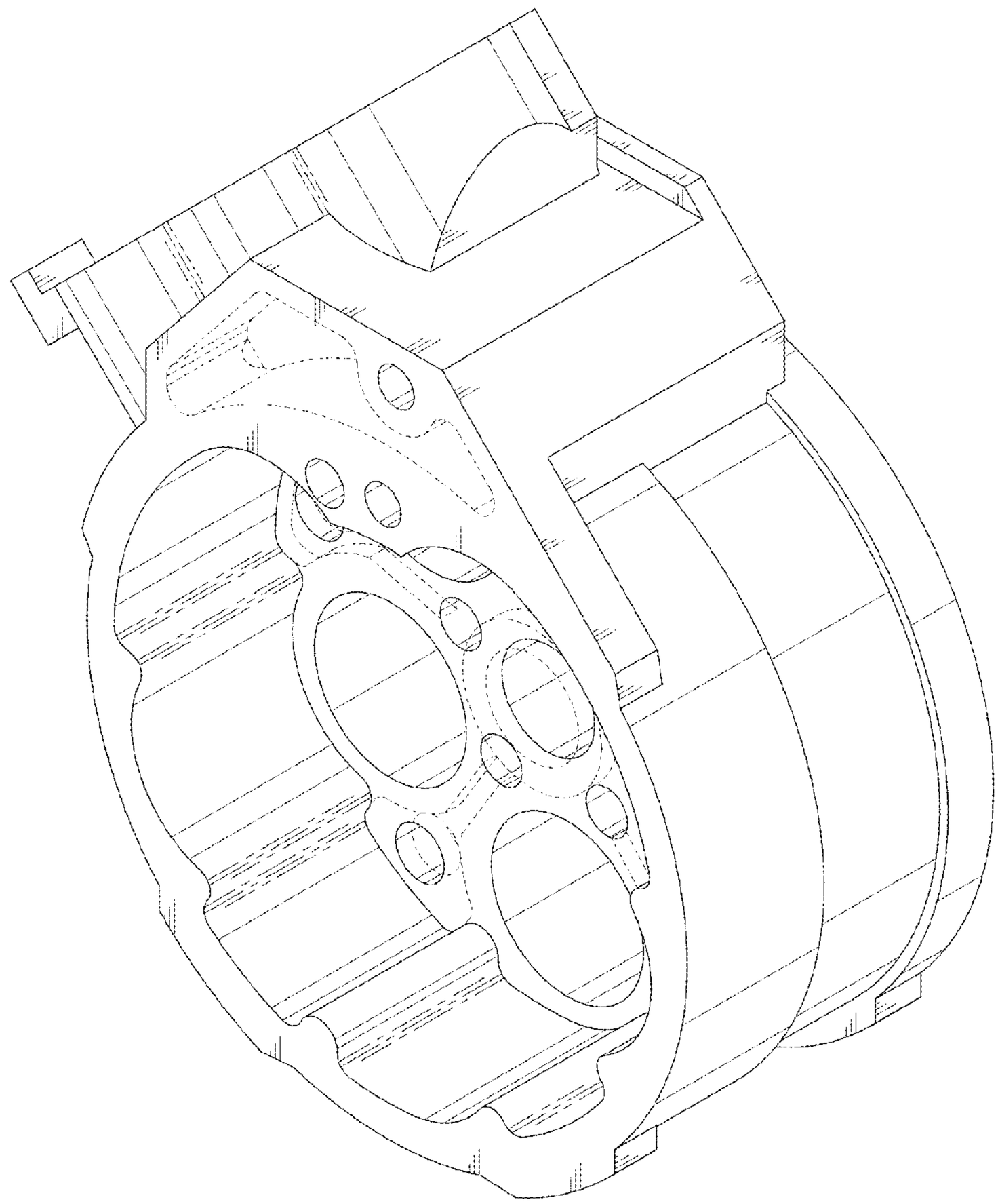

FIG. 10

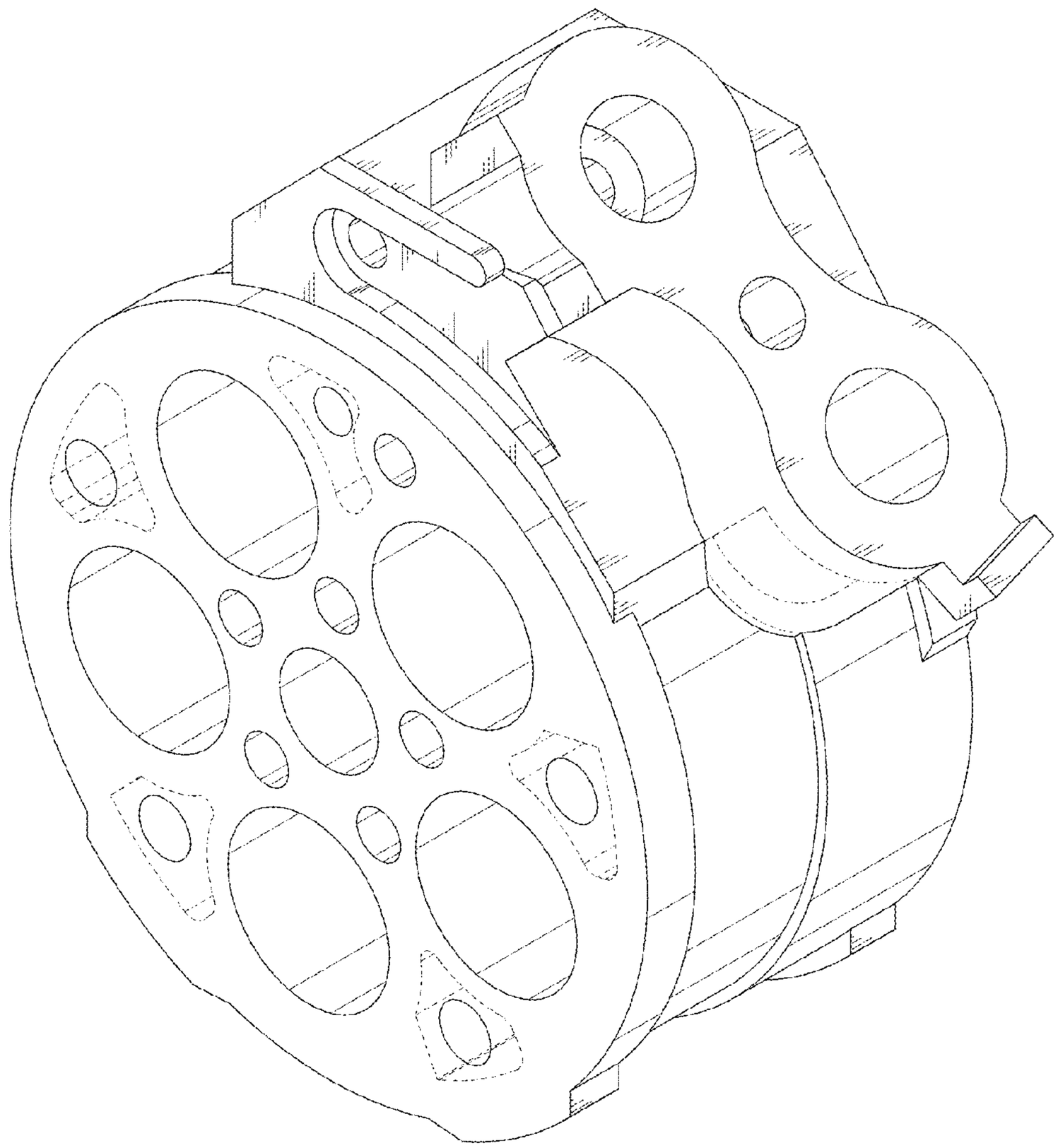

FIG. 11