US00D710556S

(12) United States Design Patent
Muzaffer

(10) Patent No.: US D710,556 S
(45) Date of Patent: ** Aug. 5, 2014

(54) **PET GATE**

(71) Applicant: **Samir Ali Muzaffer**, Centennial, CO (US)

(72) Inventor: **Samir Ali Muzaffer**, Centennial, CO (US)

(**) Term: **14 Years**

(21) Appl. No.: **29/479,800**

(22) Filed: **Jan. 20, 2014**

Related U.S. Application Data

(62) Division of application No. 29/439,940, filed on Dec. 17, 2012, now Pat. No. Des. 698,505.

(51) **LOC (10) Cl.** **30-99**

(52) **U.S. Cl.**
USPC **D30/199**; D30/108

(58) **Field of Classification Search**
USPC D30/108, 109, 114, 119, 199; D6/300, D6/332, 718.21; D20/10, 17, 39, 40, 41; D25/38.1, 35, 48.5, 149; 49/55, 169, 49/463, 465; 52/200, 202, 207, 507; 119/452, 474, 484, 498, 502, 512–514; 160/217, 218, 225, 130, 135; 256/24, 256/26, 73; 403/382
See application file for complete search history.

(56) **References Cited**

U.S. PATENT DOCUMENTS

534,389 A * 2/1895 Duncan 256/24
D82,779 S * 12/1930 Armstrong D25/149

(Continued)

Primary Examiner — Caron D Veynar
Assistant Examiner — Martie K Holtje
(74) *Attorney, Agent, or Firm* — Abigail Smith; Oppendahl Patent Law Firm LLC

(57) **CLAIM**

The ornamental design for a pet gate, as shown and described.

DESCRIPTION

FIG. **1** is a front elevation view of my new design for a pet gate, the rear elevation view being a mirror image thereof.
FIG. **2** is a left side elevation view of FIG. **1**.
FIG. **3** is a right side elevation view of FIG. **1**.
FIG. **4** is a top plan view of FIG. **1**.
FIG. **5** is a bottom plan view of FIG. **1**.
FIG. **6** is a front perspective view of FIG. **1**.
FIG. **7** is a front elevation view of a second embodiment of my new design for a pet gate, the rear elevation view being a mirror image thereof.
FIG. **8** is a left side elevation view of FIG. **7**.
FIG. **9** is a right side elevation view of FIG. **7**.
FIG. **10** is a top plan view of FIG. **7**.
FIG. **11** is a bottom plan view of FIG. **7**.
FIG. **12** is a front perspective view of FIG. **7**.
FIG. **13** is a front elevation view of a third embodiment of my new design for a pet gate, the rear elevation view being a mirror image thereof.
FIG. **14** is a left side elevation view of FIG. **13**.
FIG. **15** is a right side elevation view of FIG. **13**.
FIG. **16** is a top plan view of FIG. **13**.
FIG. **17** is a bottom plan view of FIG. **13**.
FIG. **18** is a front perspective view of FIG. **13**.
FIG. **19** is a front elevation view of a fourth embodiment of my new design for a pet gate, the rear elevation view being a mirror image thereof.
FIG. **20** is a left side elevation view of FIG. **19**.
FIG. **21** is a right side elevation view of FIG. **19**.
FIG. **22** is a top plan view of FIG. **19**.
FIG. **23** is a bottom plan view of FIG. **19**; and,
FIG. **24** is a front perspective view of FIG. **19**.

1 Claim, 7 Drawing Sheets

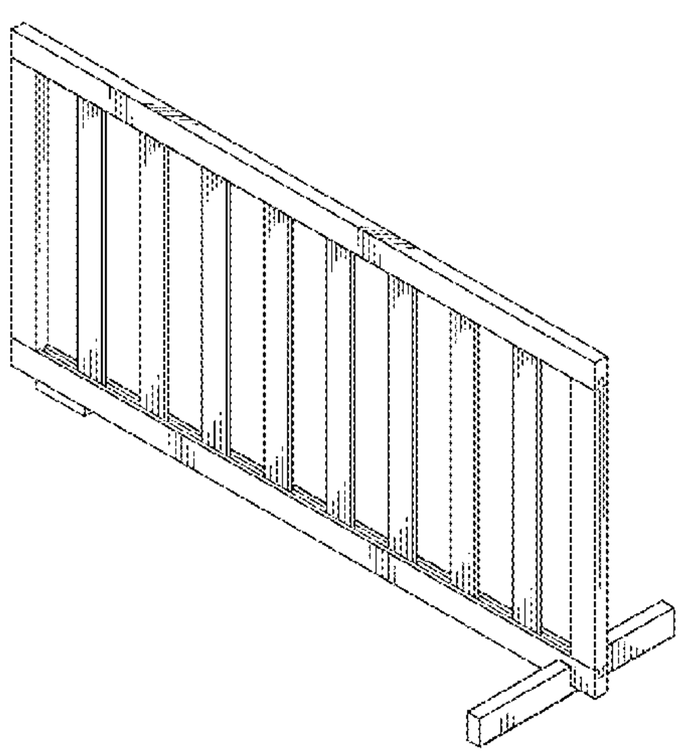

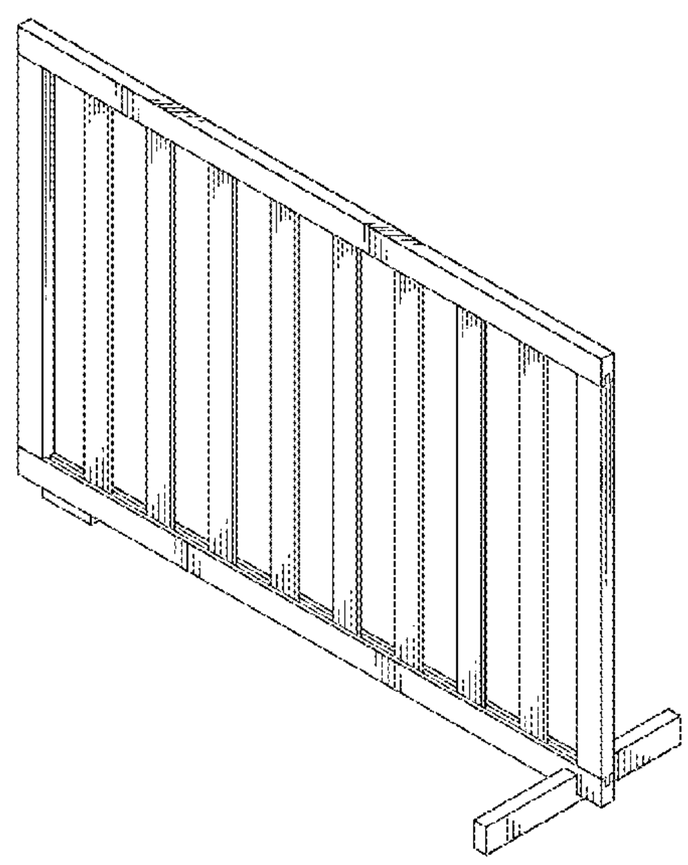

(56) **References Cited**

U.S. PATENT DOCUMENTS

2,577,034	A	*	12/1951	Quinlan	160/217
2,896,277	A	*	7/1959	Halligan	49/465
D208,534	S	*	9/1967	Blum et al.	D25/35
3,863,899	A	*	2/1975	Werner	256/24
D242,100	S	*	11/1976	Casey	D6/332
4,844,424	A	*	7/1989	Knudslien	256/26
5,603,585	A	*	2/1997	Bruchu et al.	403/382
D385,967	S	*	11/1997	Junell	D25/38.1
5,868,382	A	*	2/1999	Groves	256/73
6,016,629	A	*	1/2000	Sylvester et al.	49/55
D422,367	S	*	4/2000	Mishina	D25/38.1
6,112,460	A	*	9/2000	Wagnitz	49/55
6,152,081	A	*	11/2000	Baker	119/498
D472,331	S	*	3/2003	Zadak	D25/48.5
6,681,523	B1	*	1/2004	Stener	49/55
D502,550	S	*	3/2005	Walker	D25/38.1
D524,061	S	*	7/2006	Bruce	D6/300
D579,609	S	*	10/2008	Hirokawa et al.	D30/114
7,568,449	B2	*	8/2009	Hirokawa et al.	119/452
7,739,983	B2	*	6/2010	Hirokawa et al.	119/452
D620,608	S	*	7/2010	Deneyer	D25/38.1
7,954,456	B2	*	6/2011	Hirokawa et al.	119/452
8,074,969	B2	*	12/2011	Lee et al.	256/73
8,196,348	B2	*	6/2012	Flannery	49/55
2006/0081827	A1	*	4/2006	Strong et al.	256/24
2008/0110413	A1	*	5/2008	Kobayashi et al.	119/514
2008/0185566	A1	*	8/2008	Flannery	256/73
2009/0071074	A1	*	3/2009	Yates	49/55
2011/0198549	A1	*	8/2011	Hirokawa et al.	256/24
2012/0233922	A1	*	9/2012	Flannery et al.	49/55

* cited by examiner

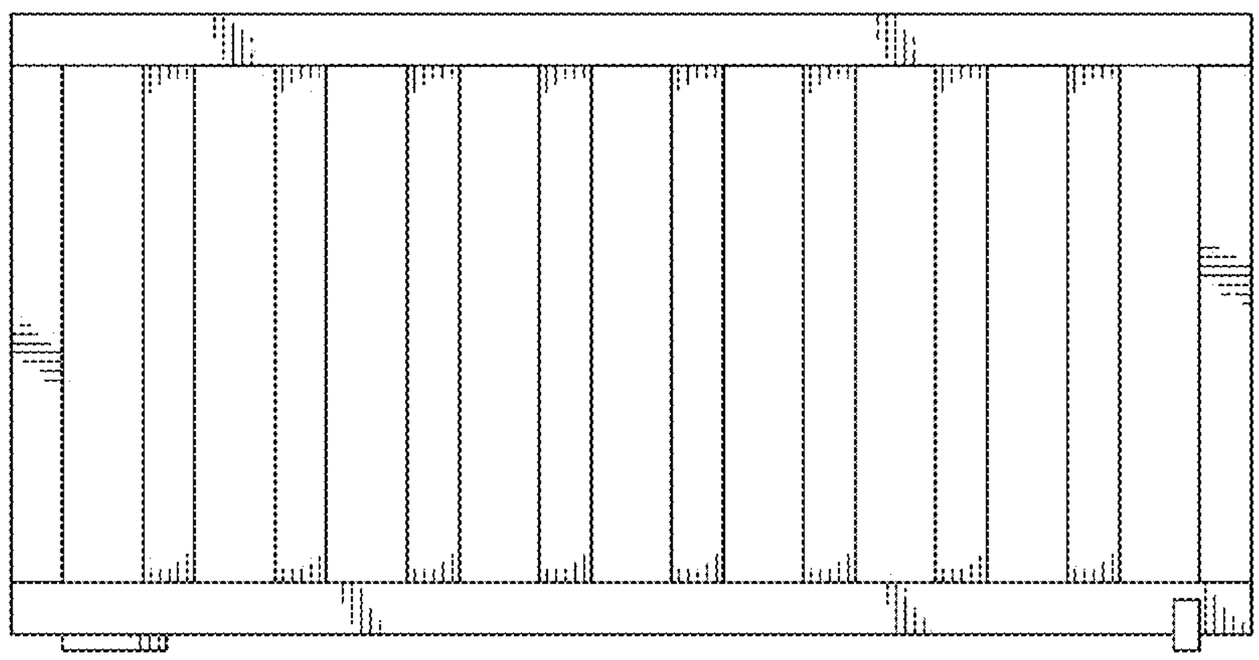

FIG.1

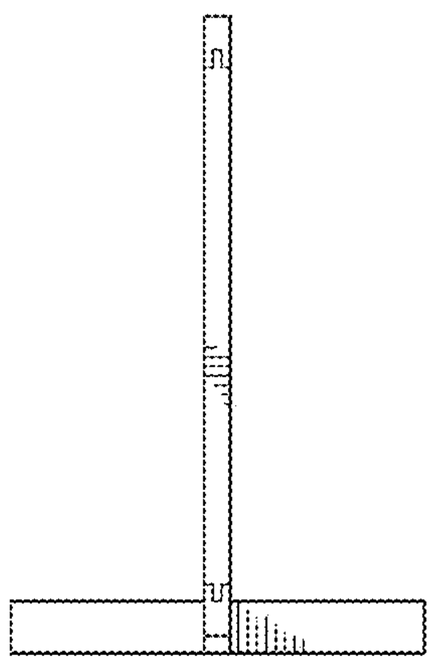

FIG.2

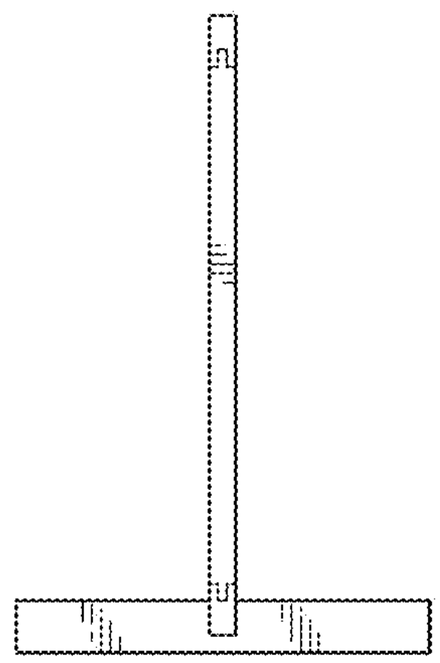

FIG.3

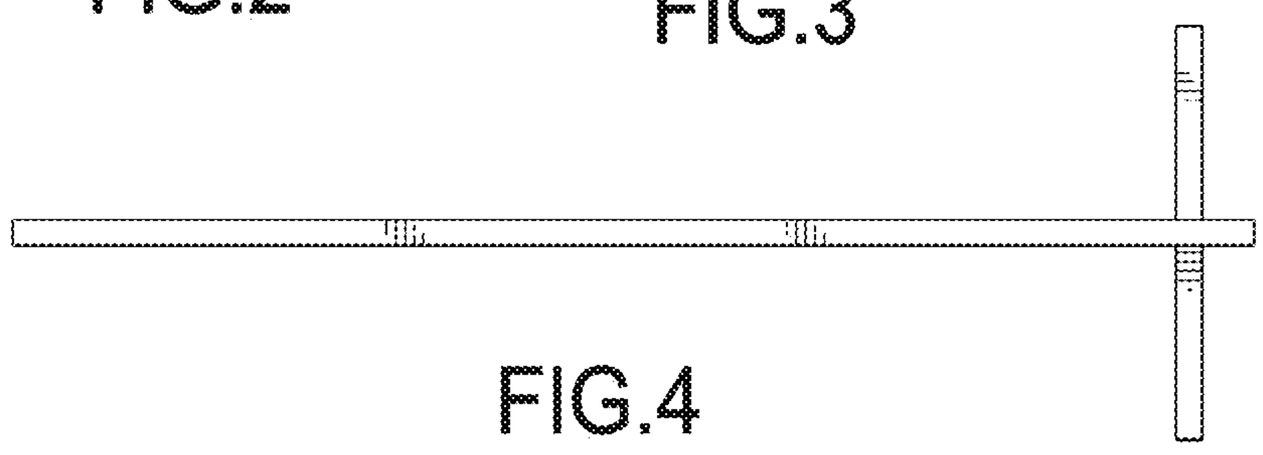

FIG.4

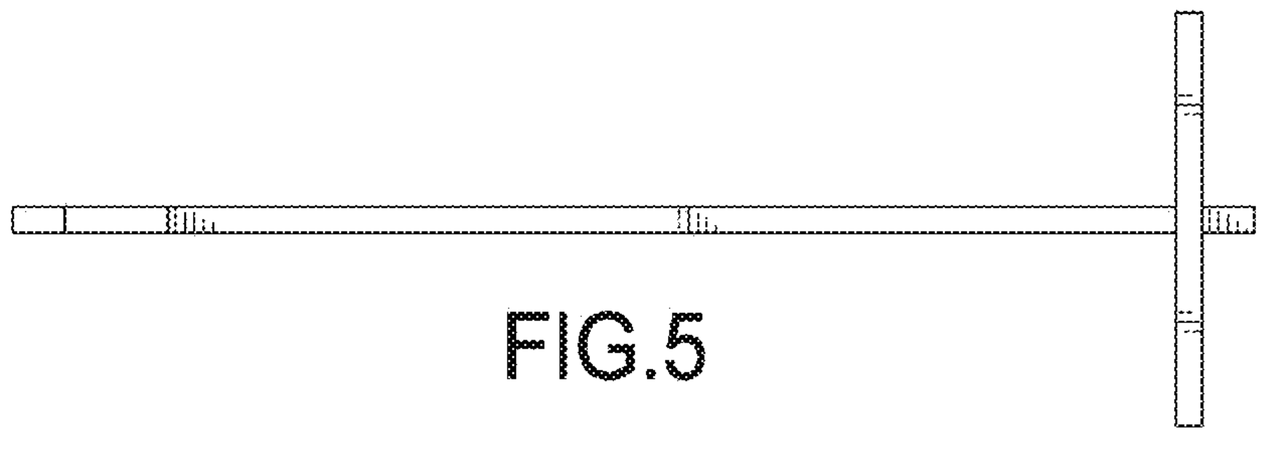

FIG.5

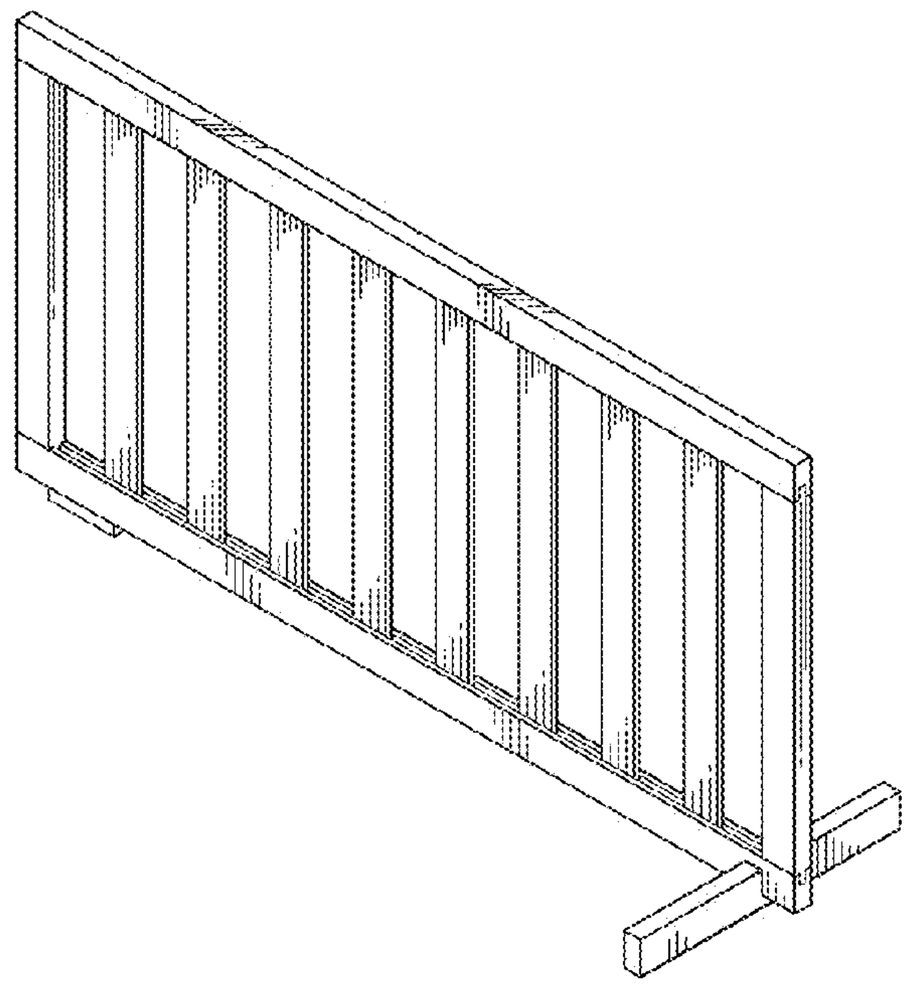

FIG.6

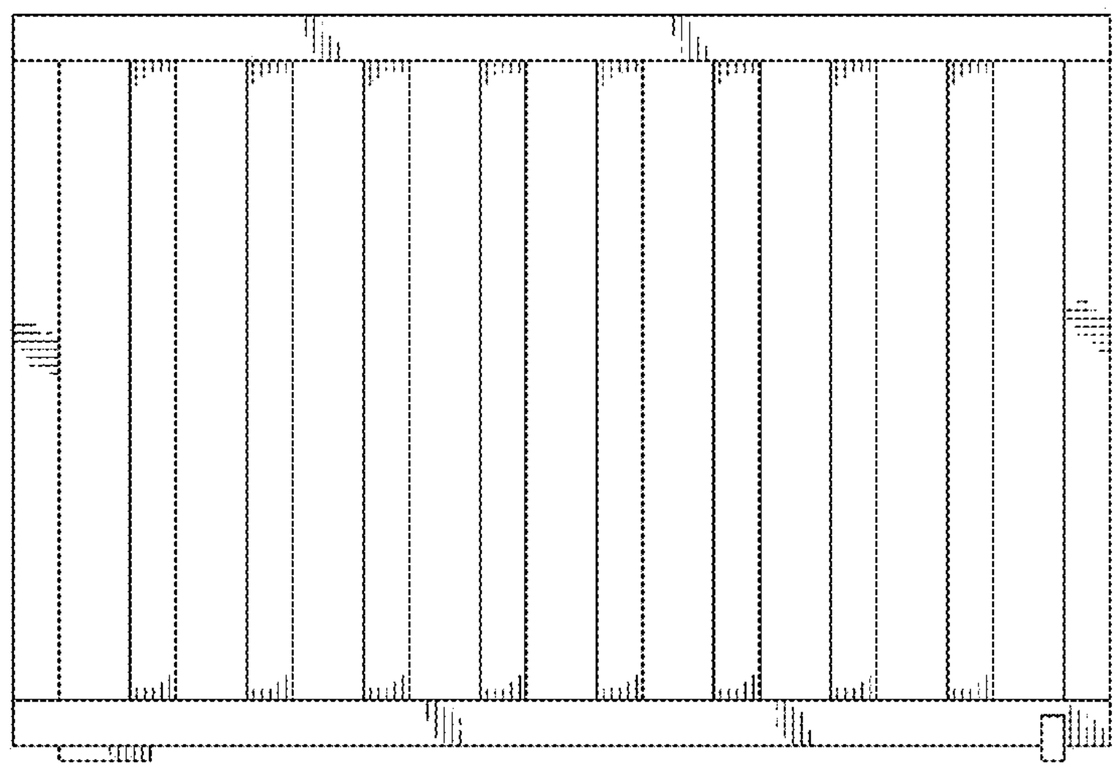

FIG.7

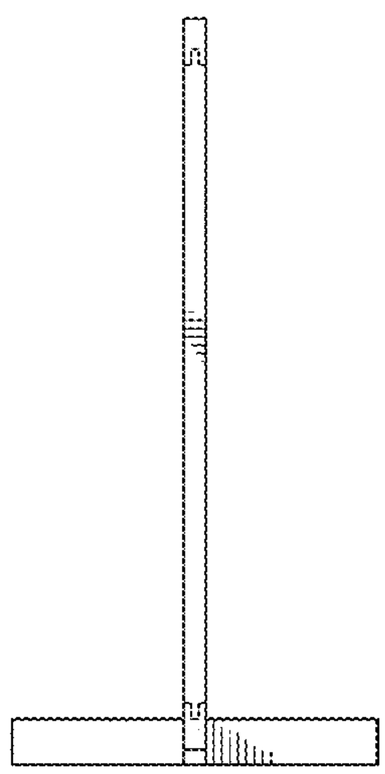

FIG.8

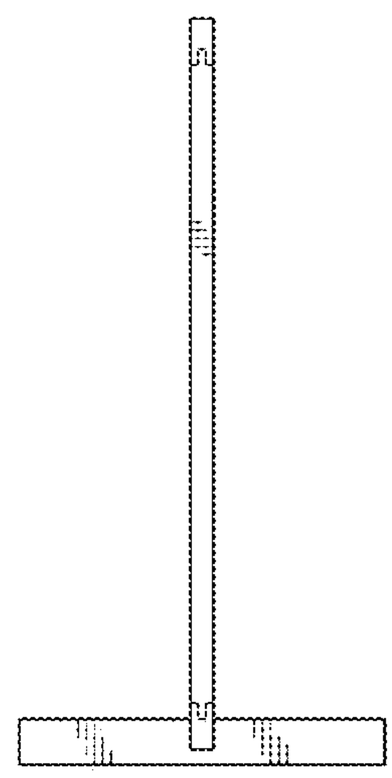

FIG.9

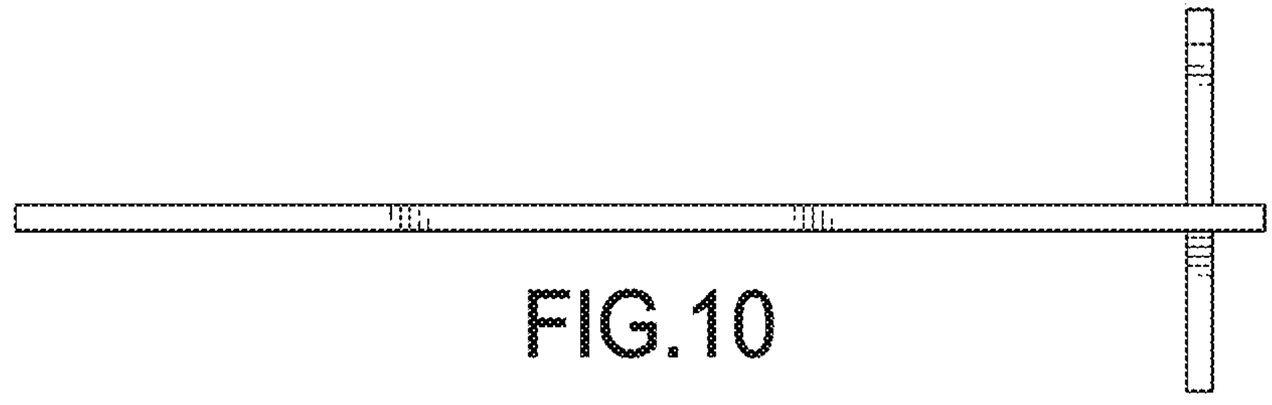

FIG.10

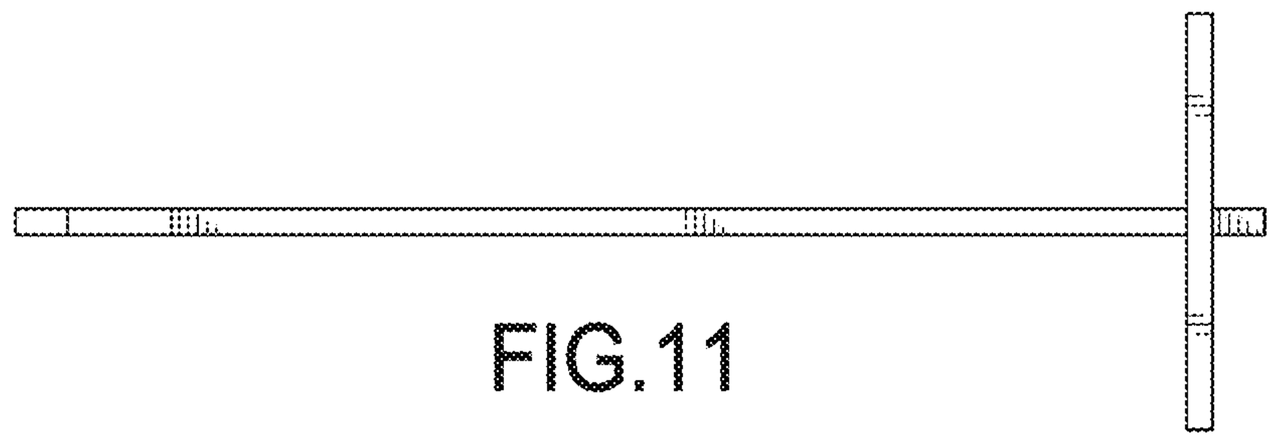

FIG.11

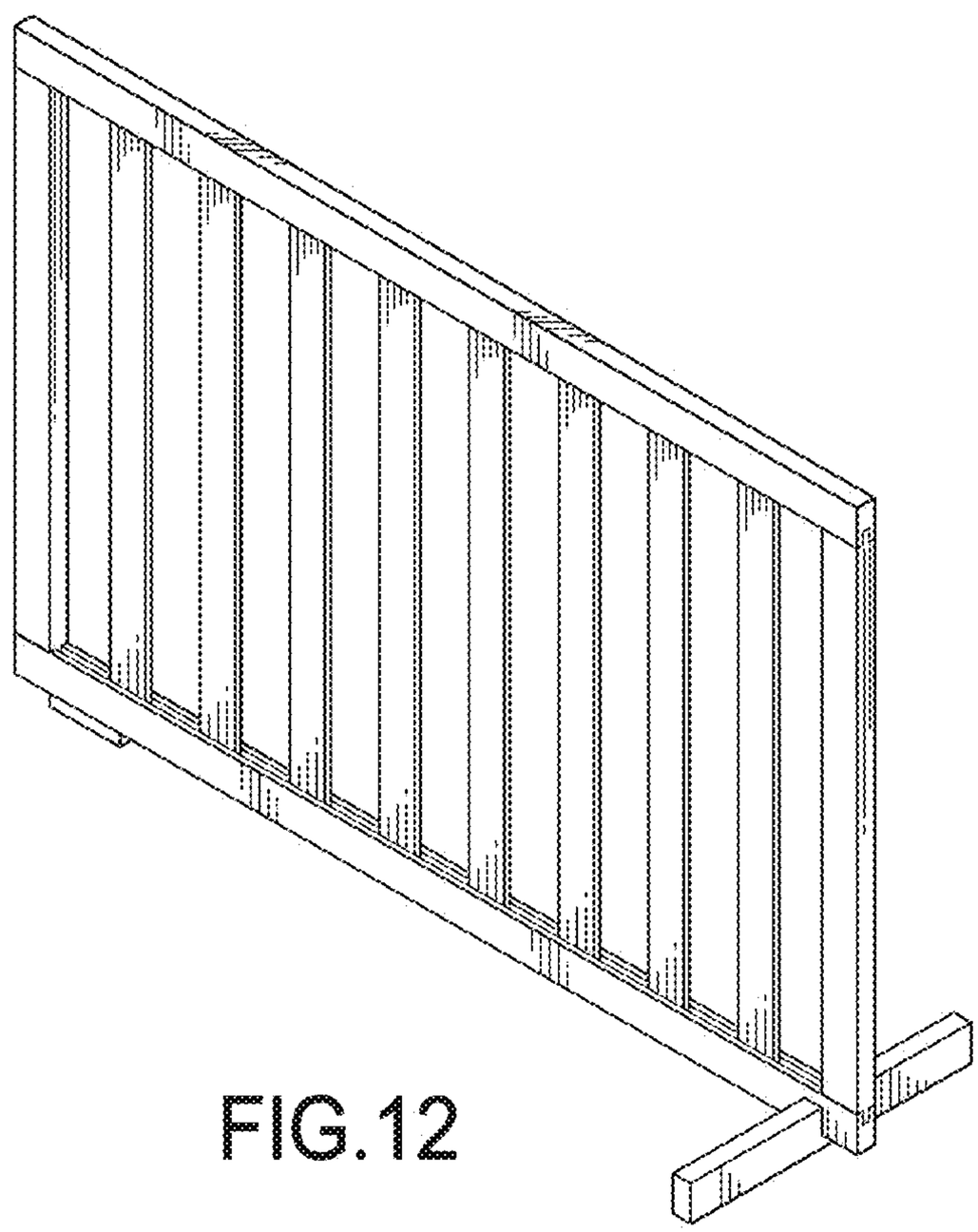

FIG.12

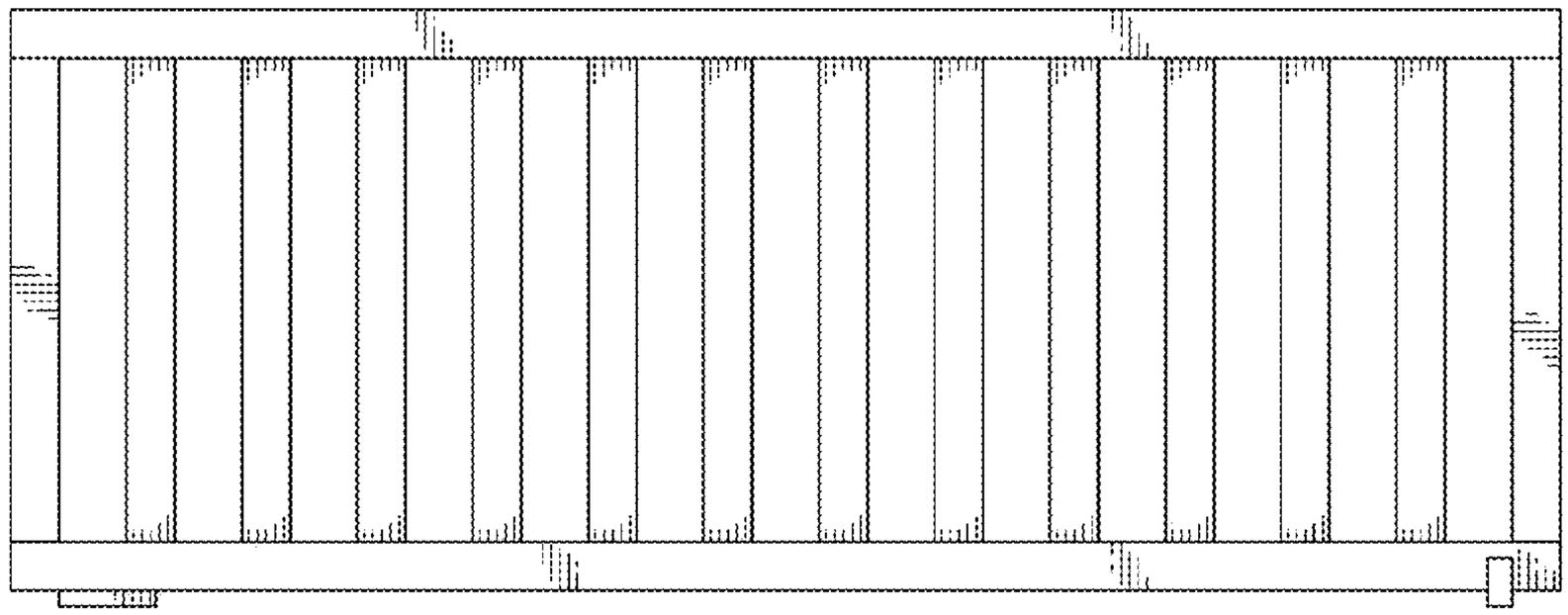

FIG.13

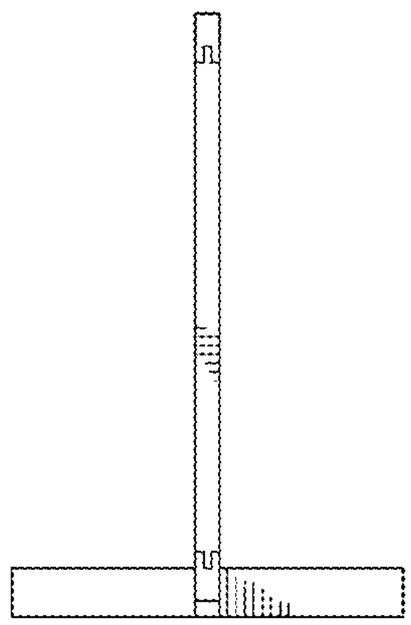

FIG.14

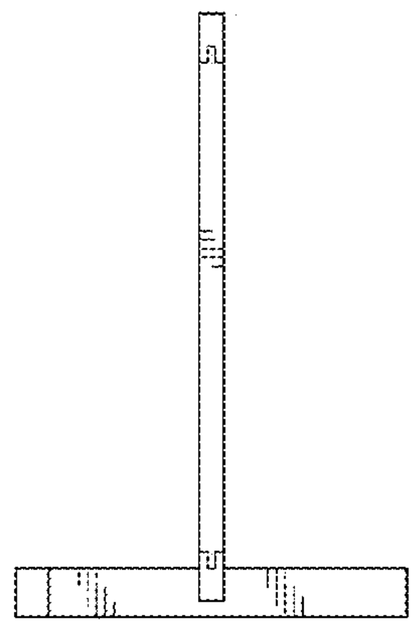

FIG.15

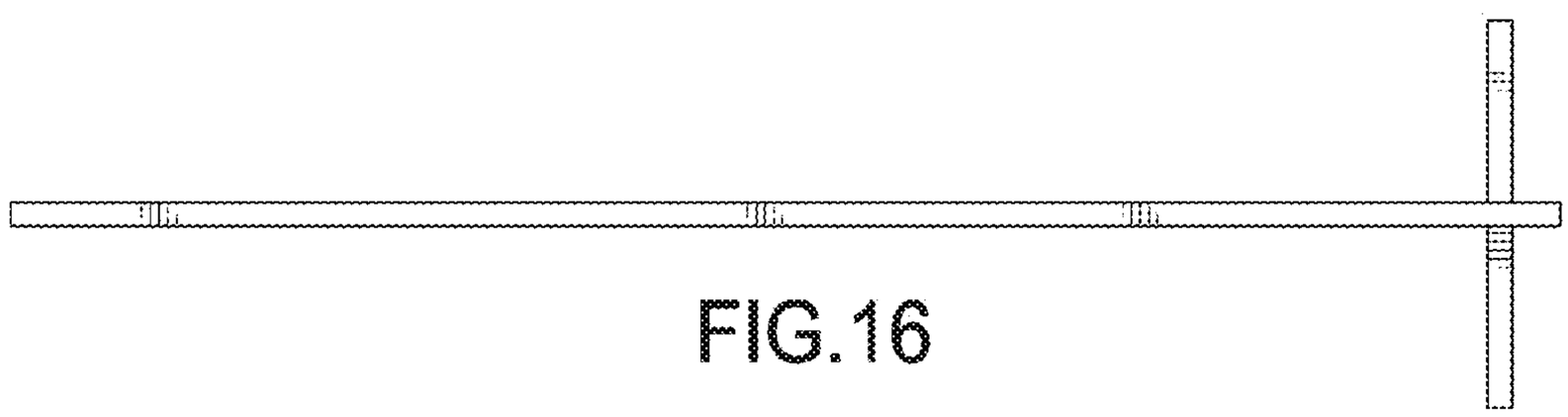

FIG.16

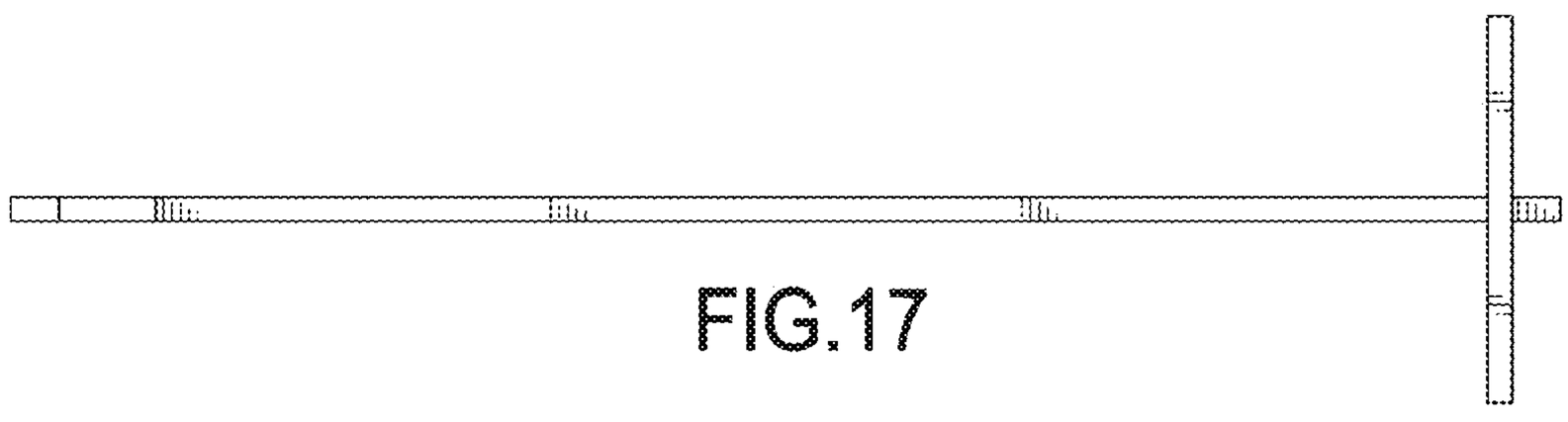

FIG.17

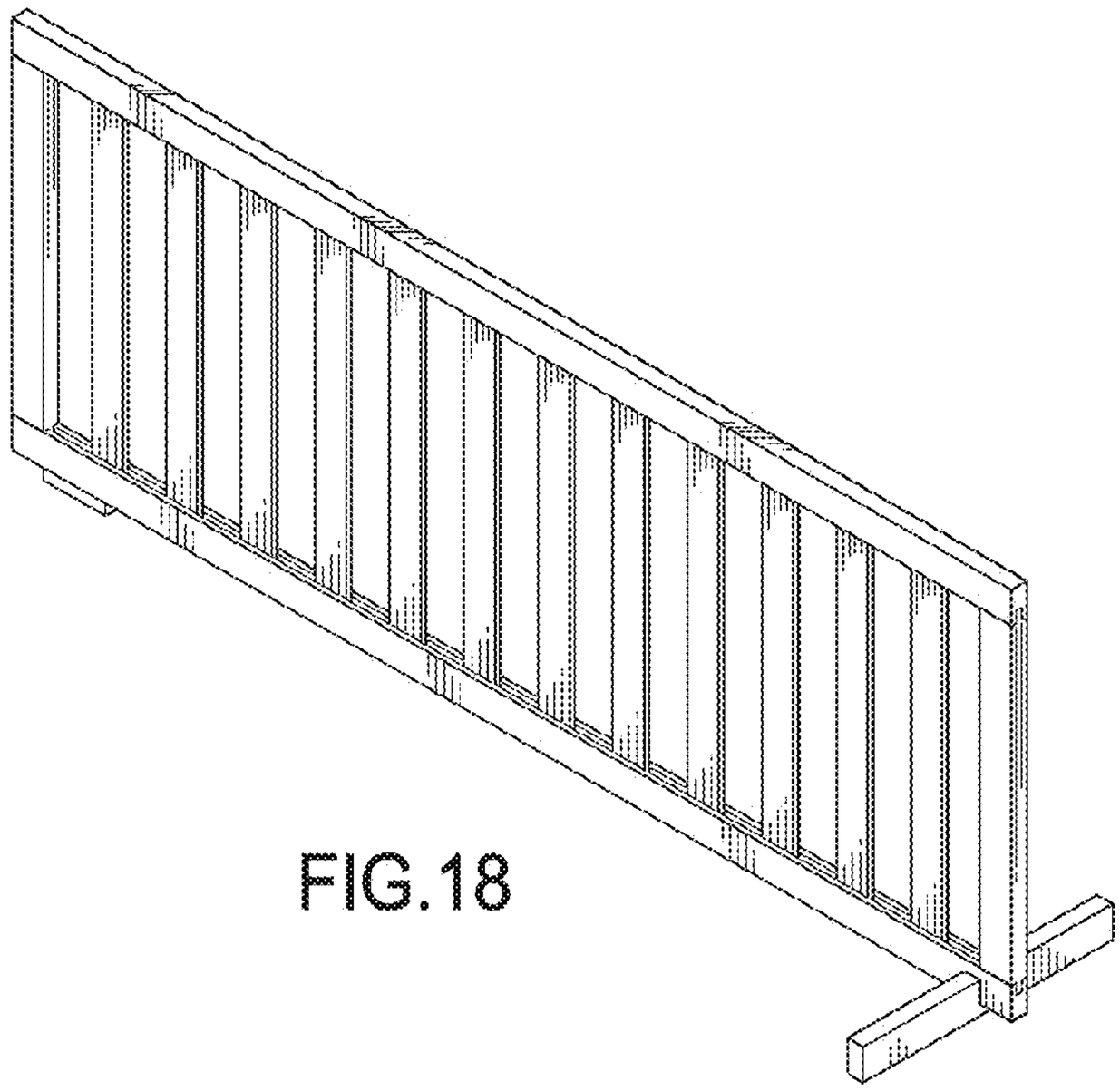

FIG.18

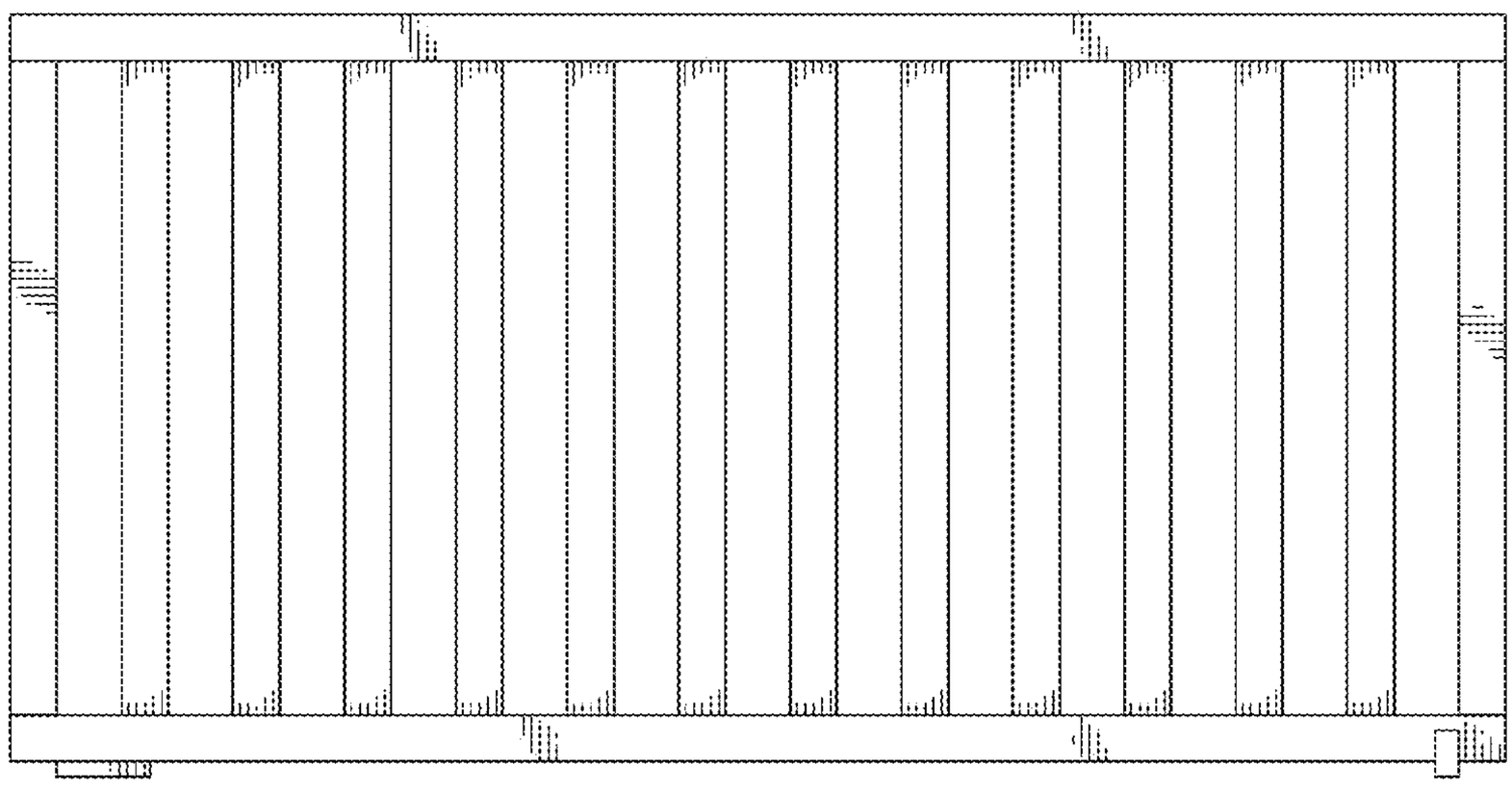

FIG.19

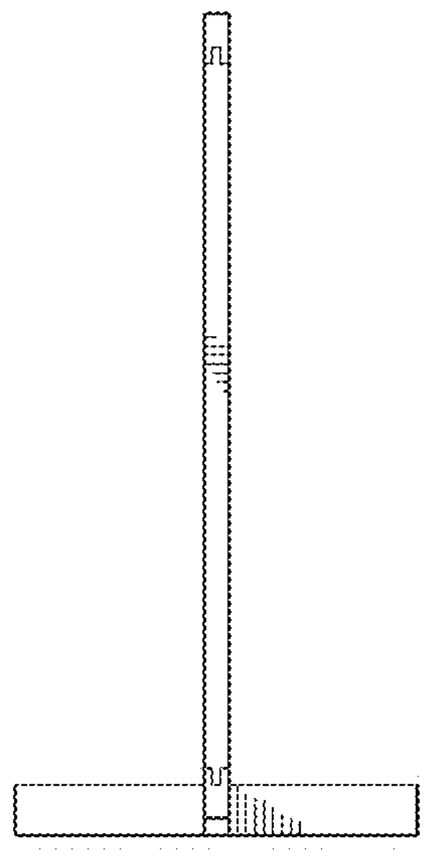

FIG.20

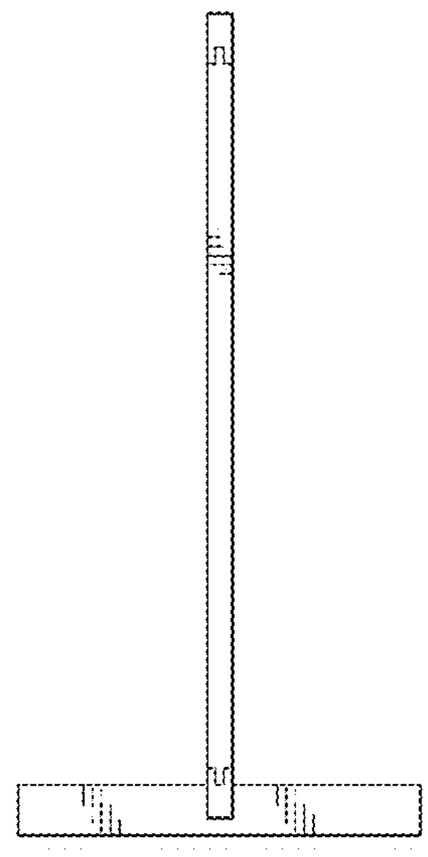

FIG.21

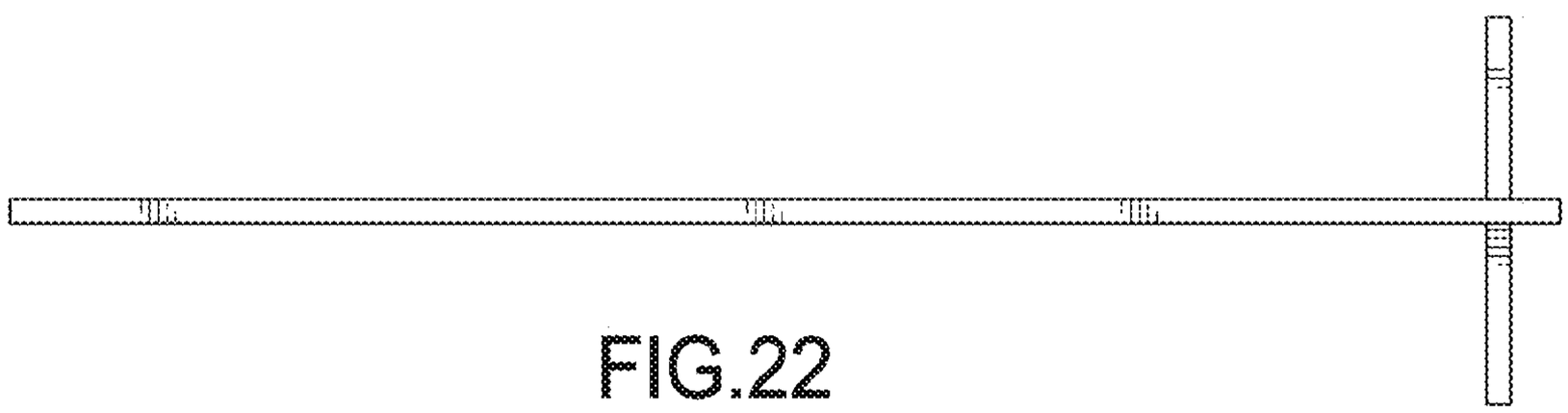

FIG.22

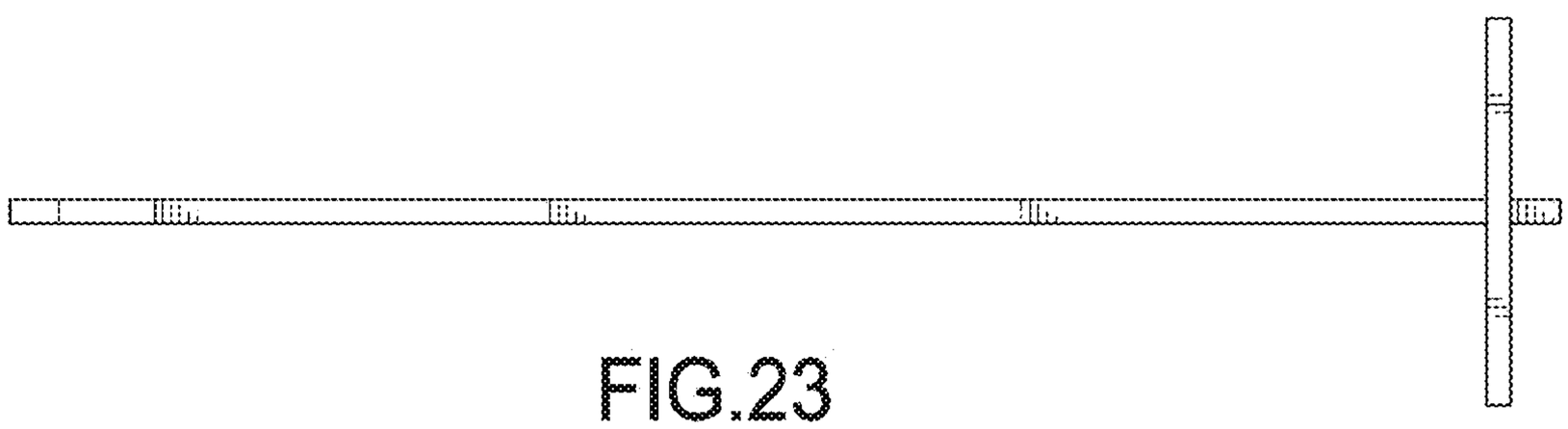

FIG.23

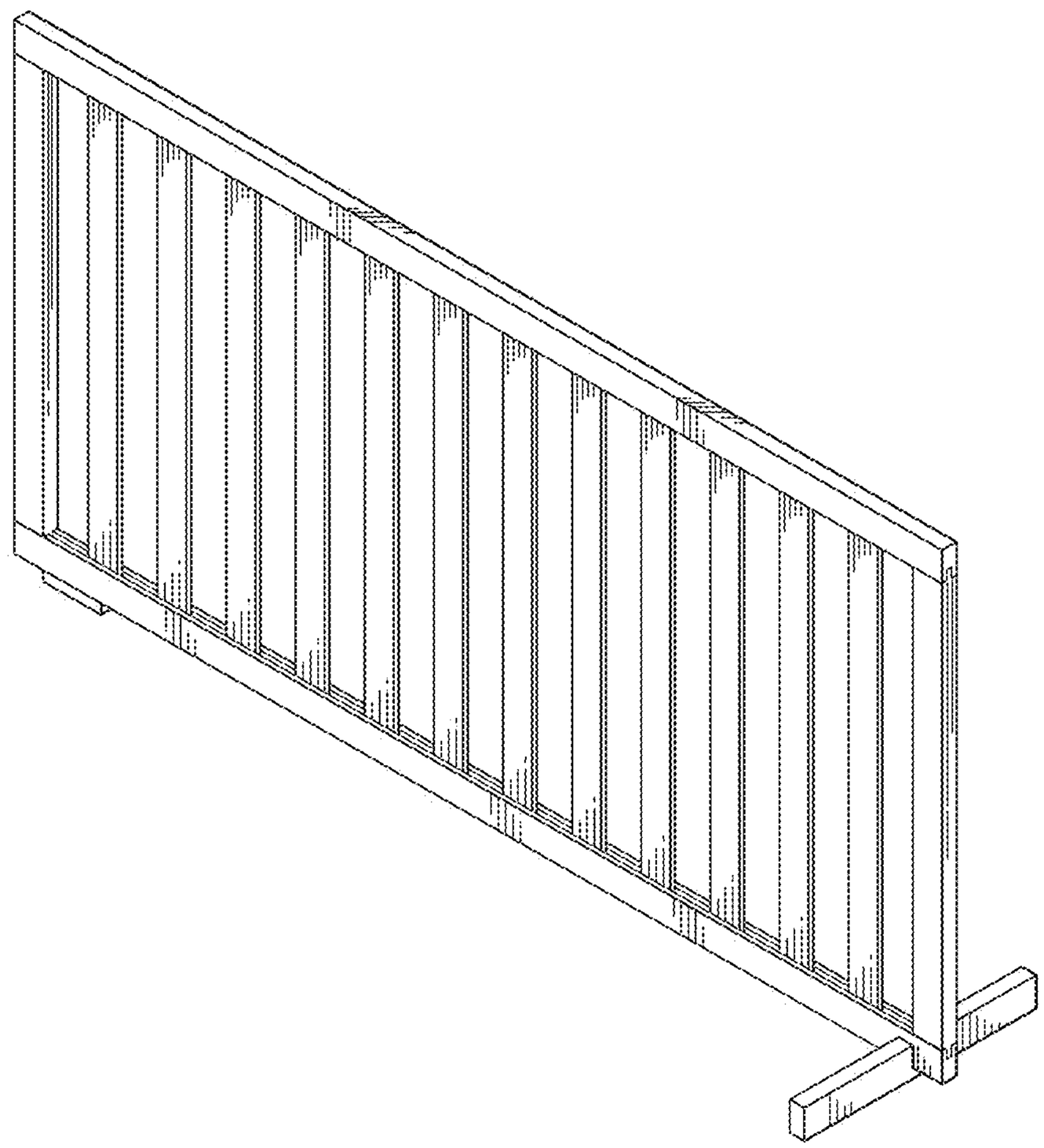

FIG.24

UNITED STATES PATENT AND TRADEMARK OFFICE

CERTIFICATE OF CORRECTION

PATENT NO. : D710,556 S
APPLICATION NO. : 29/479800
DATED : August 5, 2014
INVENTOR(S) : Samir Ali Muzaffer

It is certified that error appears in the above-identified patent and that said Letters Patent is hereby corrected as shown below:

Title Page, delete:
item "(74) Attorney, Agent, or Firm- Abigail Smith; Oppendahl Patent Law Firm LLC"

And insert the following correction:
-- (74) Attorney, Agent, or Firm- Abigail Smith; Oppedahl Patent Law Firm LLC --

Signed and Sealed this
Thirtieth Day of September, 2014

Michelle K. Lee

Michelle K. Lee
Deputy Director of the United States Patent and Trademark Office