US00D709364S

(12) United States Design Patent

Olsson et al.

(10) Patent No.: US D709,364 S
(45) Date of Patent: ** Jul. 22, 2014

(54) **PACKAGING ASSEMBLY**

(71) Applicant: **Google Inc.**, Mountain View, CA (US)

(72) Inventors: **Maj Isabelle Olsson**, San Francisco, CA (US); **Matthew Wyatt Martin**, Ross, CA (US); **Mitchell Joseph Heinrich**, San Francisco, CA (US)

(73) Assignee: **Google Inc.**, Mountain View, CA (US)

(**) Term: **14 Years**

(21) Appl. No.: **29/445,456**

(22) Filed: **Feb. 12, 2013**

(51) **LOC (10) Cl.** **09-03**

(52) **U.S. Cl.**
USPC **D9/432**

(58) **Field of Classification Search**
USPC D9/414, 416, 418, 420–424, 430–434, D9/455–456, 721; D3/272, 273, 294–296, D3/302; 206/267, 269, 270, 273, 299, 737, 206/740, 822; 229/100, 101, 101.3, 106, 229/108–122; D7/601–603
See application file for complete search history.

(56) **References Cited**

U.S. PATENT DOCUMENTS

1,315,593	A		9/1919	Binder	
1,518,219	A		12/1924	Peter	
D114,891	S	*	5/1939	Fogel	D9/418
3,850,333	A		11/1974	Reichert	
D280,290	S		8/1985	Bakus	
4,542,822	A		9/1985	Kennedy, Jr. et al.	
4,606,459	A		8/1986	Luray	
D329,601	S	*	9/1992	Samelson	D9/721
D369,295	S	*	4/1996	Kobari et al.	D9/423
D385,781	S	*	11/1997	Levine et al.	D9/737
5,967,327	A		10/1999	Jones	
6,010,006	A		1/2000	Ridgeway et al.	
D433,630	S	*	11/2000	Lubineau-Bigot et al.	D9/416
D514,810	S	*	2/2006	Armato	D3/294
D572,588	S	*	7/2008	Osborn et al.	D9/456
D576,873	S	*	9/2008	Kim	D9/418
D594,743	S	*	6/2009	Lukka	D9/433
D596,485	S	*	7/2009	Andre et al.	D9/737
D606,859	S	*	12/2009	Stewart	D9/432
D609,115	S	*	2/2010	Kim	D9/721
D609,116	S	*	2/2010	Kim	D9/721
D611,837	S	*	3/2010	Kim	D9/721
D620,795	S	*	8/2010	Andre et al.	D9/432
D622,590	S	*	8/2010	Tayama	D9/432
D626,831	S	*	11/2010	Nicholas	D9/432
D674,709	S	*	1/2013	Akana et al.	D9/737
D685,654	S	*	7/2013	Akana et al.	D9/737
D687,295	S	*	8/2013	Park	D9/420

* cited by examiner

Primary Examiner — Susan Bennett Hattan
Assistant Examiner — Vy Koenig
(74) *Attorney, Agent, or Firm* — Lerner, David, Littenberg, Krumholz & Mentlik, LLP

(57) **CLAIM**

The ornamental design for a packaging assembly, as shown and described.

DESCRIPTION

FIG. **1** is a front perspective view of a packaging assembly according to our design shown in an assembled and closed configuration thereof;
FIG. **2** is a front elevation view of the packaging assembly of FIG. **1**;
FIG. **3** is a back elevation view of the packaging assembly of FIG. **1**;
FIG. **4** is a right elevation view of the packaging assembly of FIG. **1**;
FIG. **5** is a left elevation view of the packaging assembly of FIG. **1**;
FIG. **6** is a top elevation view of the packaging assembly of FIG. **1**;
FIG. **7** is a bottom elevation view of the packaging assembly of FIG. **1**;
FIG. **8** is an exploded perspective view of the packaging assembly of FIG. **1** shown in combination with unclaimed structures with which the design may be used;
FIG. **9** is a front perspective view of the packaging assembly of FIG. **1** in a first partially assembled configuration;

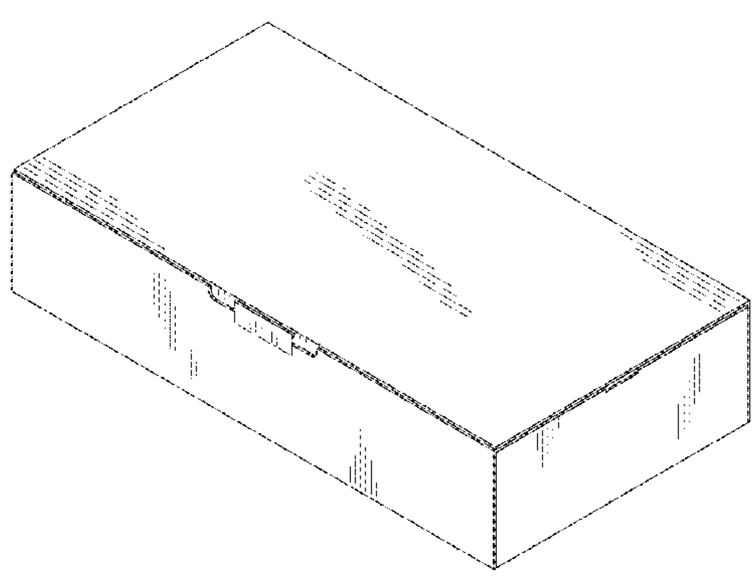

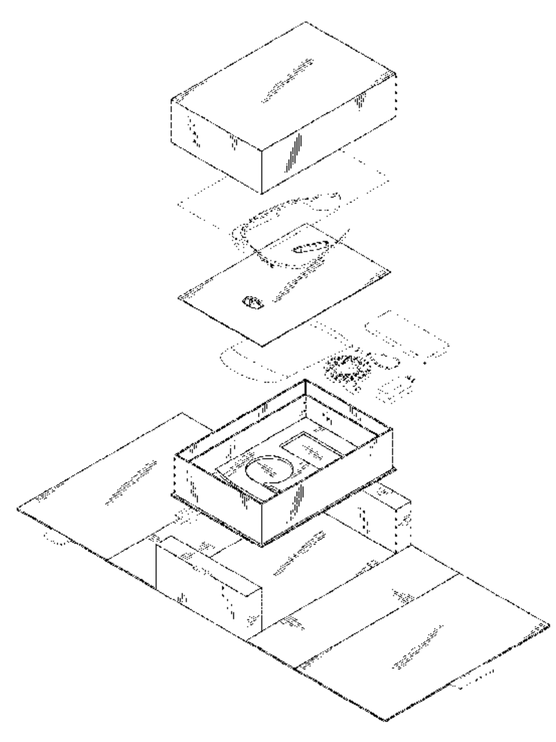

FIG. **10** is a front elevation view of the packaging assembly of FIG. **9**;
FIG. **11** is a back elevation view of the packaging assembly of FIG. **9**;
FIG. **12** is a right side elevation view of the packaging assembly of FIG. **9**;
FIG. **13** is a left side elevation view of the packaging assembly of FIG. **9**;
FIG. **14** is a top elevation view of the packaging assembly of FIG. **9**;
FIG. **15** is a bottom elevation view of the packaging assembly of FIG. **9**;
FIG. **16** is a front perspective view of one portion of the packaging assembly of FIG. **1**;
FIG. **17** is a front elevation view of the packaging assembly portion of FIG. **16**;
FIG. **18** is a back elevation view of the packaging assembly portion of FIG. **16**;
FIG. **19** is a right elevation view of the packaging assembly portion of FIG. **16**;
FIG. **20** is a left elevation view of the packaging assembly portion of FIG. **16**;
FIG. **21** is a top elevation view of the packaging assembly portion of FIG. **16**;
FIG. **22** is a bottom elevation view of the packaging assembly portion of FIG. **16**;
FIG. **23** is a front perspective view of the packaging assembly of FIG. **1** in a second partially assembled configuration;
FIG. **24** is a front elevation view of the packaging assembly of FIG. **23**;
FIG. **25** is a back elevation view of the packaging assembly of FIG. **23**;
FIG. **26** is a right side elevation view the packaging assembly of FIG. **23**;
FIG. **27** is a left side elevation view of the packaging assembly of FIG. **23**;
FIG. **28** is a top elevation view of the packaging assembly of FIG. **23**; and,
FIG. **29** is a bottom elevation view of the packaging assembly of FIG. **23**.
Broken lines illustrate features that are environmental only and form no part of the claimed design.

1 Claim, 19 Drawing Sheets

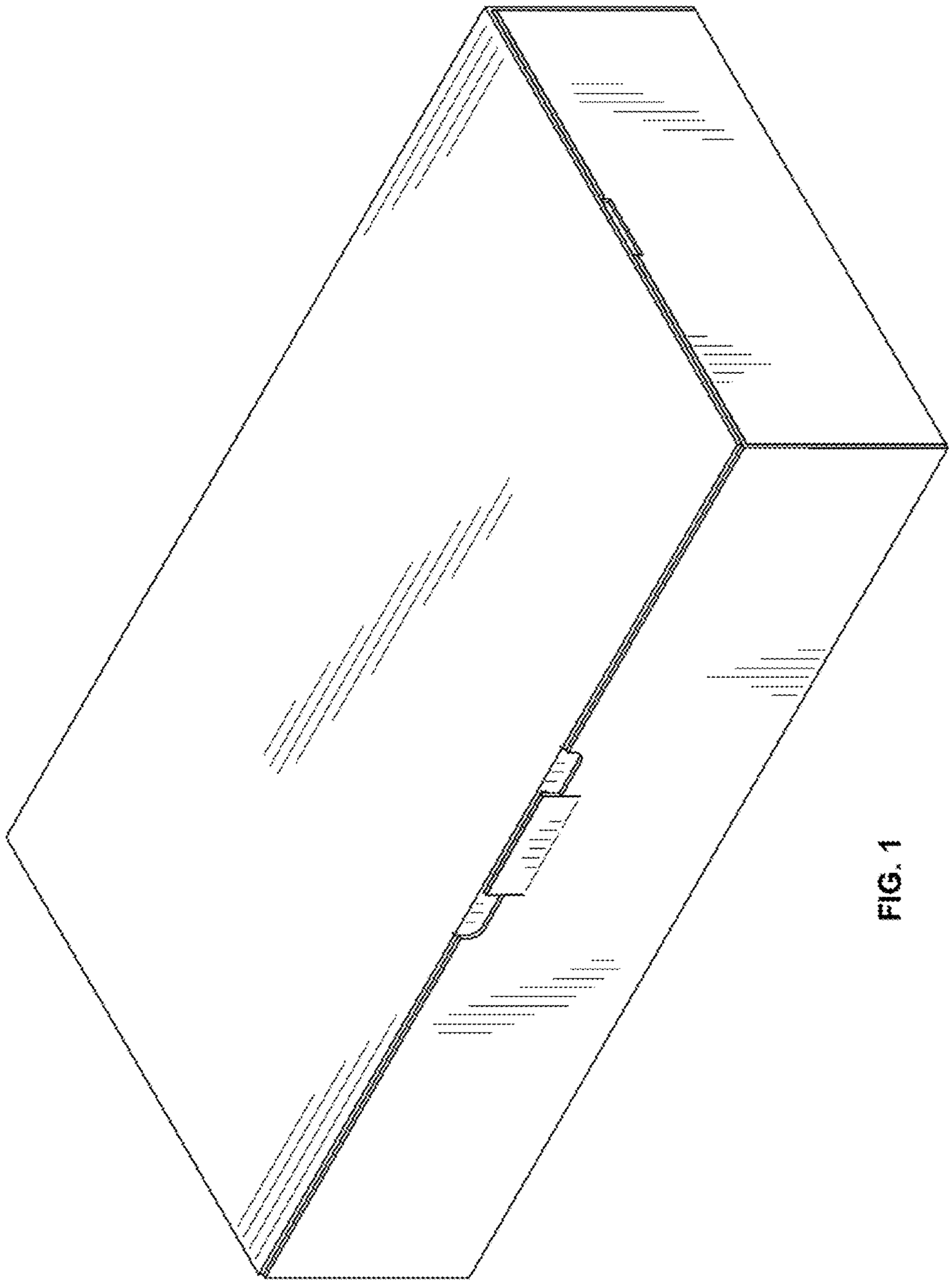

FIG. 1

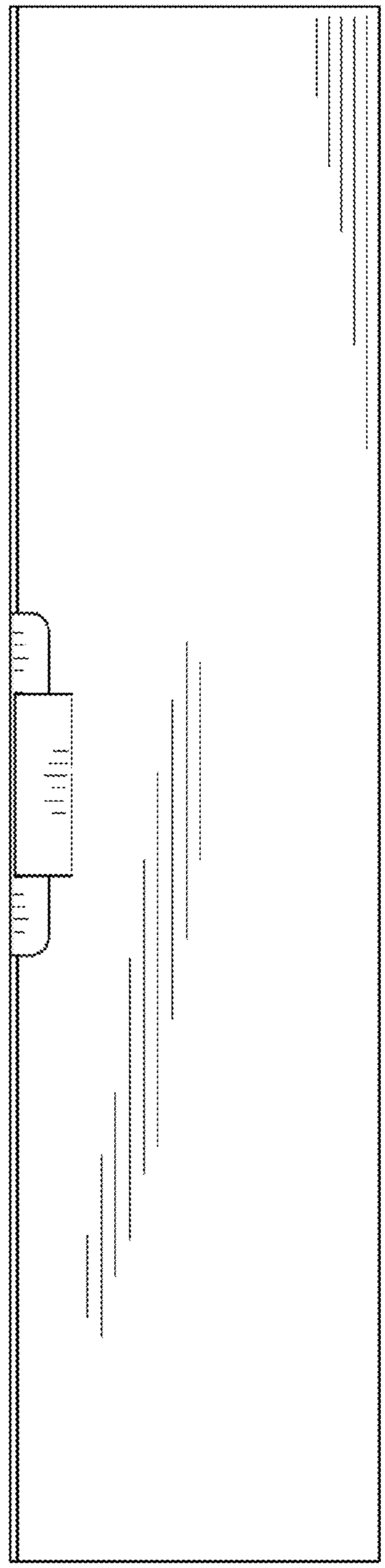

FIG. 2

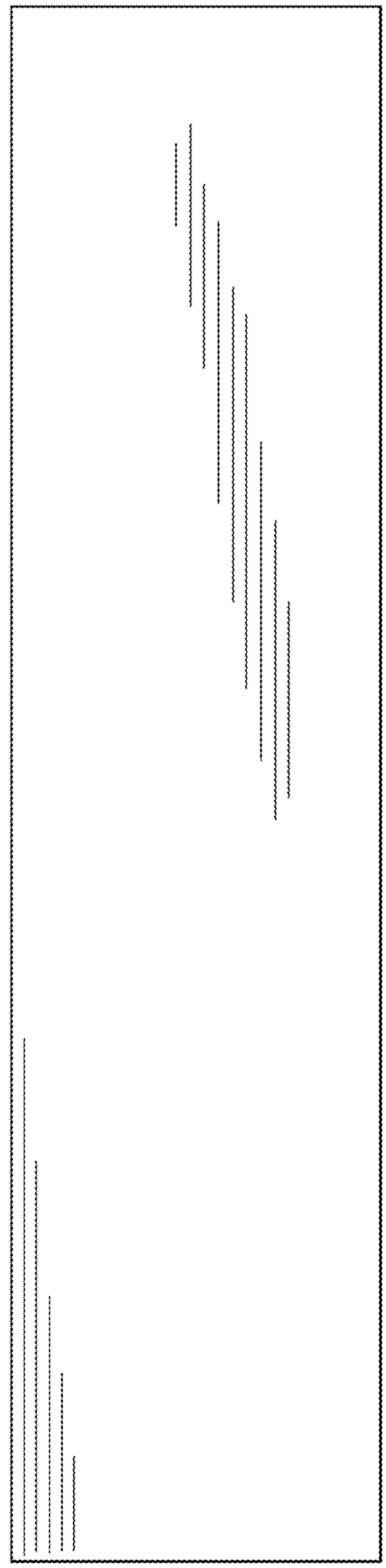

FIG. 3

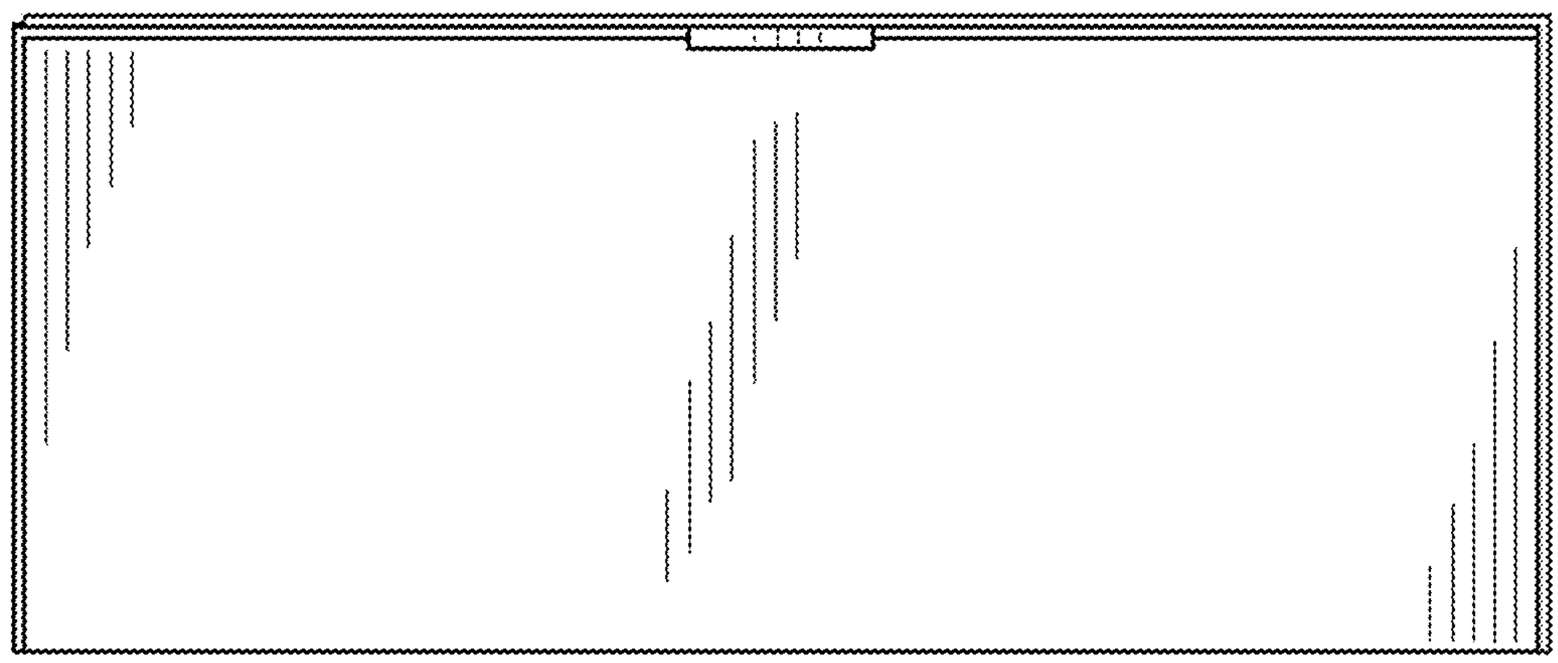

FIG. 4

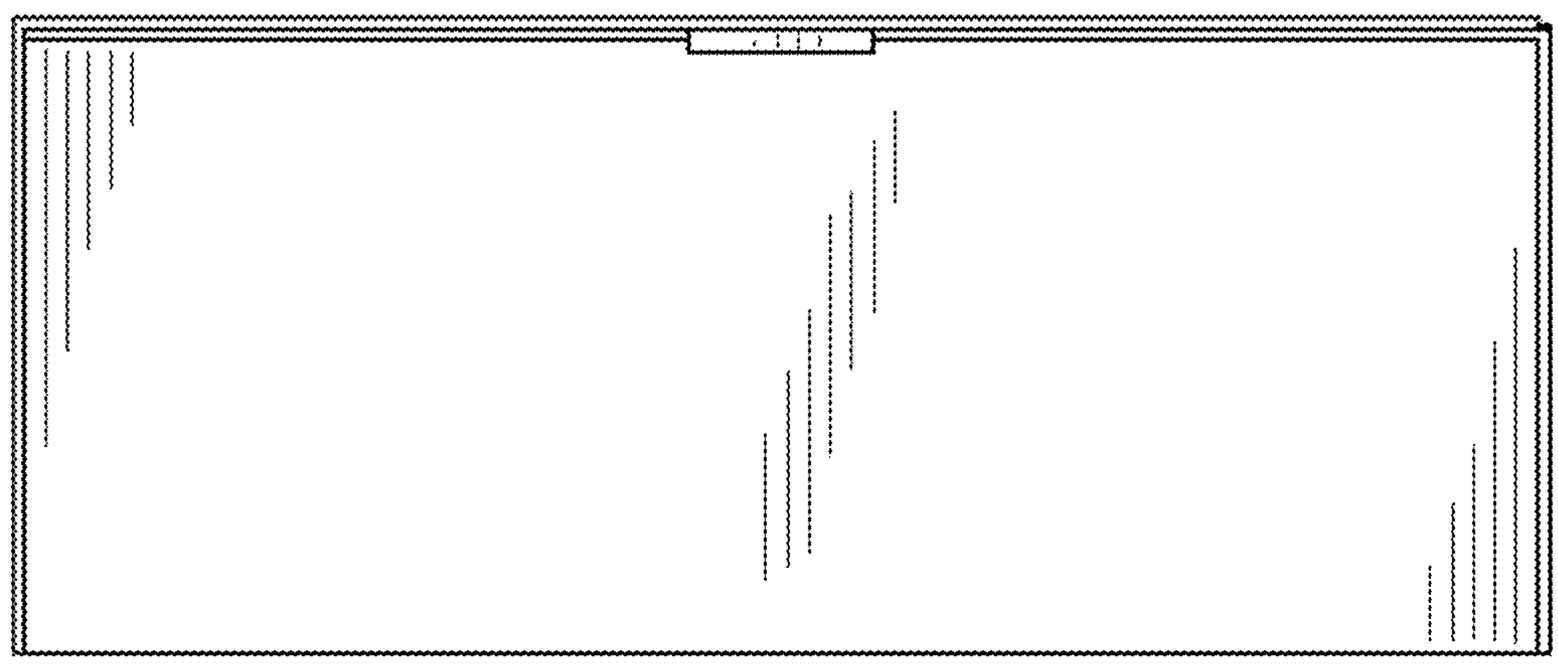

FIG. 5

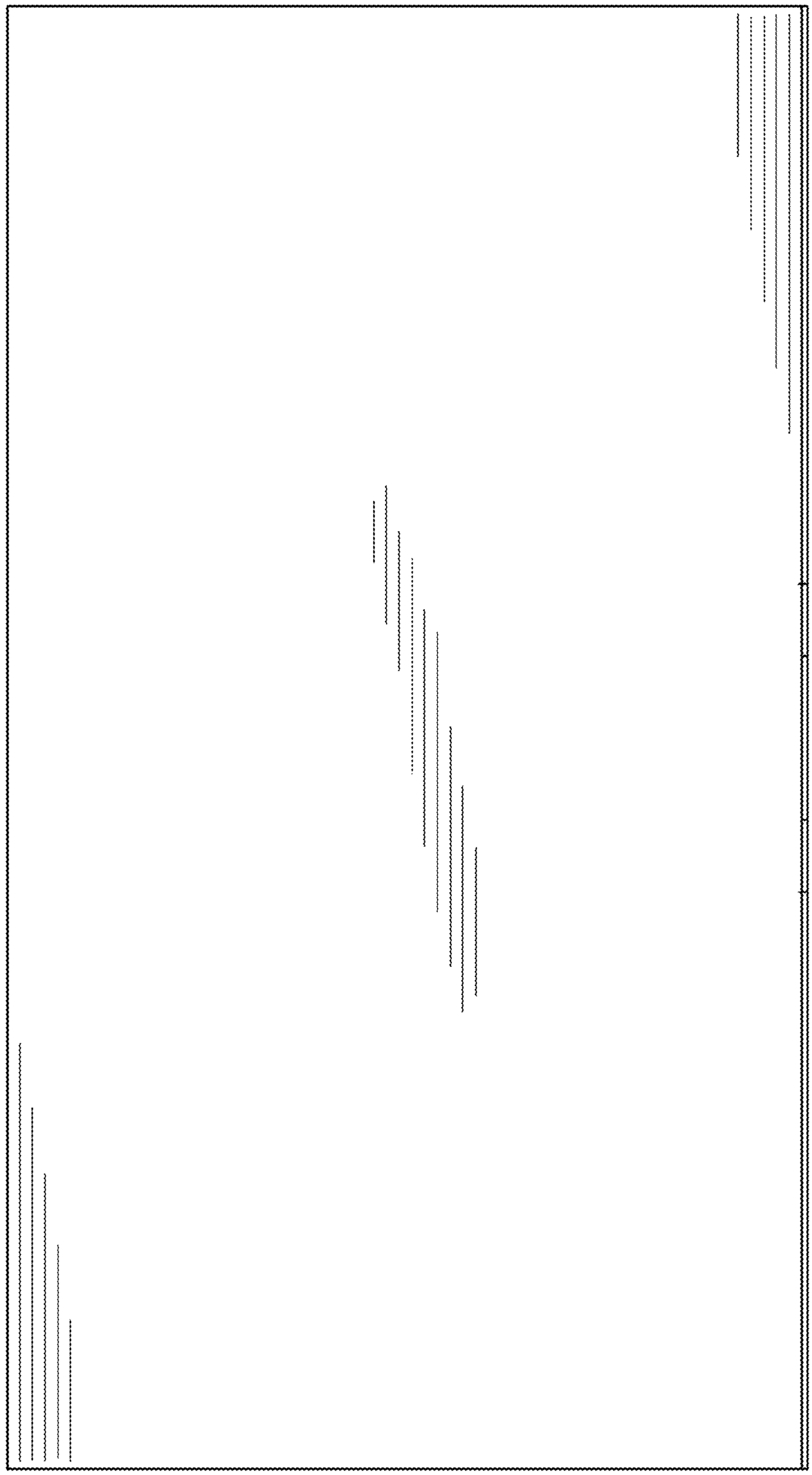

FIG. 6

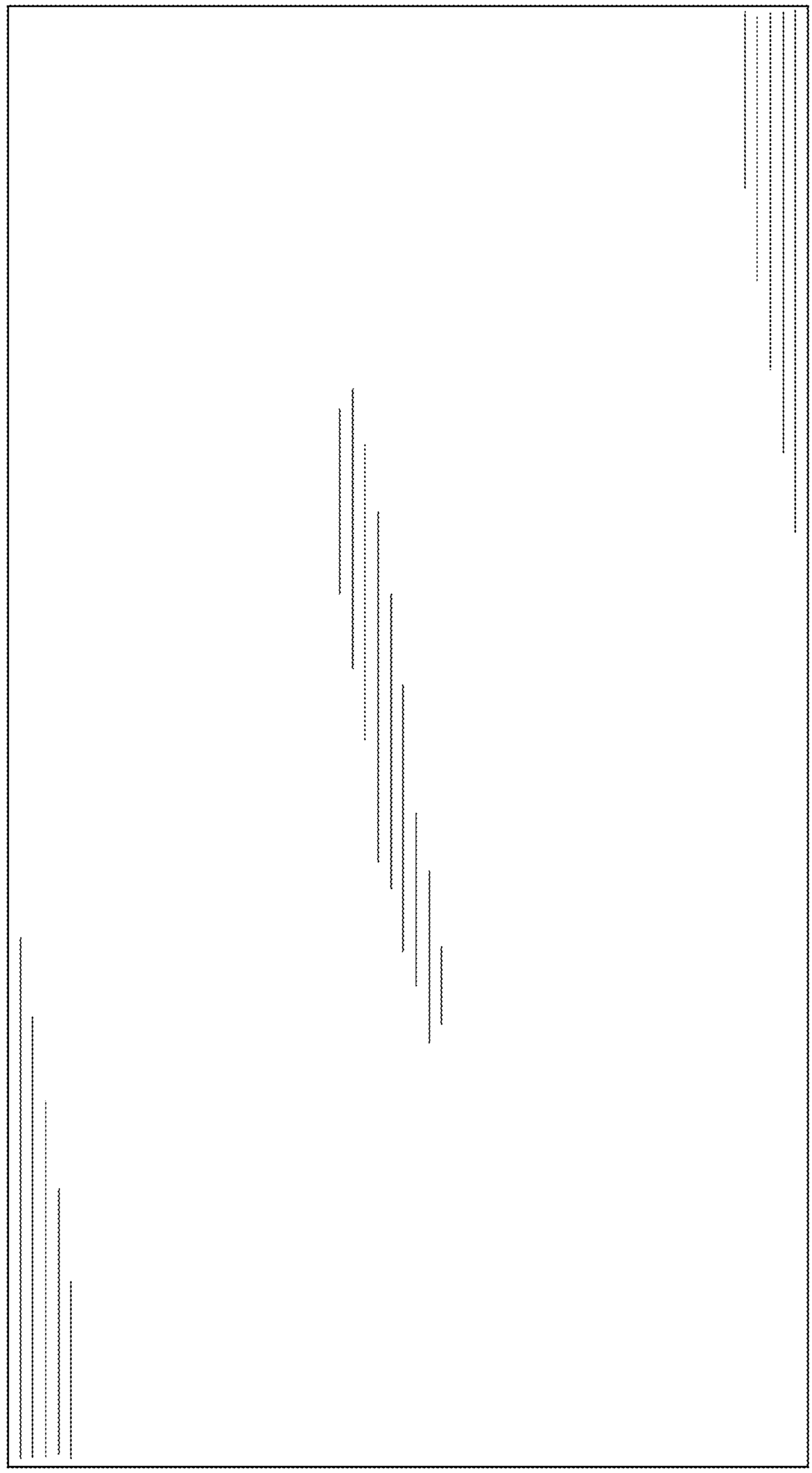

FIG. 7

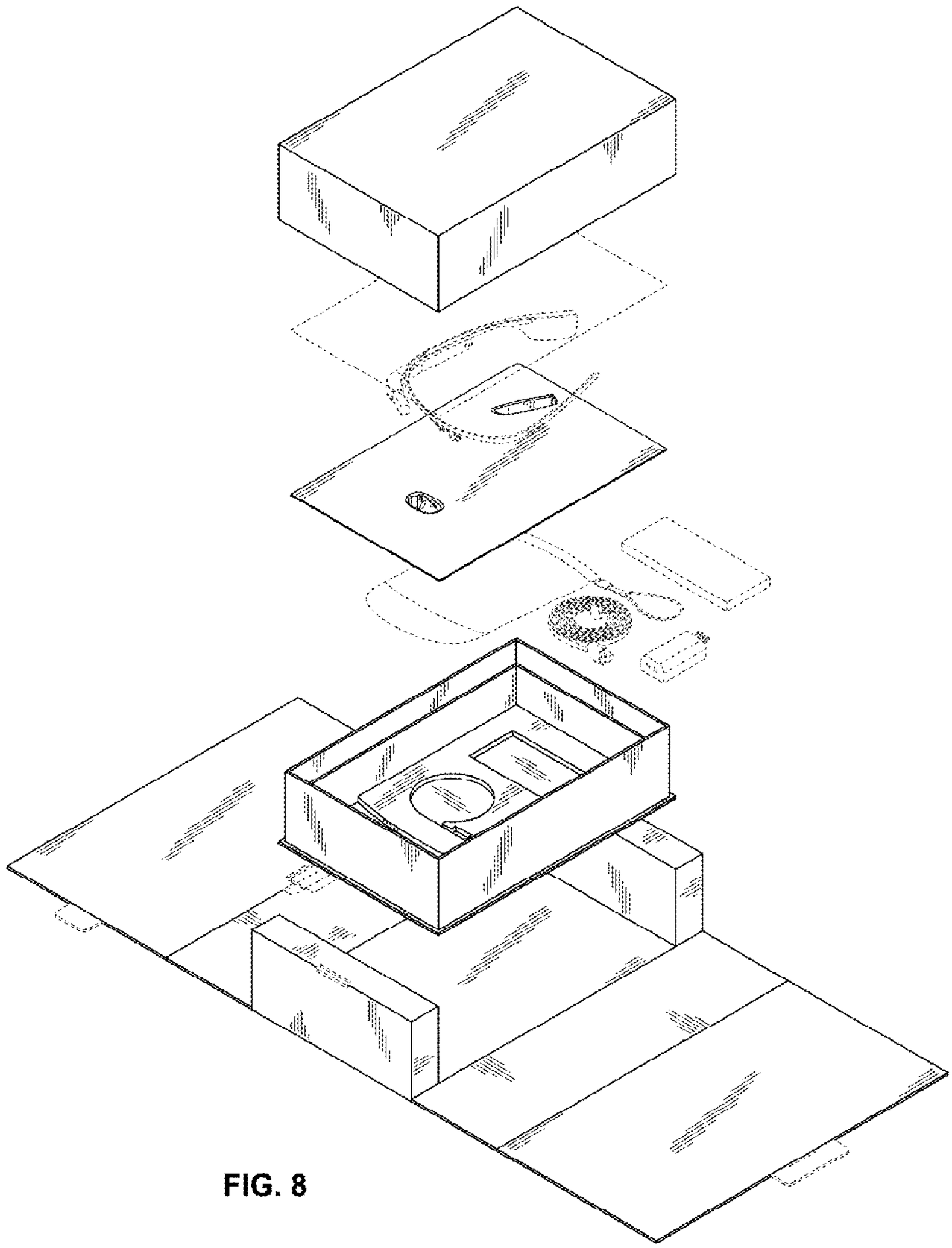

FIG. 8

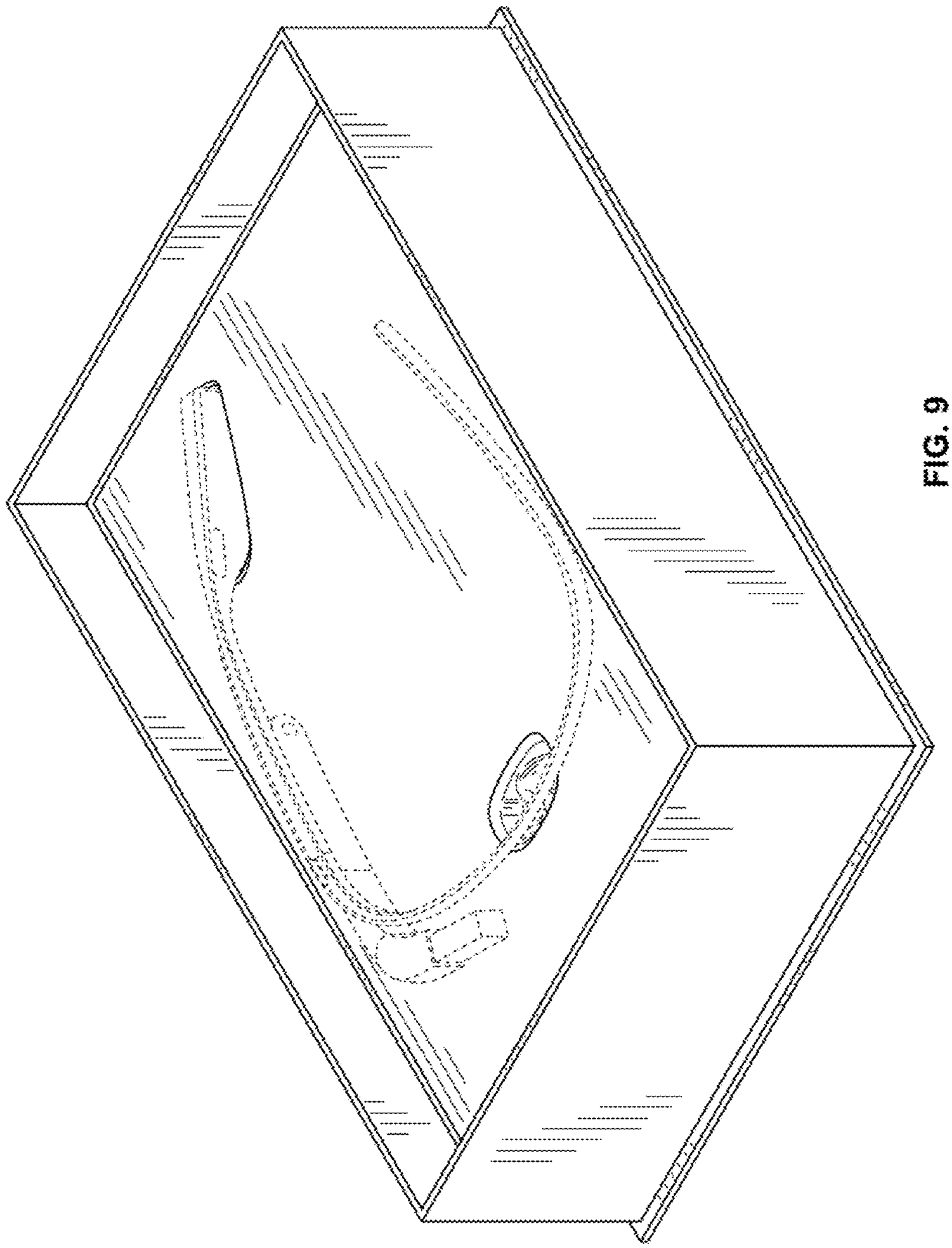

FIG. 9

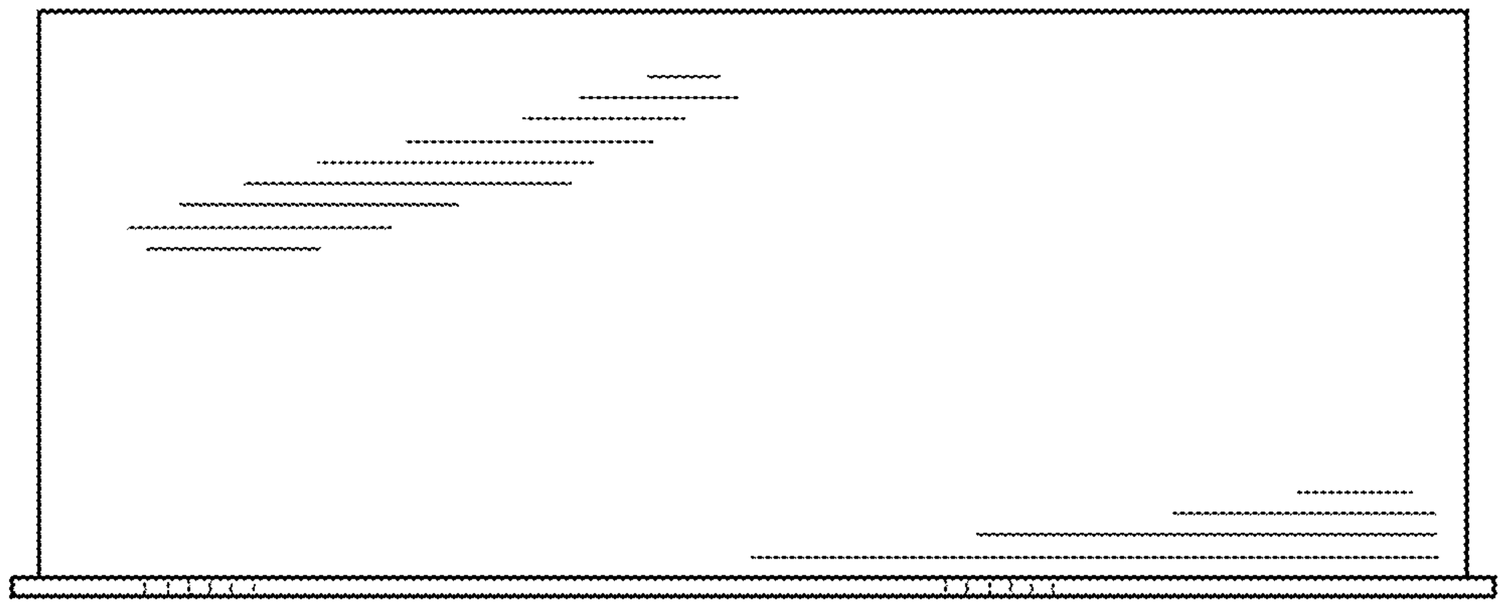

FIG. 10

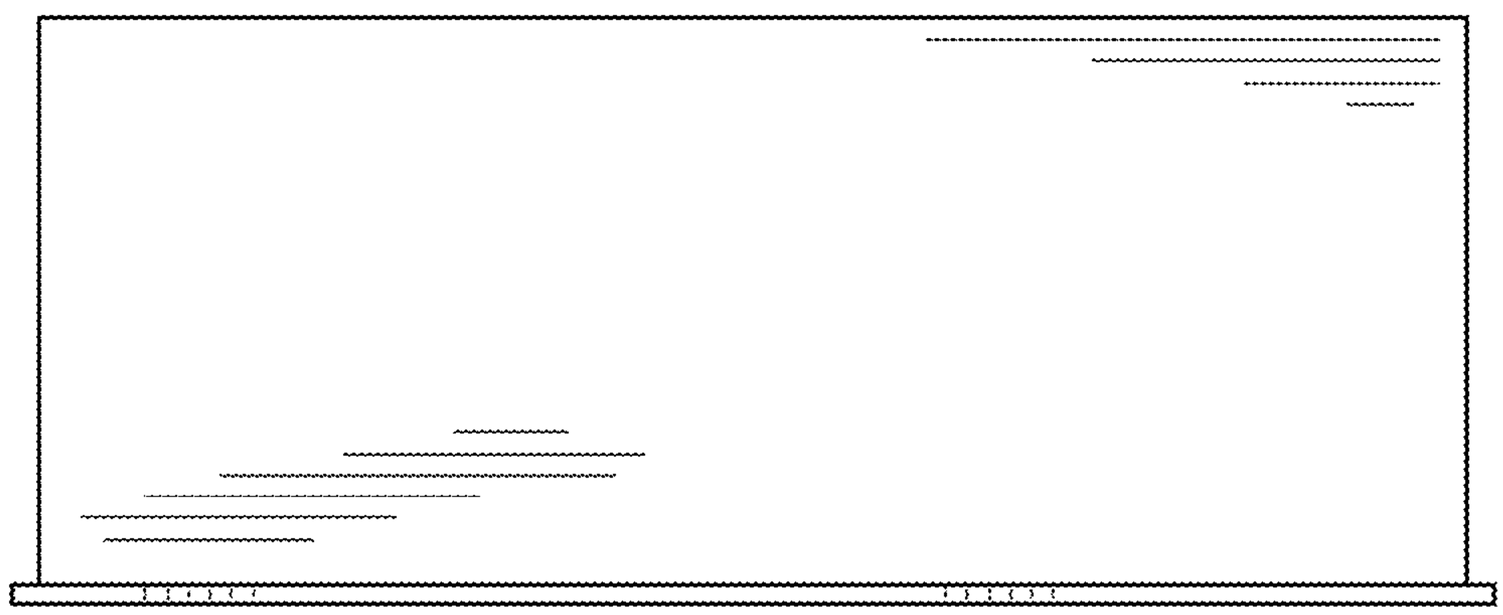

FIG. 11

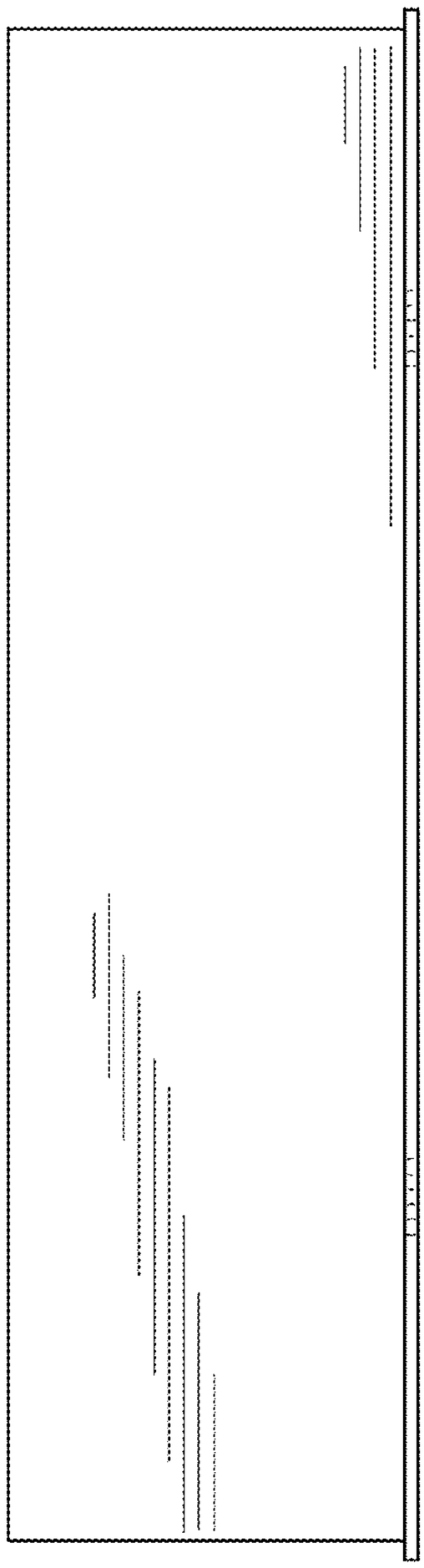

FIG. 12

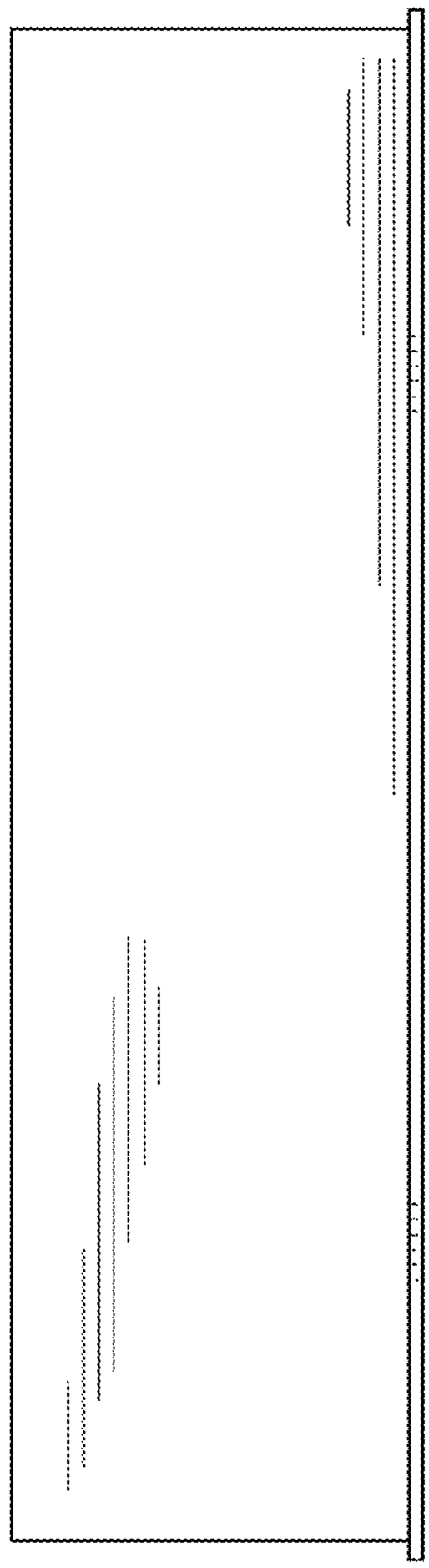

FIG. 13

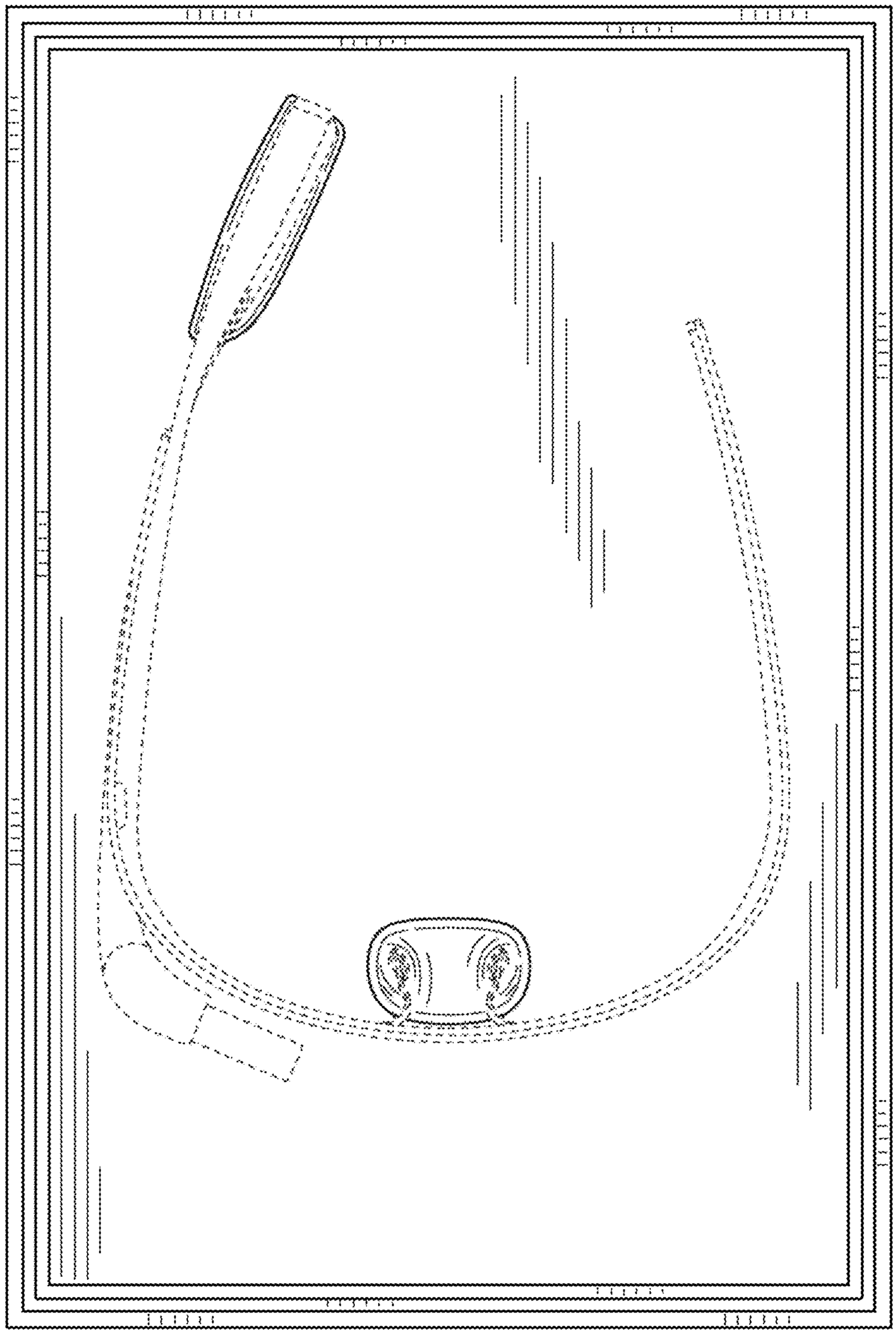

FIG. 14

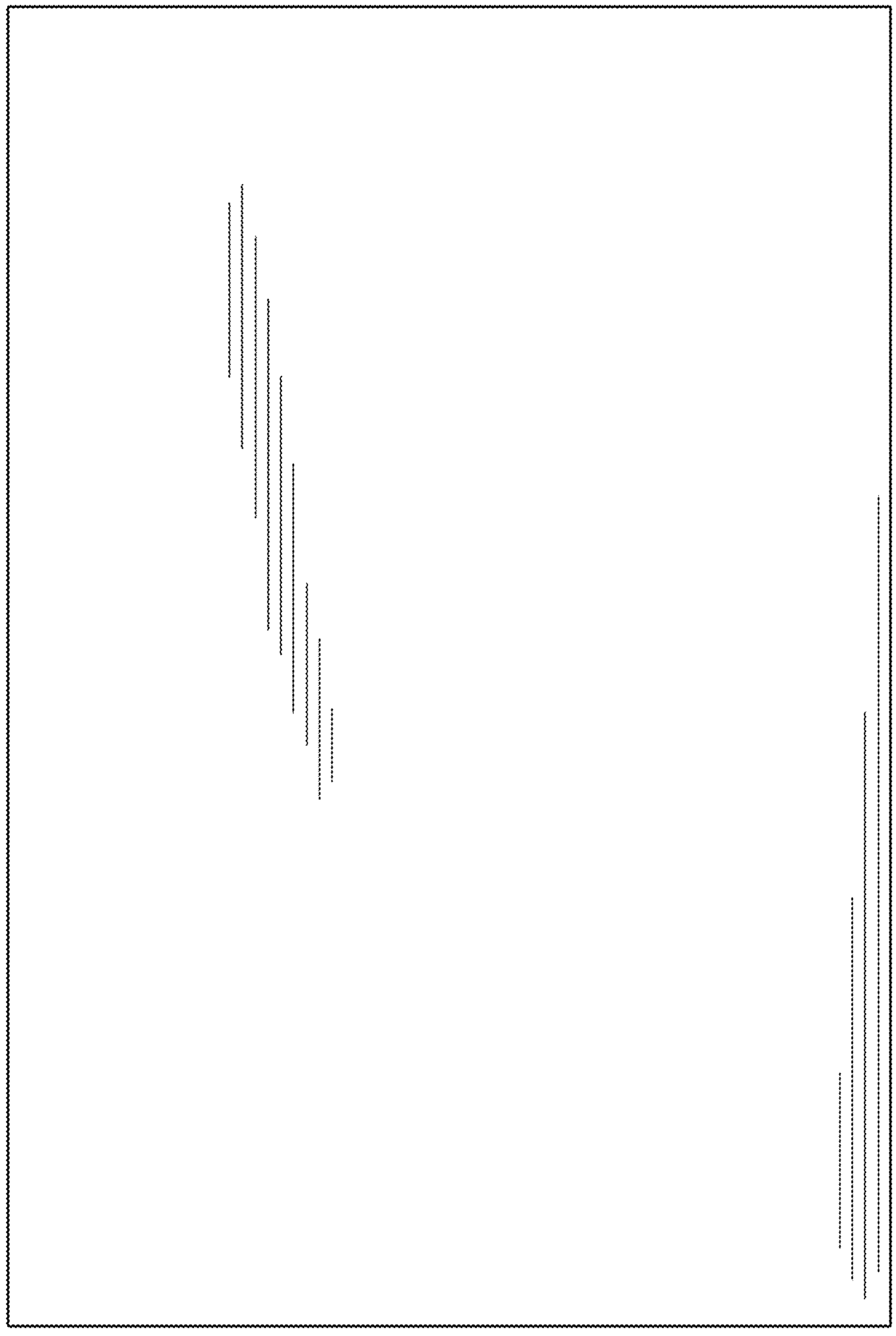

FIG. 15

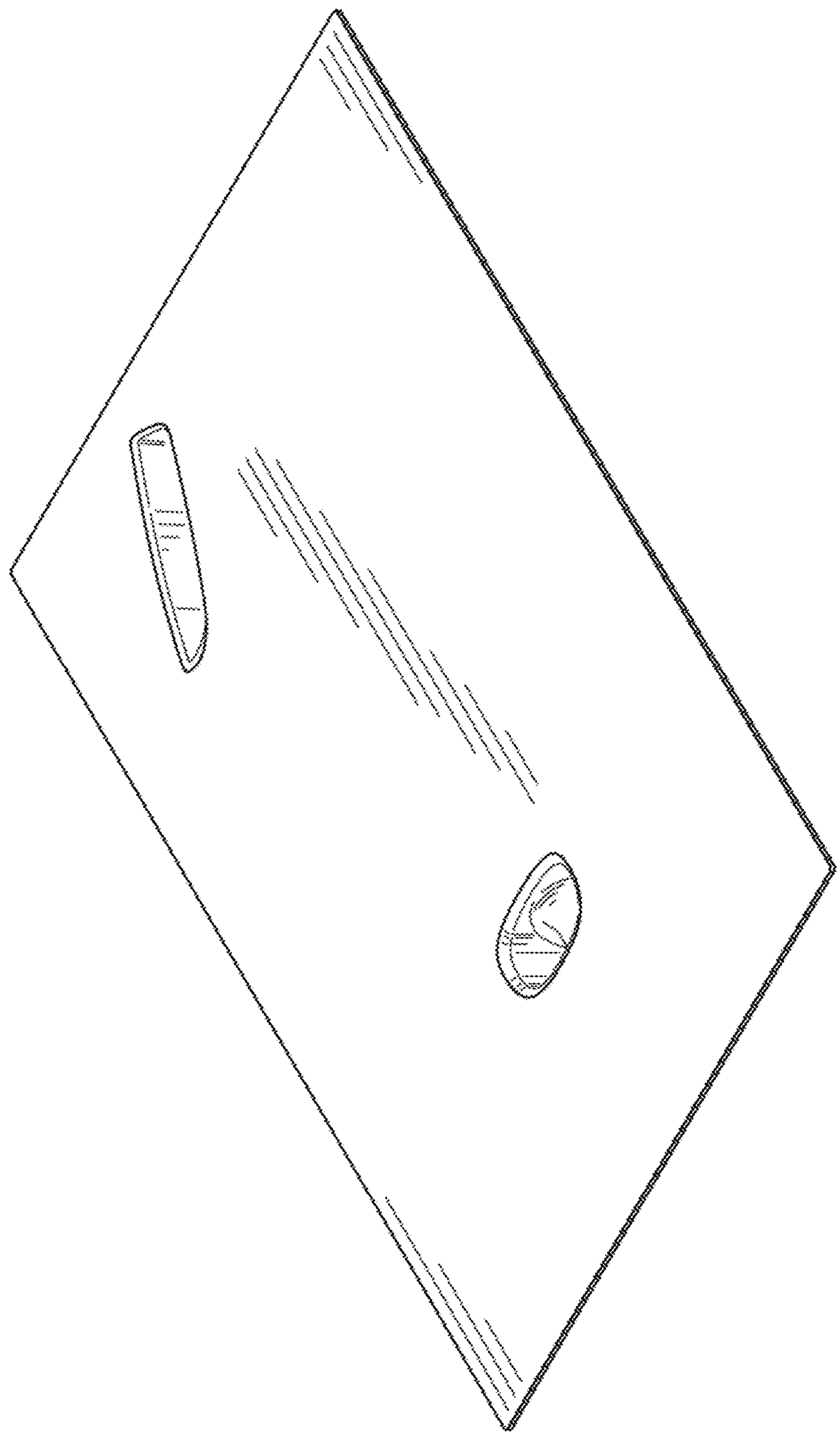

FIG. 16

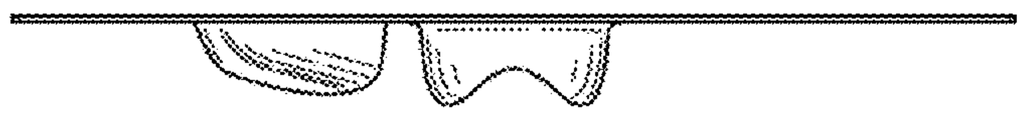

FIG. 17

FIG. 18

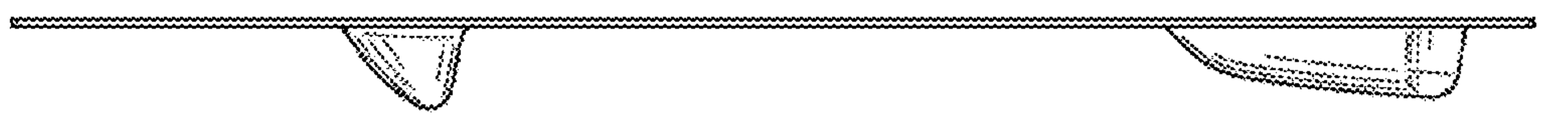

FIG. 19

FIG. 20

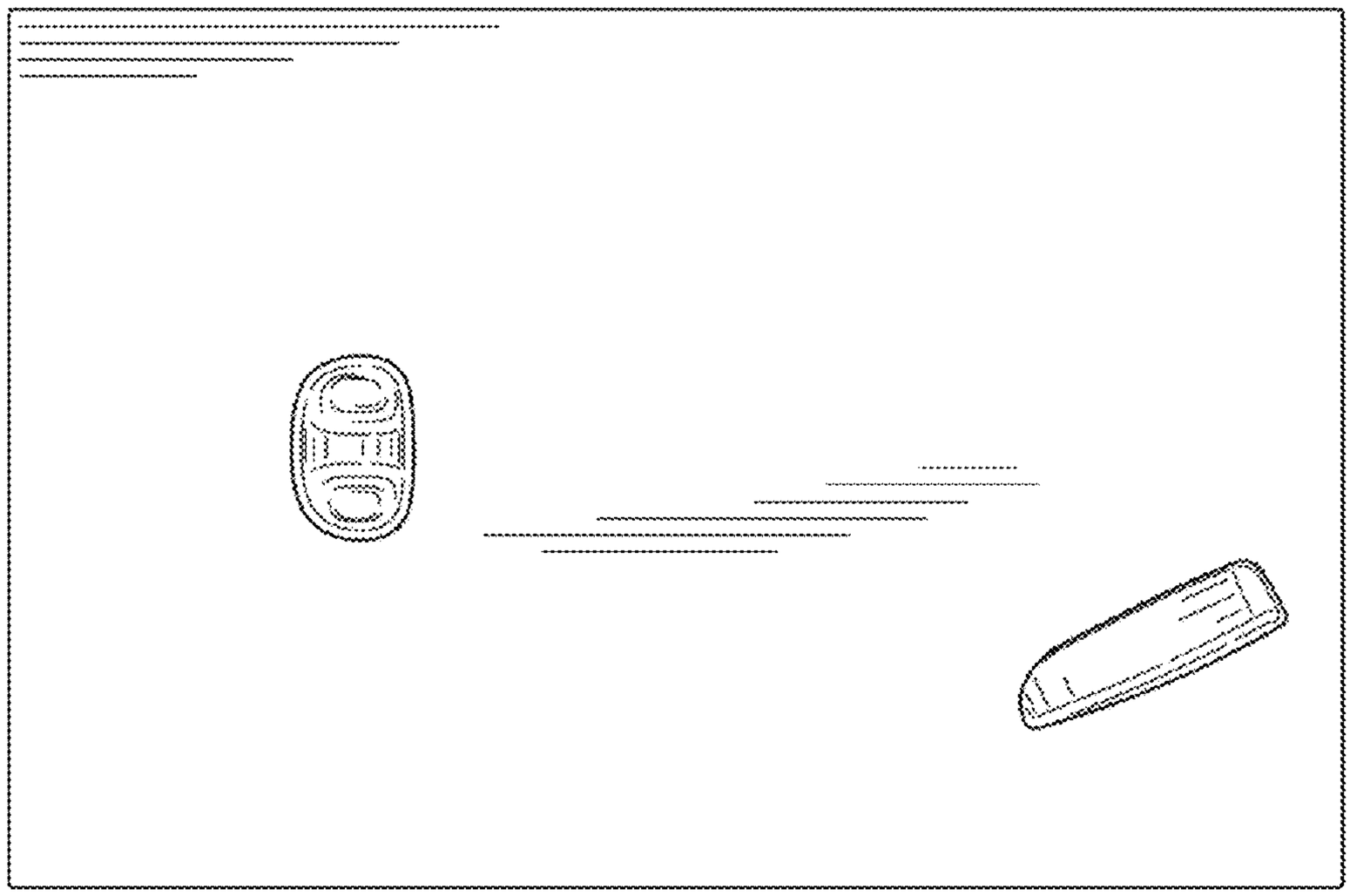

FIG. 22

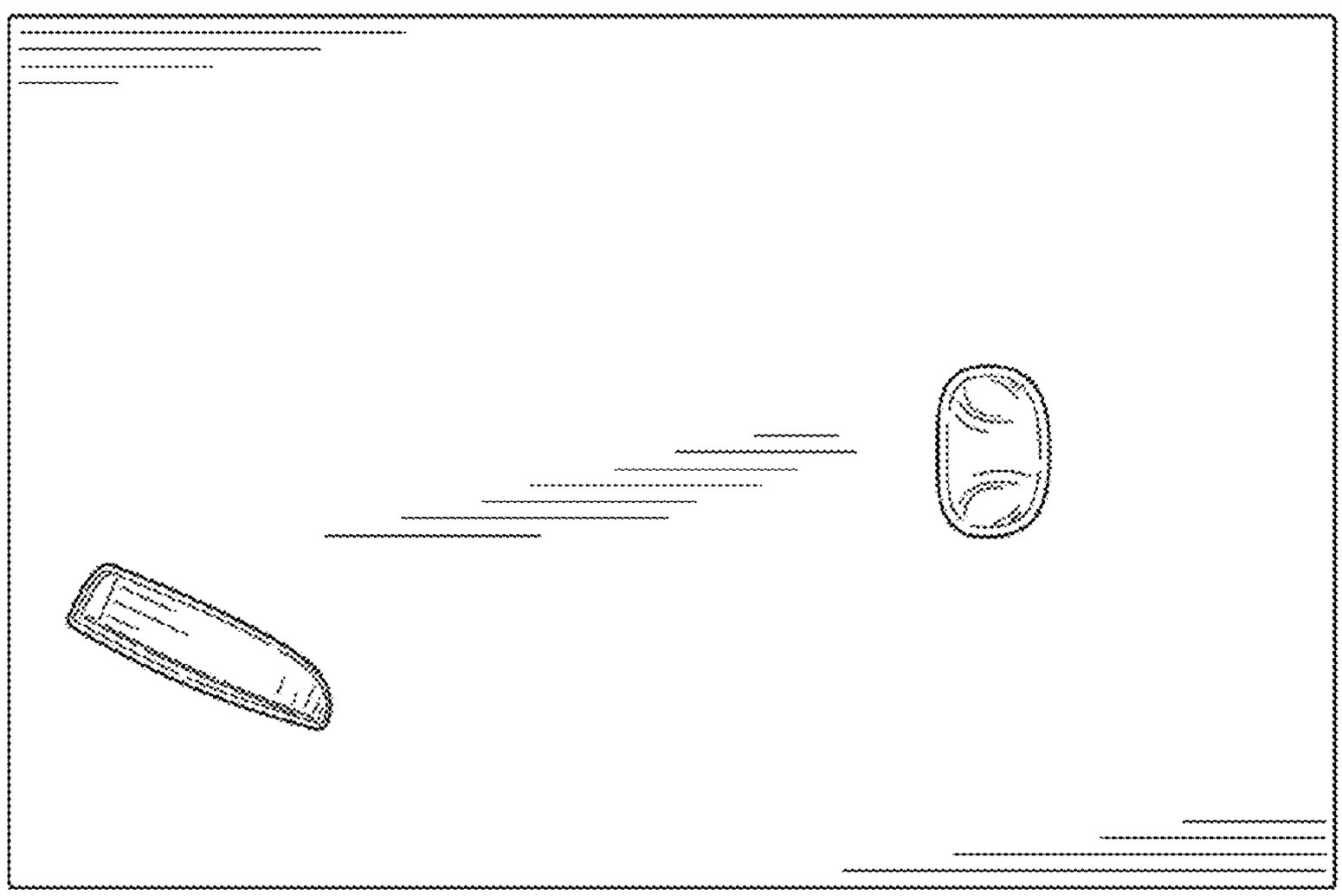

FIG. 21

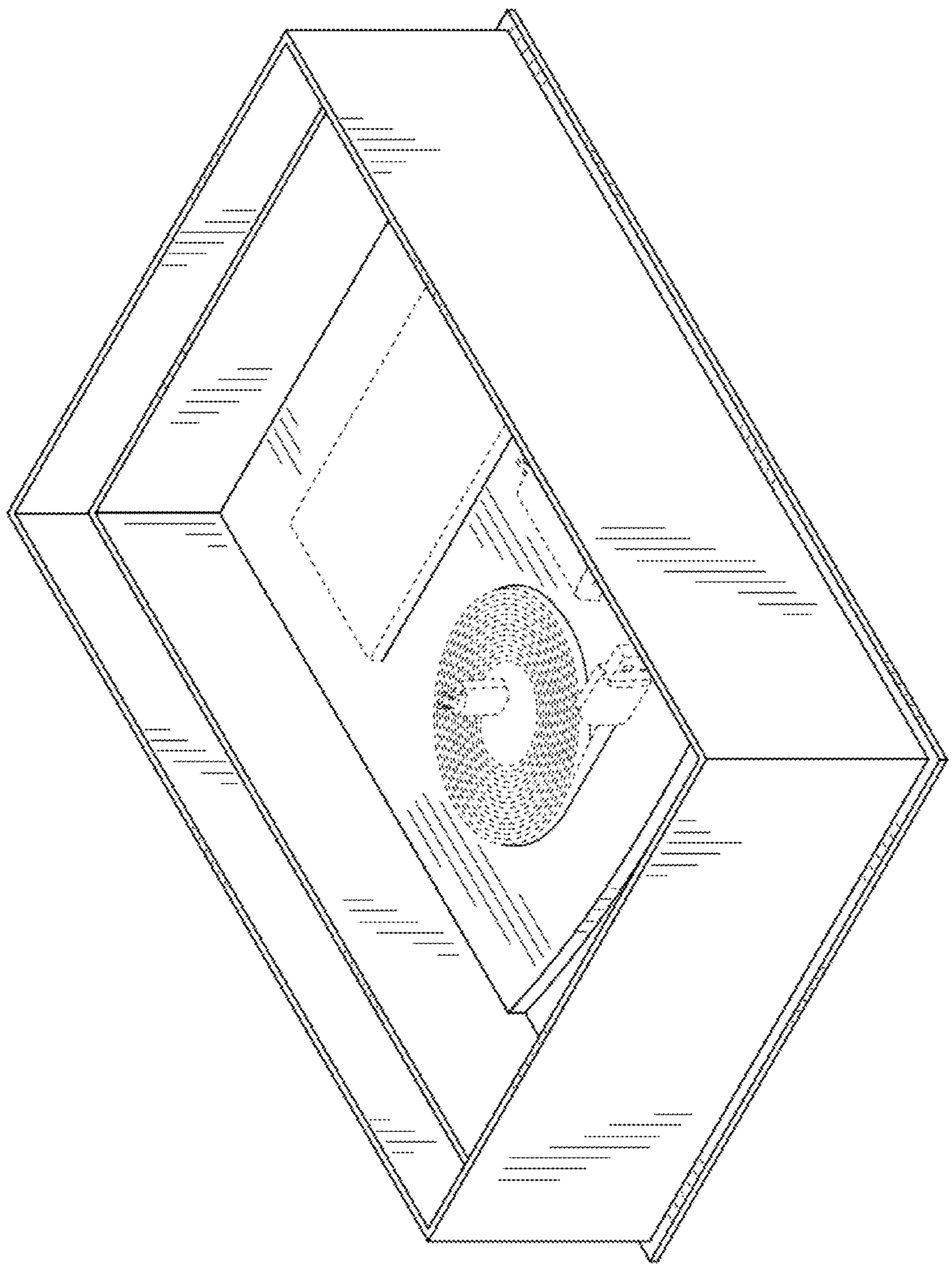

FIG. 23

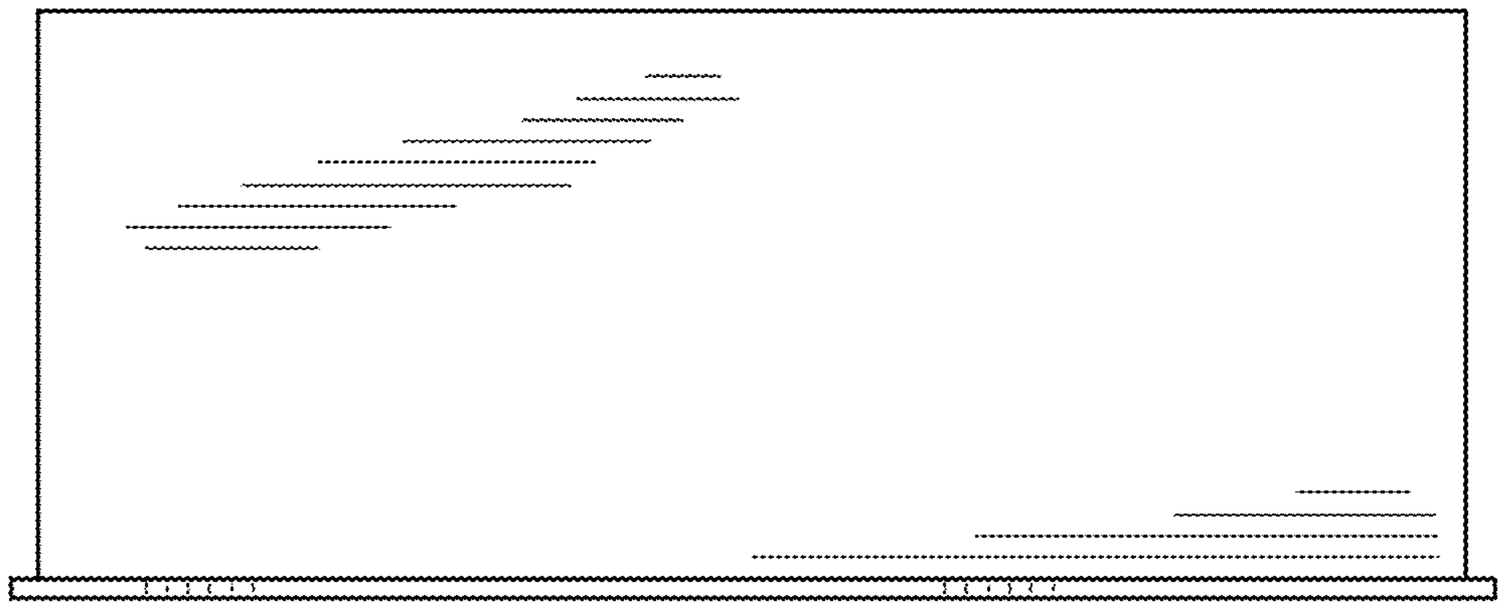

FIG. 24

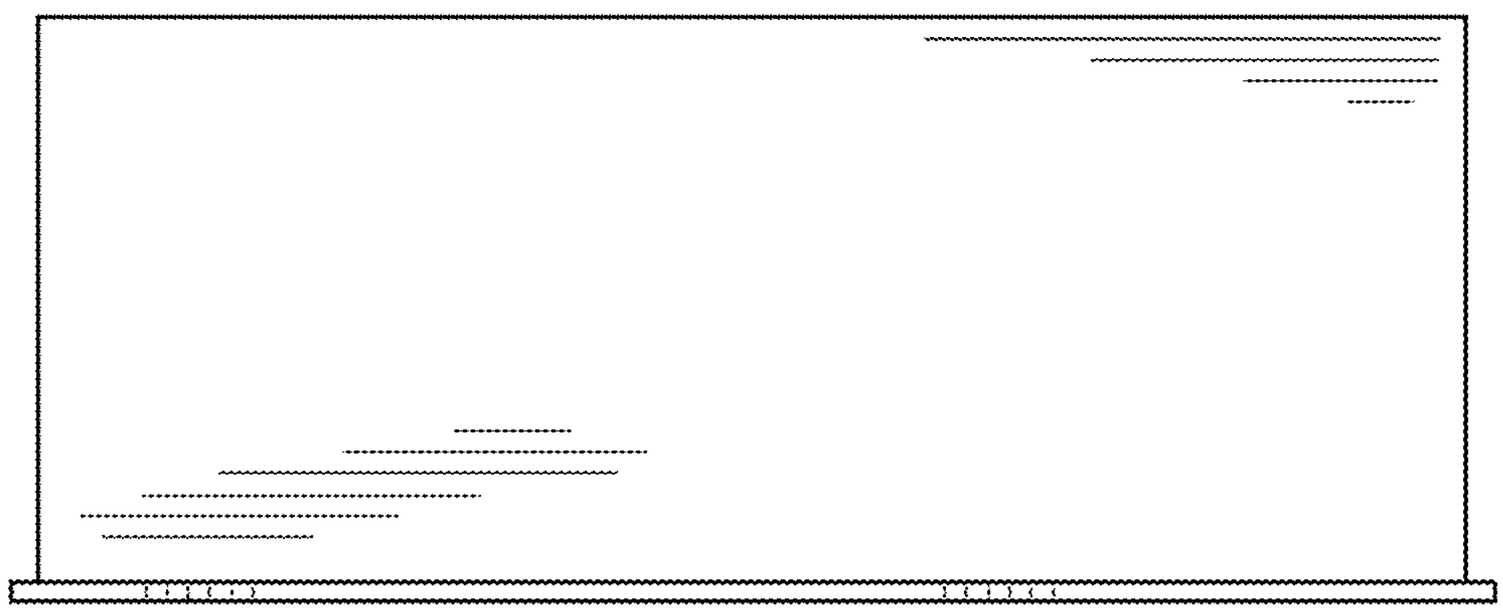

FIG. 25

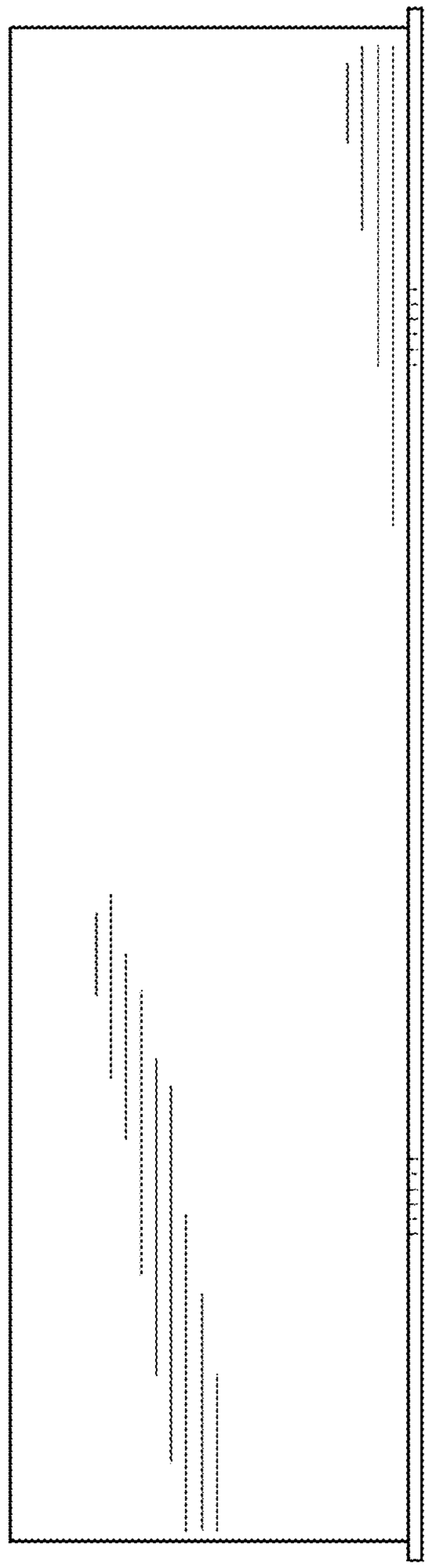

FIG. 26

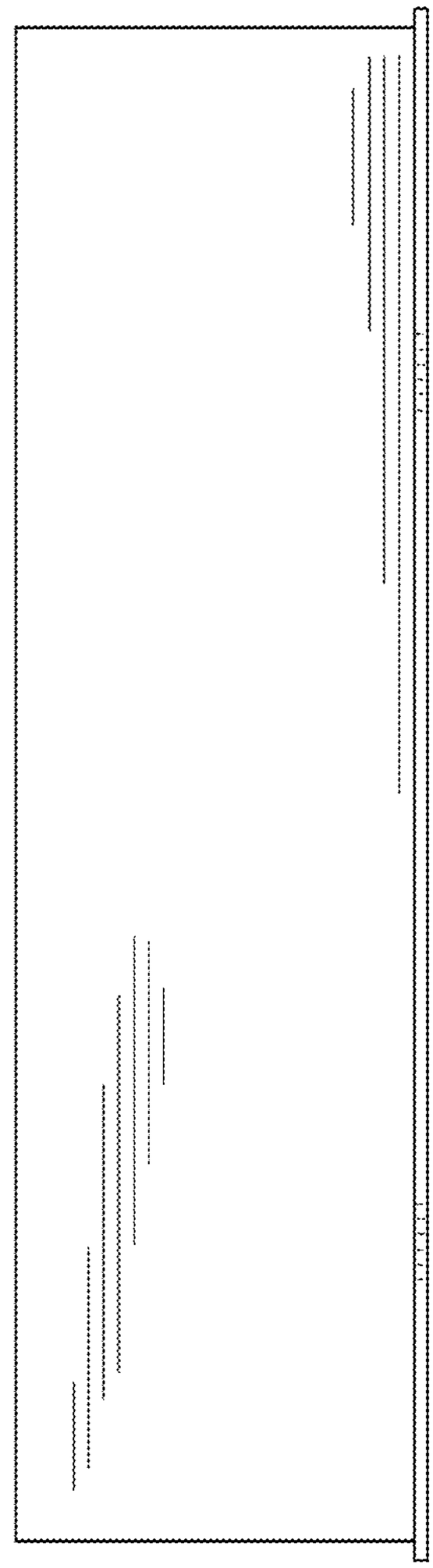

FIG. 27

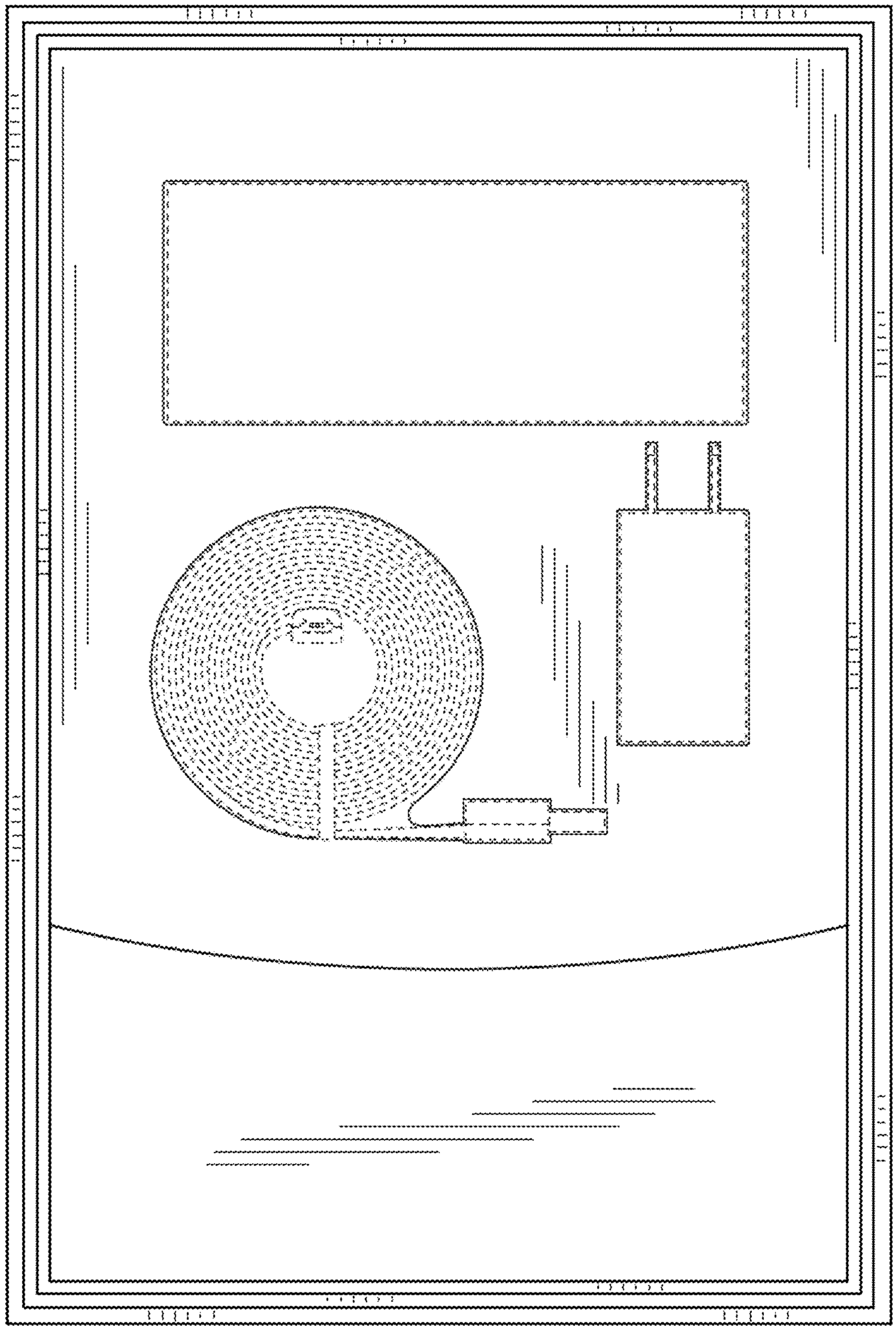

FIG. 28

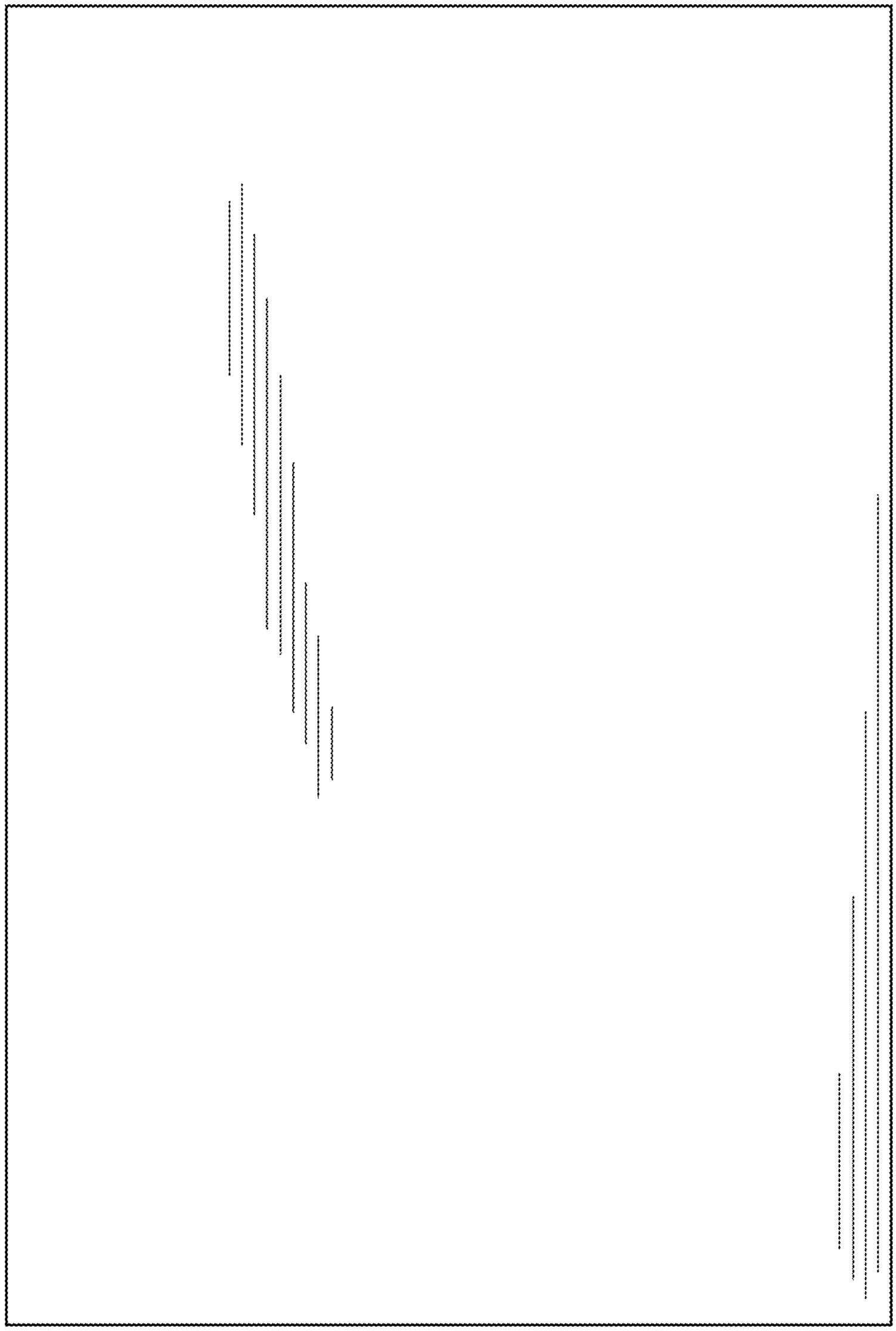

FIG. 29