US00D709325S

(12) United States Design Patent

Guo et al.

(10) Patent No.: US D709,325 S
(45) Date of Patent: ** Jul. 22, 2014

(54) **BLADE OF BLENDER**

(71) Applicant: **Guangdong Xinbao Electrical Applicances Holdings Co., Ltd**, Guangdong (CN)

(72) Inventors: **Jiangang Guo**, Guangdong (CN); **Dingguo Peng**, Guangdong (CN); **Dingxun Sheng**, Guangdong (CN)

(73) Assignee: **Guangdong Xinbao Electrical Appliances Holdings Co., Ltd**, Guangdong (CN)

(**) Term: **14 Years**

(21) Appl. No.: **29/461,146**

(22) Filed: **Jul. 18, 2013**

(30) **Foreign Application Priority Data**

Jan. 29, 2013 (CN) 2013 3 0027229

(51) **LOC (10) Cl.** **31-00**

(52) **U.S. Cl.**
USPC **D7/412**; D7/376; D7/378; D7/383; D7/384

(58) **Field of Classification Search**
USPC ..... D7/301–313, 316–326, 356–357, D7/372–386, 391–398, 412–415, 665, D7/691–693; D15/29, 147; D23/200; 30/265; 99/348, 508–512; 215/307; 220/563; 241/36, 101.2, 199.12, 241/282.1–282.2, 291, 292.1; 366/192–211, 241–254, 282.2, 270, 366/330.3, 434; 416/75–77, 70 R, 227 R; 473/591
See application file for complete search history.

(56) **References Cited**

U.S. PATENT DOCUMENTS

2,584,260 A * 2/1952 Custer 473/591
3,461,933 A * 8/1969 Mantelet 241/199.12

(Continued)

Primary Examiner — Ricky Pham
(74) *Attorney, Agent, or Firm* — Prakash Nama; Global IP Services, PLLC

(57) **CLAIM**

The ornamental design for a blade of blender, as shown and described.

DESCRIPTION

FIG. **1** is a front elevational view of a blade of blender showing the first embodiment of my new design;
FIG. **2** is a rear elevational view thereof;
FIG. **3** is a left side view thereof;
FIG. **4** is a right side view thereof;
FIG. **5** is a top plan view thereof;
FIG. **6** is a bottom plan view thereof;
FIG. **7** is a perspective view thereof;
FIG. **8** is a second perspective view thereof;
FIG. **9** is a third perspective view thereof;
FIG. **10** is a fourth perspective view thereof;
FIG. **11** is a top plan view of a blade of blender showing the second embodiment of my new design; the second embodiment is the same as the first embodiment except that the height of the two vertical blades in the first embodiment is different in the second embodiment, the two horizontal blades in the first embodiment are arranged paralleling with each other in the second embodiment, and the position of the slope between the two horizontal blades in the first embodiment is moved from one horizontal blade towards the other horizontal blade in the second embodiment;
FIG. **12** is a bottom plan view of the second embodiment;
FIG. **13** is a front elevational view of the second embodiment;
FIG. **14** is a rear elevational view of the second embodiment;
FIG. **15** is a left elevational view of the second embodiment;
FIG. **16** is a right elevational view of the second embodiment;
FIG. **17** is a perspective view of the second embodiment; FIG. **18** a second perspective view of the second embodiment;
FIG. **19** a third perspective view of the second embodiment; and,
FIG. **20** is a fourth perspective view of the second embodiment.

1 Claim, 13 Drawing Sheets

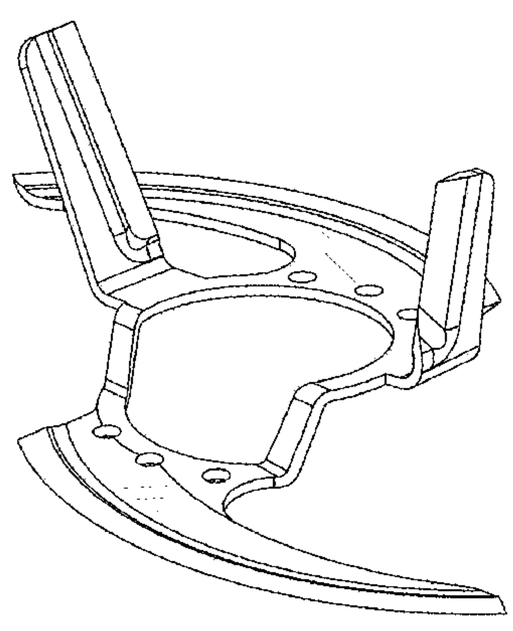

(56) **References Cited**

U.S. PATENT DOCUMENTS

4,173,310	A *	11/1979	Schaeffer	241/282.1
4,260,267	A *	4/1981	Walton	366/343
4,331,300	A *	5/1982	Hicks et al.	241/282.1
4,733,827	A *	3/1988	Williams	241/101.2
4,817,878	A *	4/1989	Shibata	241/282.2
D421,201	S *	2/2000	Crescenzi et al.	D7/412
D421,546	S *	3/2000	Ekstrom	D7/412
D432,621	S *	10/2000	Etschel et al.	D23/200
6,532,863	B1 *	3/2003	Lee	99/348
D499,303	S *	12/2004	Huang	D7/412
D501,628	S *	2/2005	Feil	D7/412
6,866,414	B2 *	3/2005	Kupidlowski	366/330.3
D519,526	S *	4/2006	Bowsher	D15/29
D523,028	S *	6/2006	Fitzpatrick	D15/29
D572,076	S *	7/2008	Ling	D7/384
7,419,111	B2 *	9/2008	Gursel	241/282.1
D604,101	S *	11/2009	Sands	D7/412
7,641,380	B2 *	1/2010	Behar et al.	366/205
D622,095	S *	8/2010	Metaxatos et al.	D7/383
D624,359	S *	9/2010	Schleinzer	D7/412
D647,364	S *	10/2011	Audette et al.	D7/412
D647,365	S *	10/2011	Audette et al.	D7/412
8,132,752	B1 *	3/2012	Hotaling et al.	241/282.1
D663,586	S *	7/2012	Audette	D7/412
D668,115	S *	10/2012	Potter	D7/412
D682,030	S *	5/2013	Ezechukwu	D7/412
D684,817	S *	6/2013	Leavitt	D7/412
D690,751	S *	10/2013	Kehoe et al.	D15/147
D696,070	S *	12/2013	Audette	D7/412
D700,013	S *	2/2014	Chu	D7/412
2002/0139884	A1 *	10/2002	Williams et al.	241/282.1
2006/0176771	A1 *	8/2006	Adams	366/270
2008/0198691	A1 *	8/2008	Behar et al.	366/205
2009/0114616	A1 *	5/2009	White et al.	215/307
2009/0134173	A1 *	5/2009	Liang et al.	220/563
2009/0260236	A1 *	10/2009	Lin	30/265
2012/0091245	A1 *	4/2012	Menashes	241/282.1

* cited by examiner

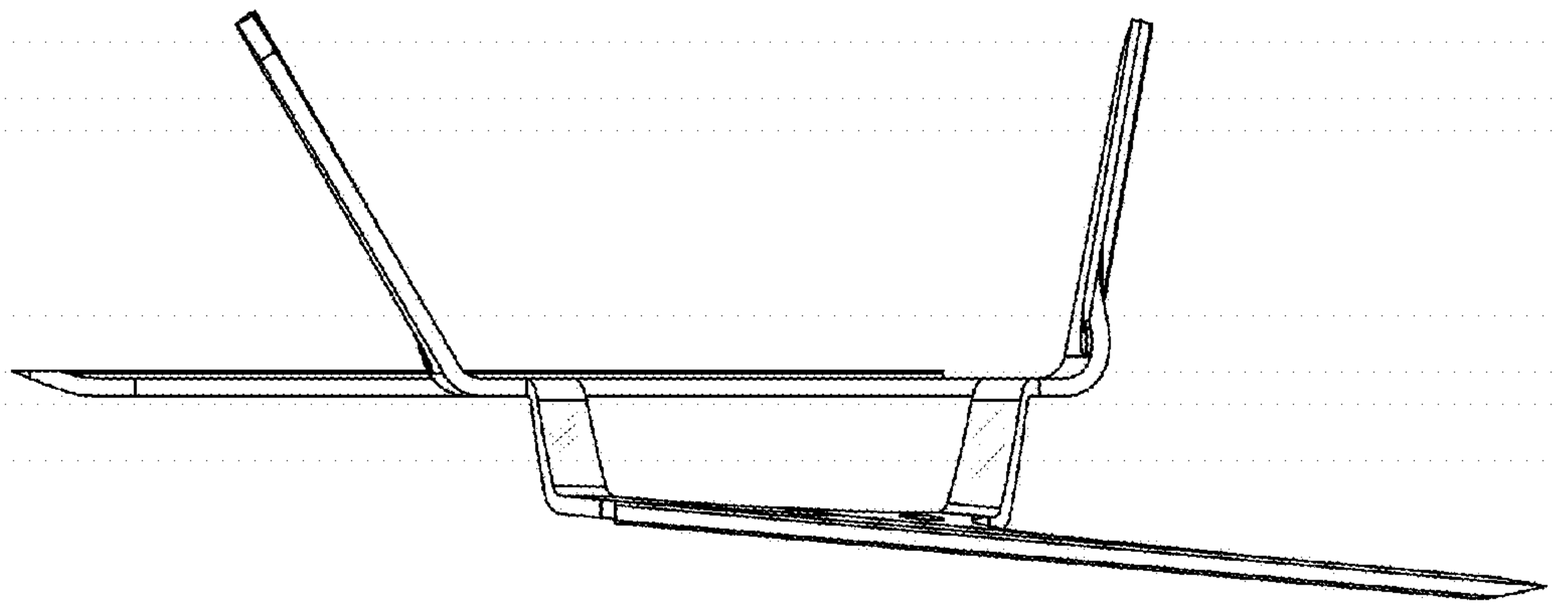

FIG. 1

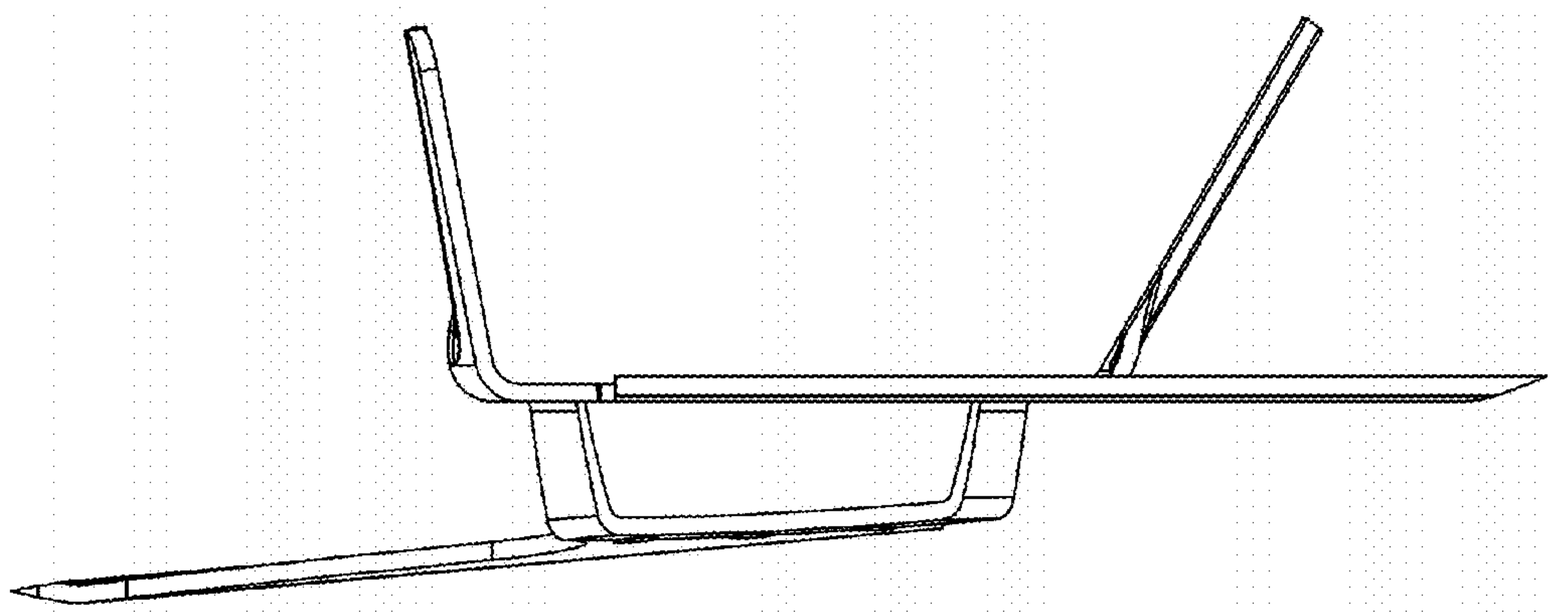

FIG. 2

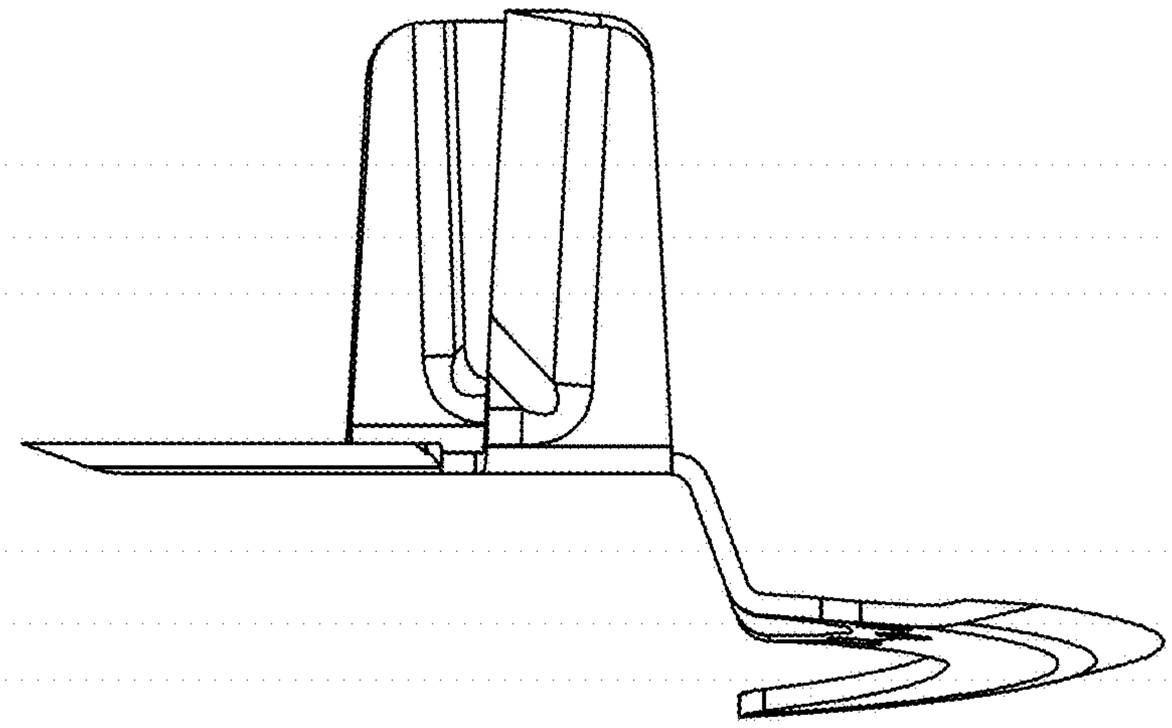

FIG. 3

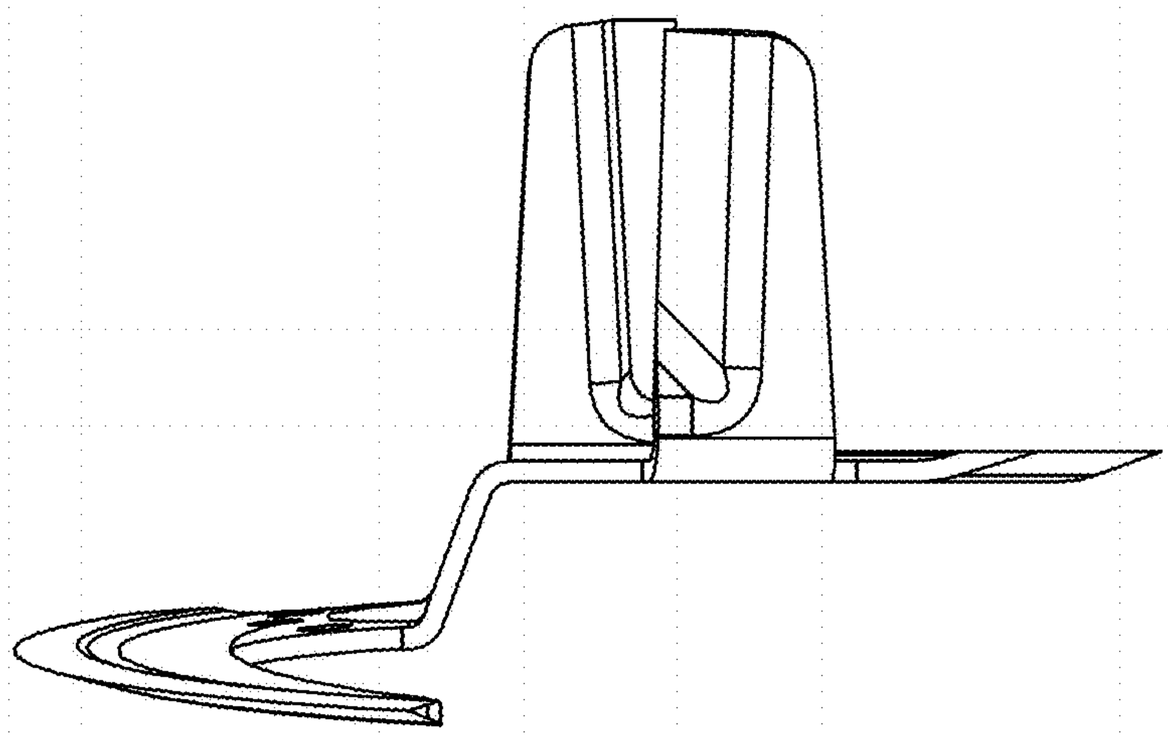

FIG. 4

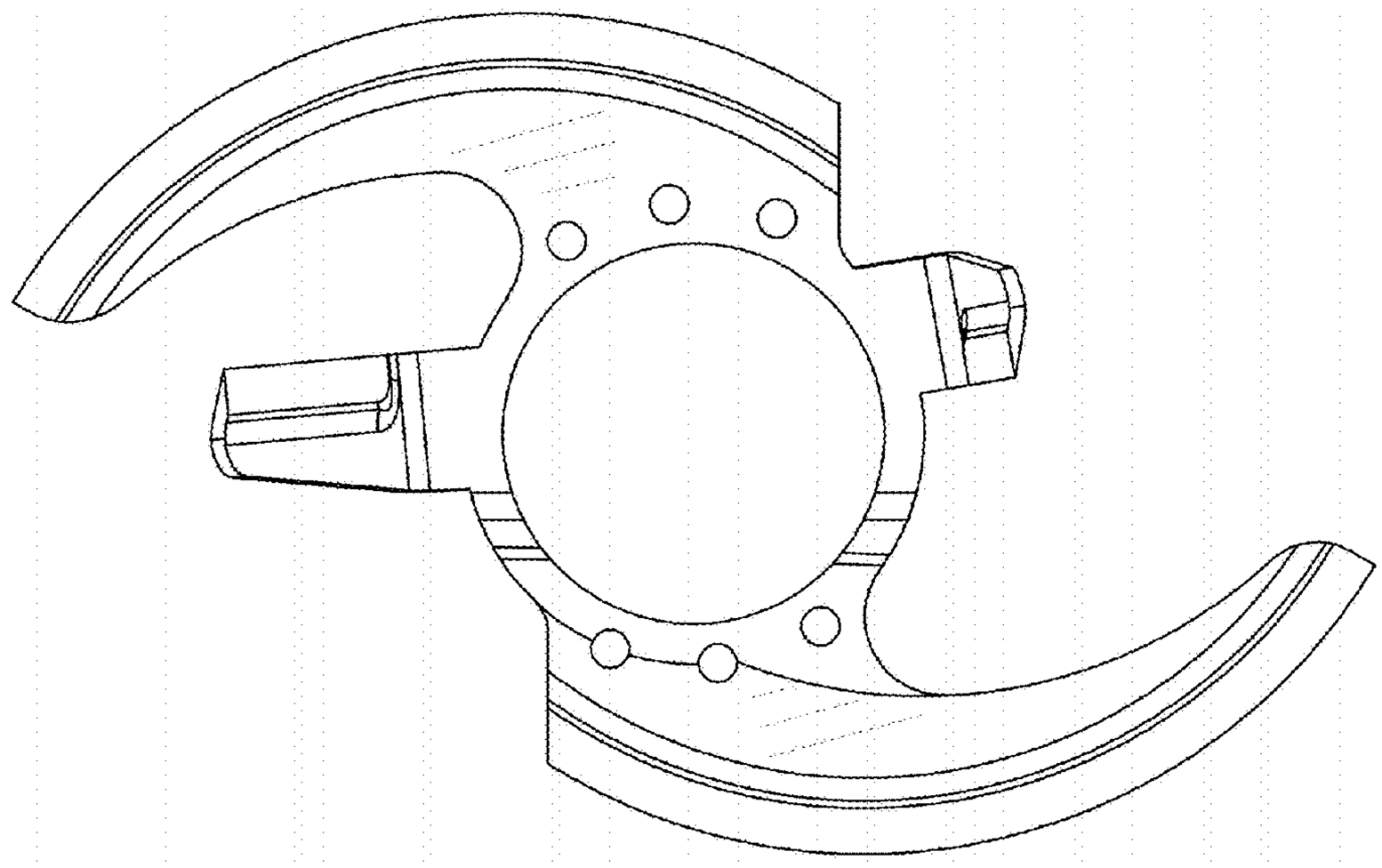

FIG. 5

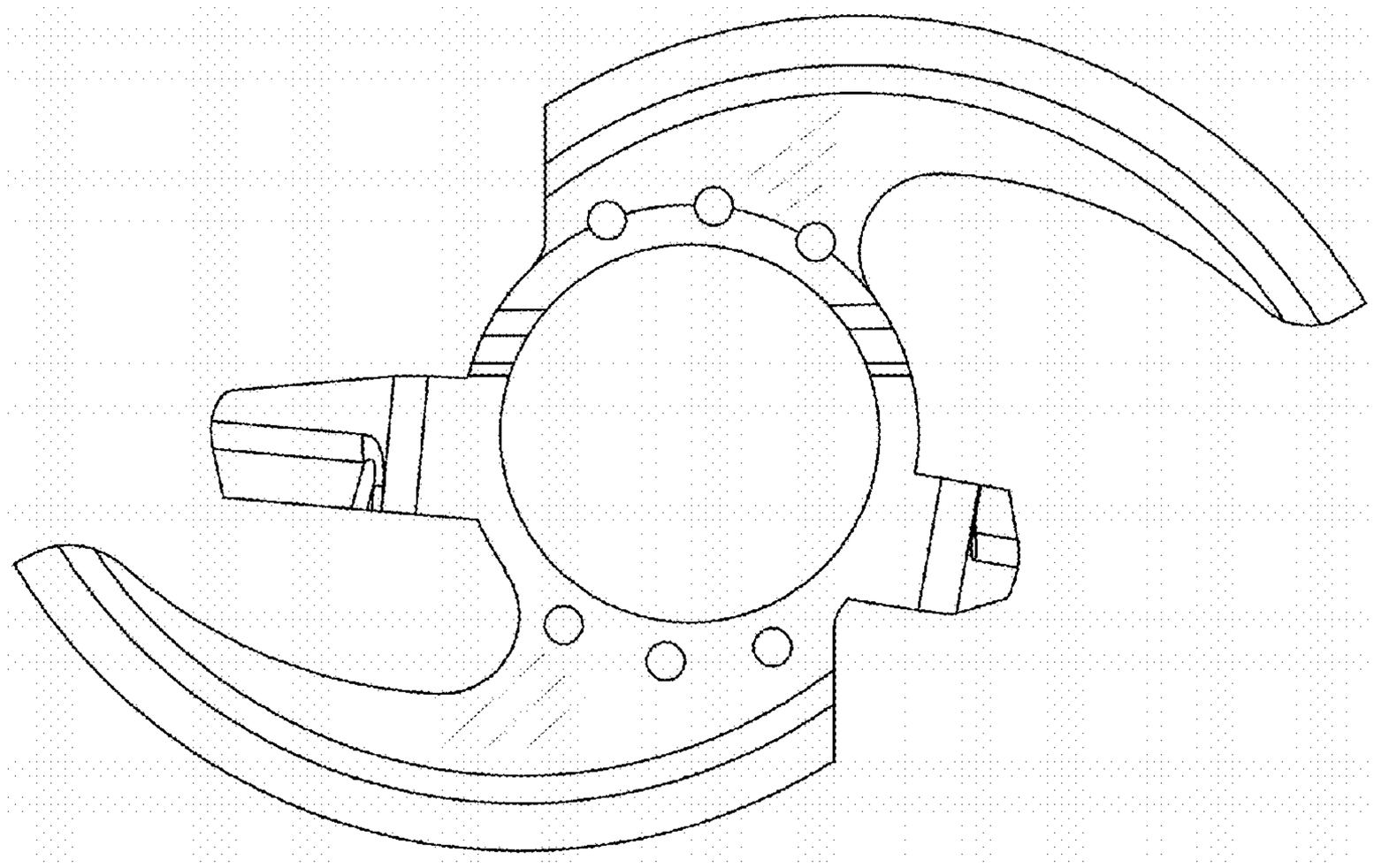

FIG. 6

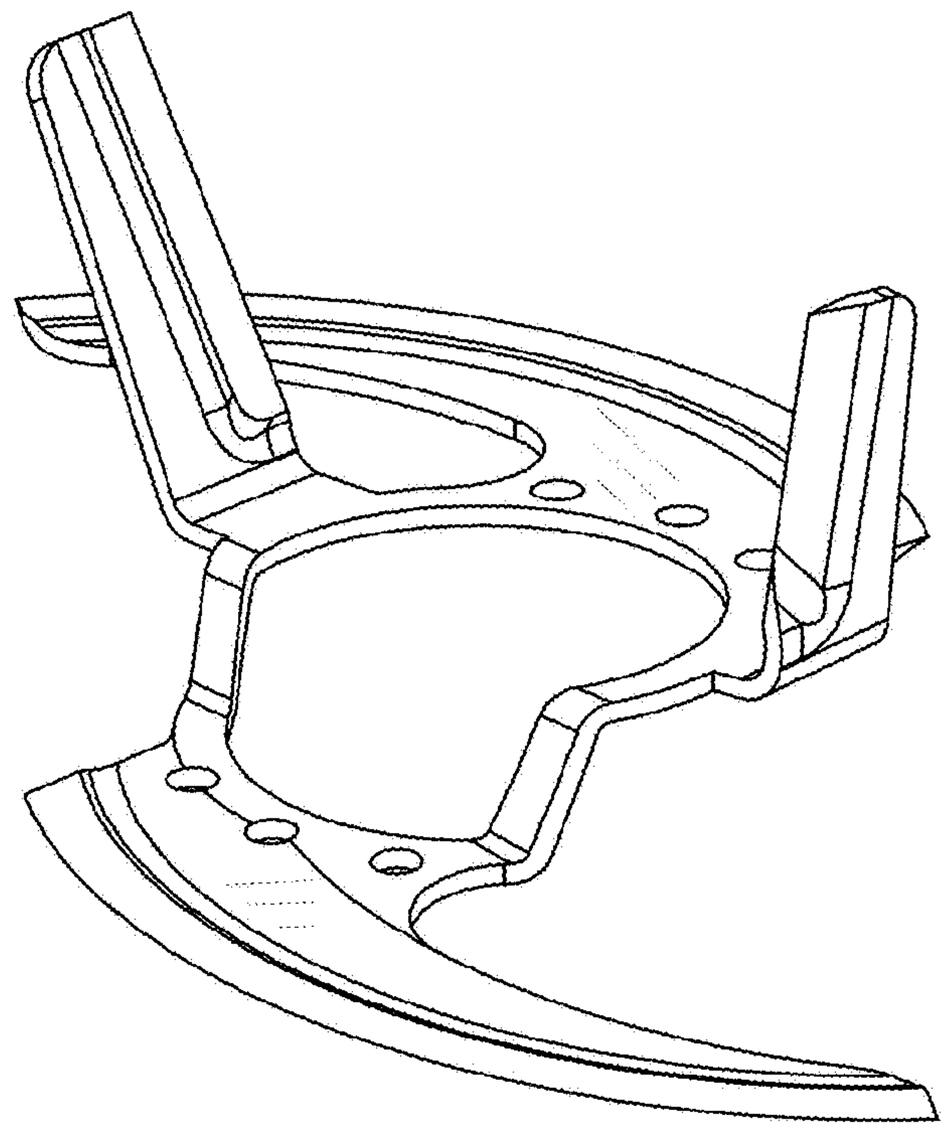

FIG. 7

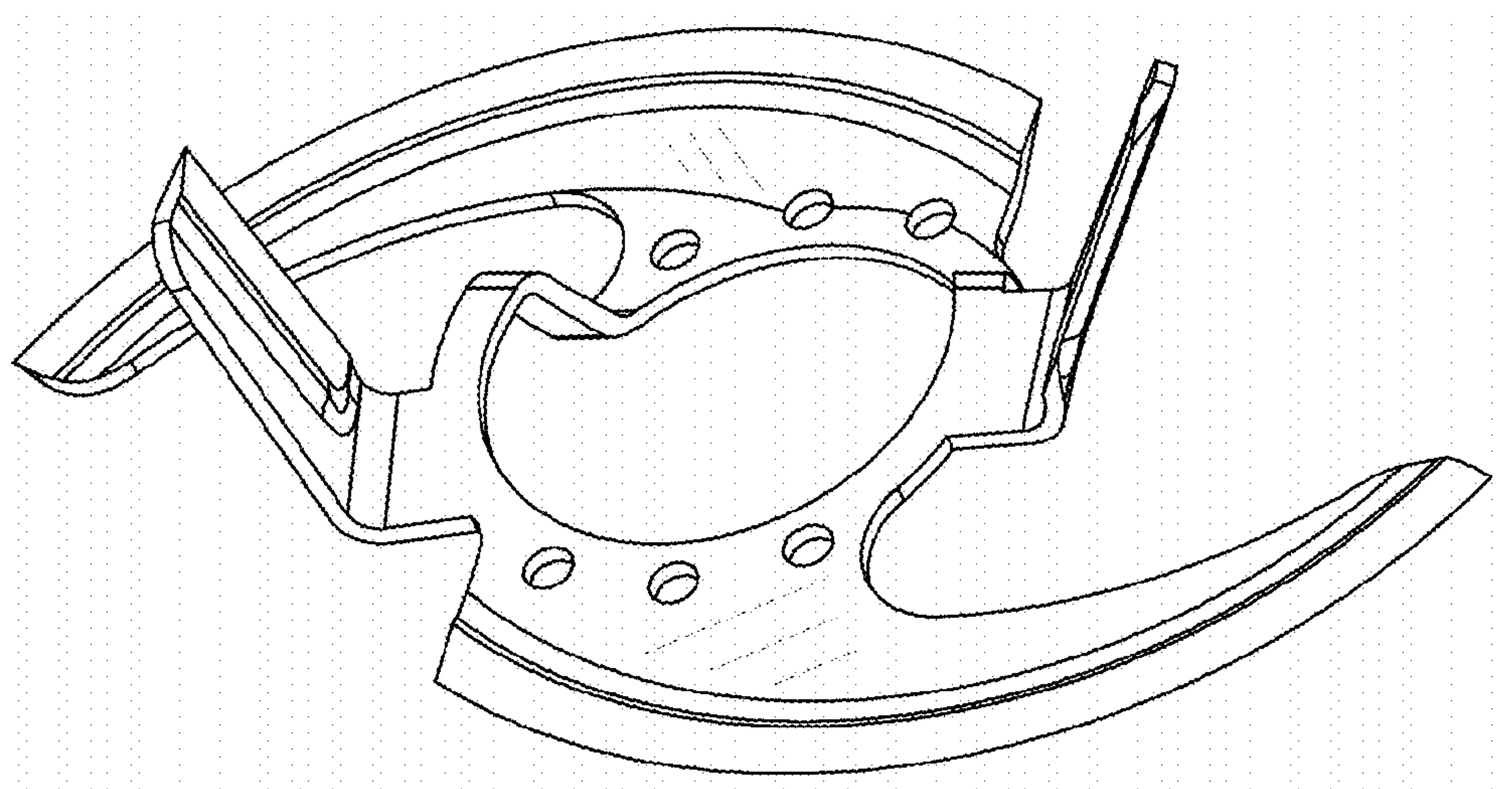

FIG. 8

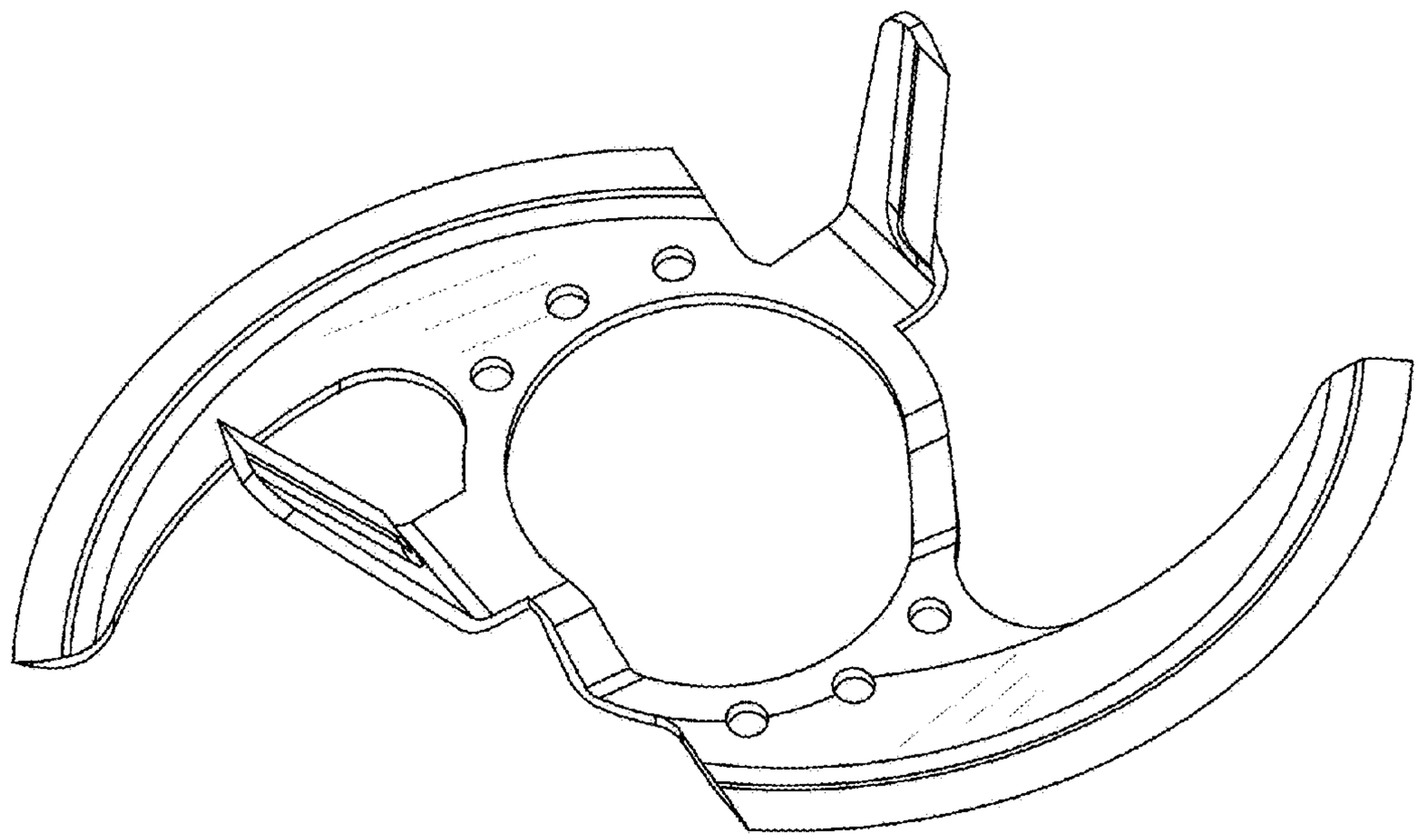

FIG. 9

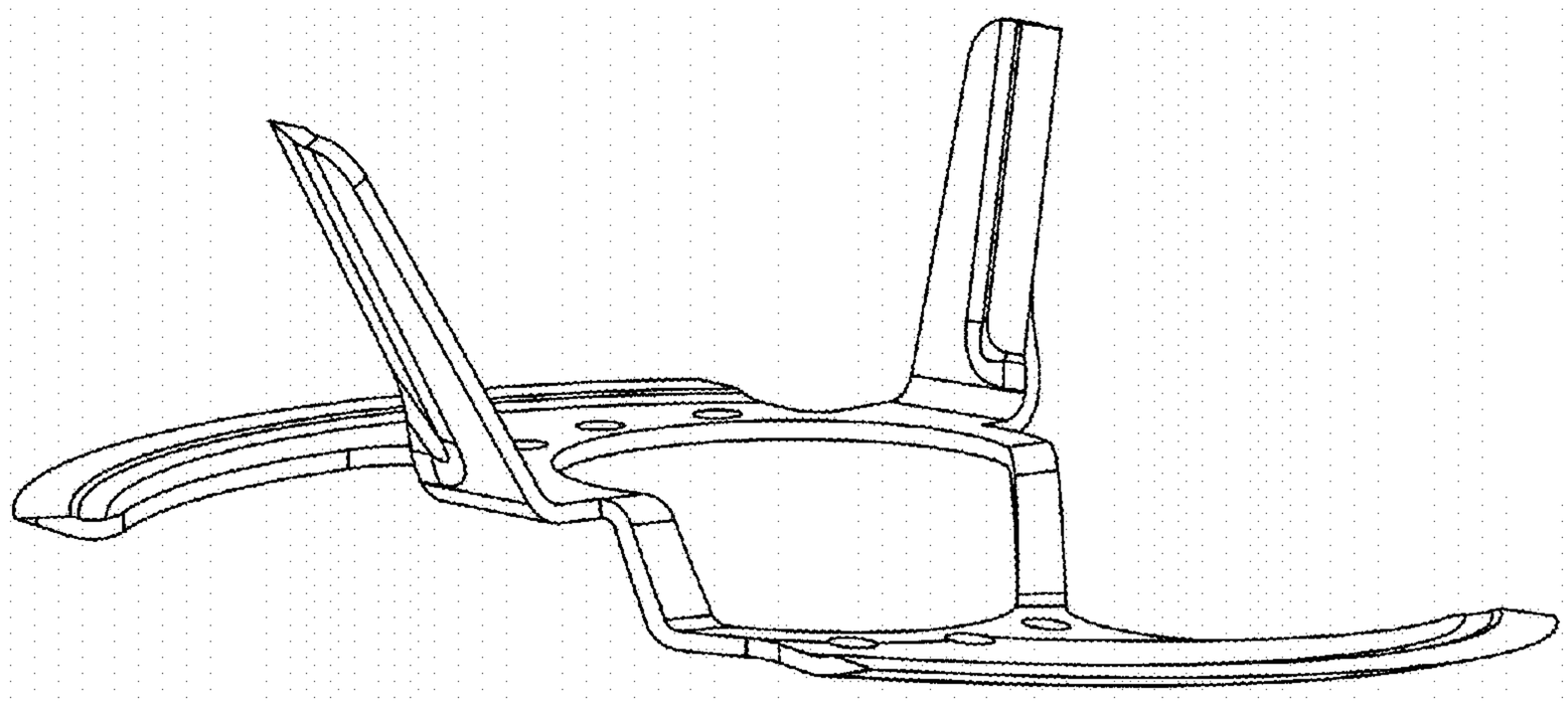

FIG. 10

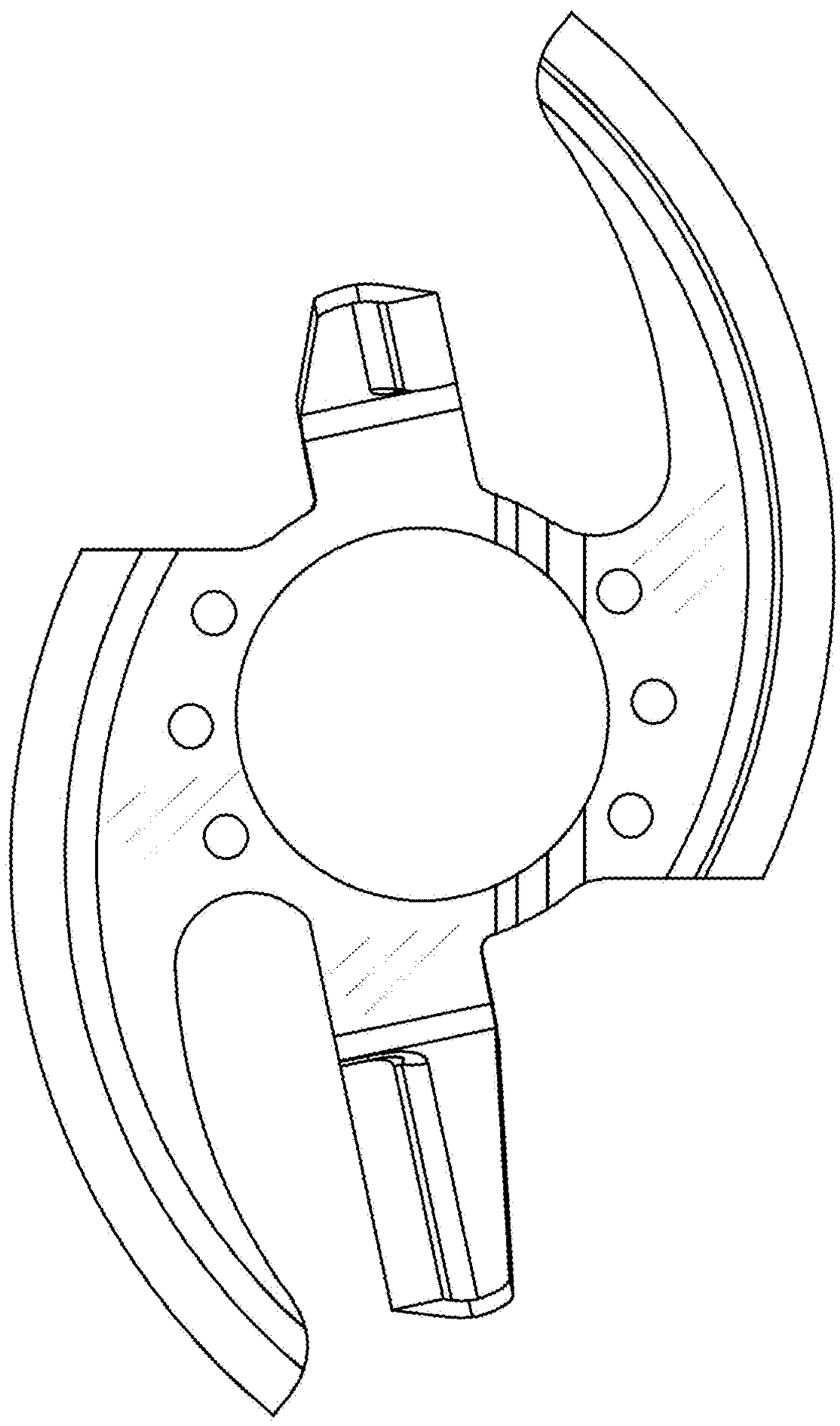

FIG. 11

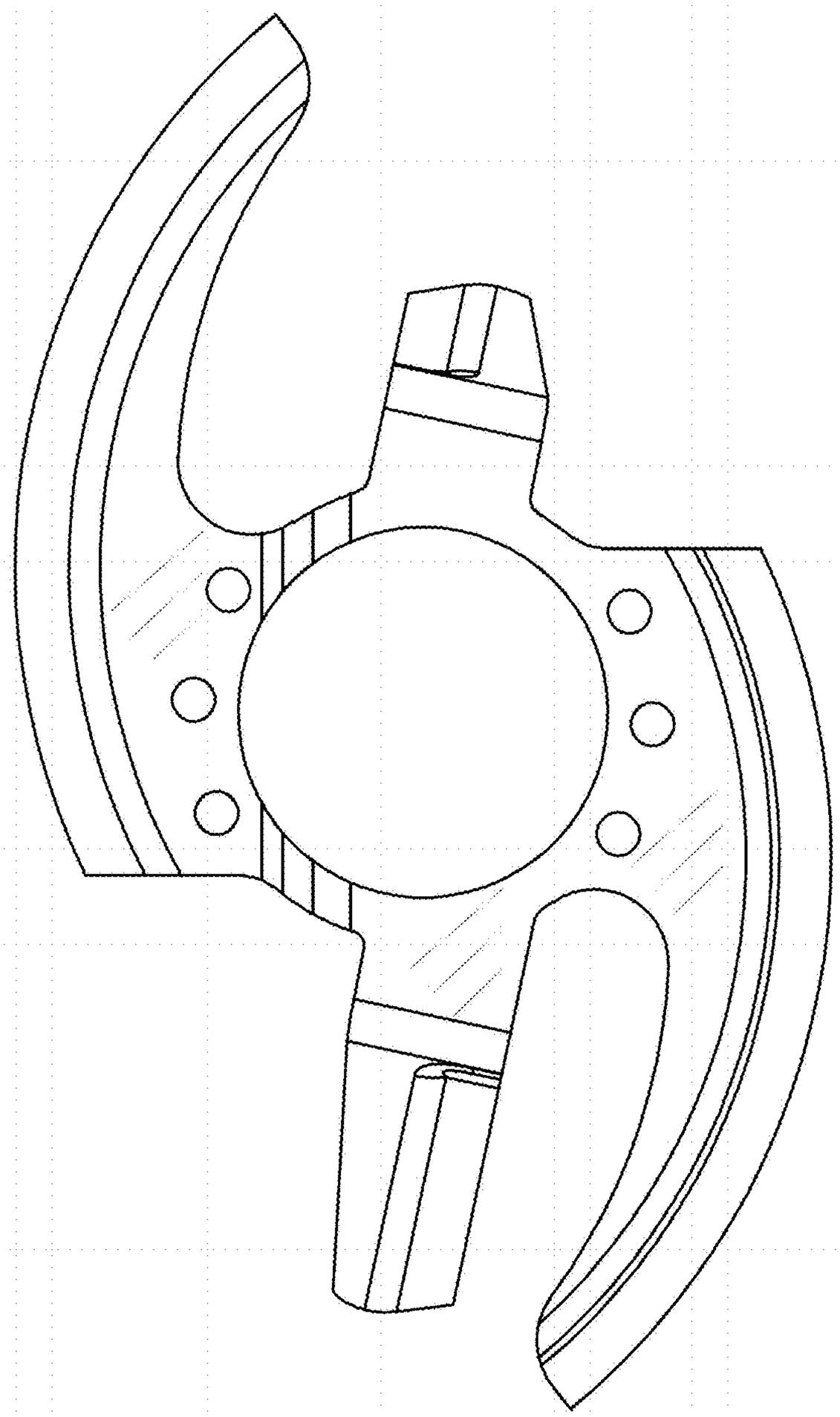

FIG. 12

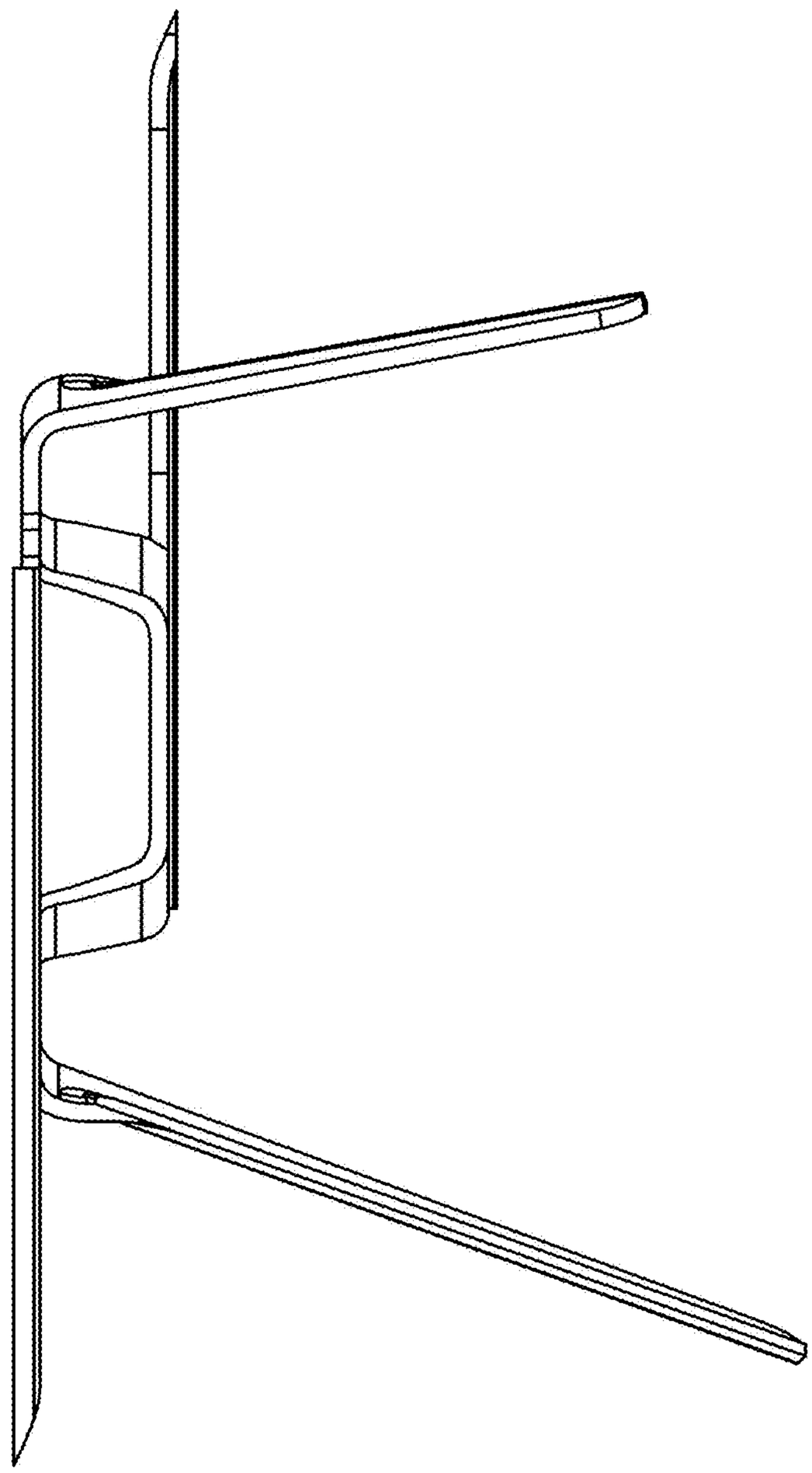

FIG. 13

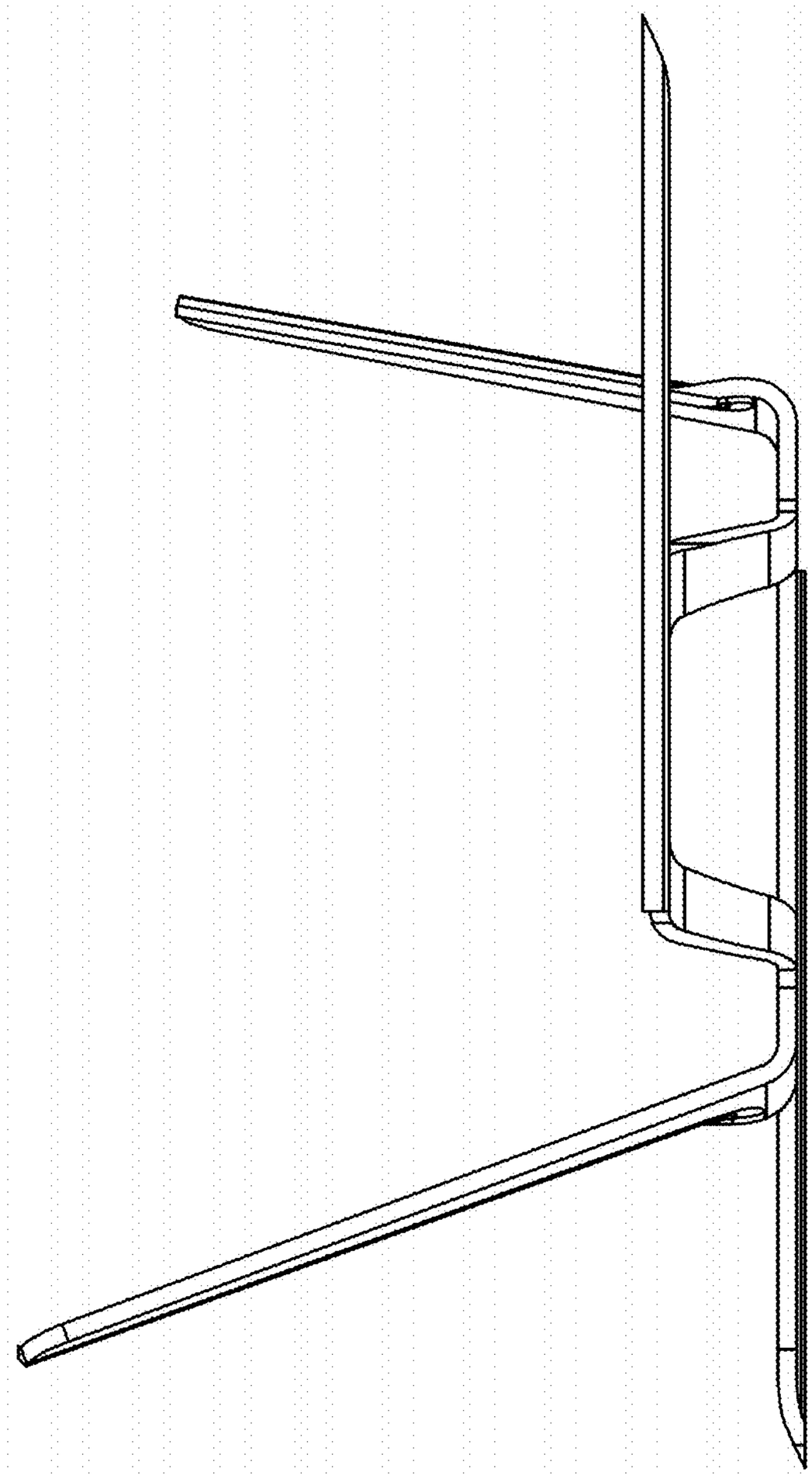

FIG. 14

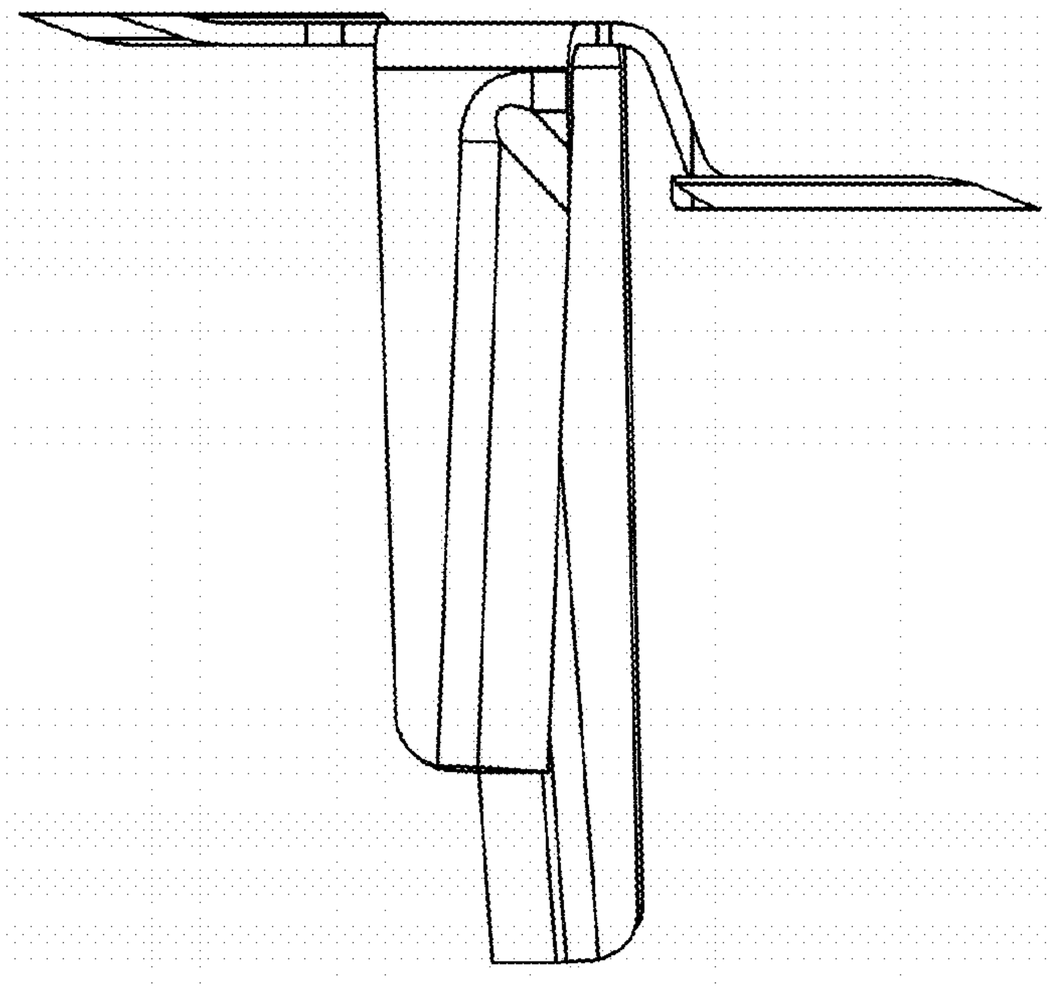

FIG. 15

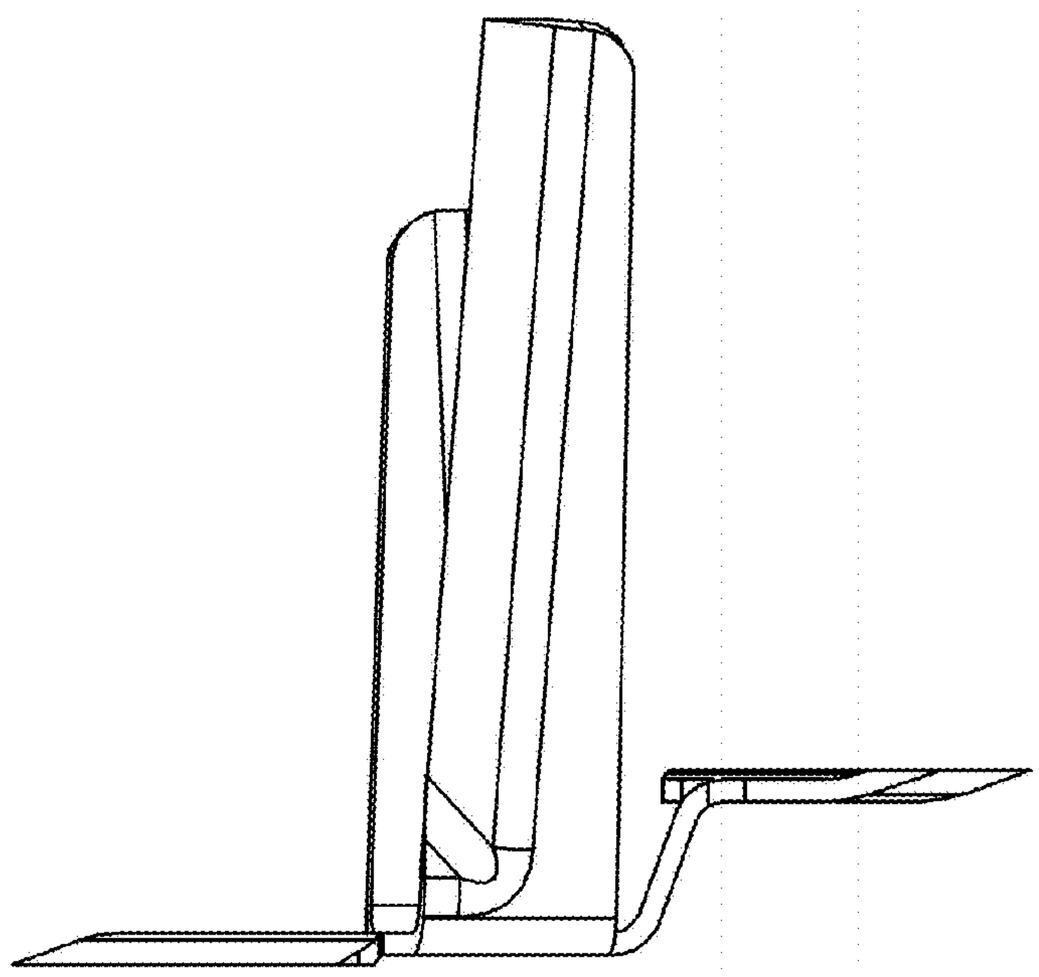

FIG. 16

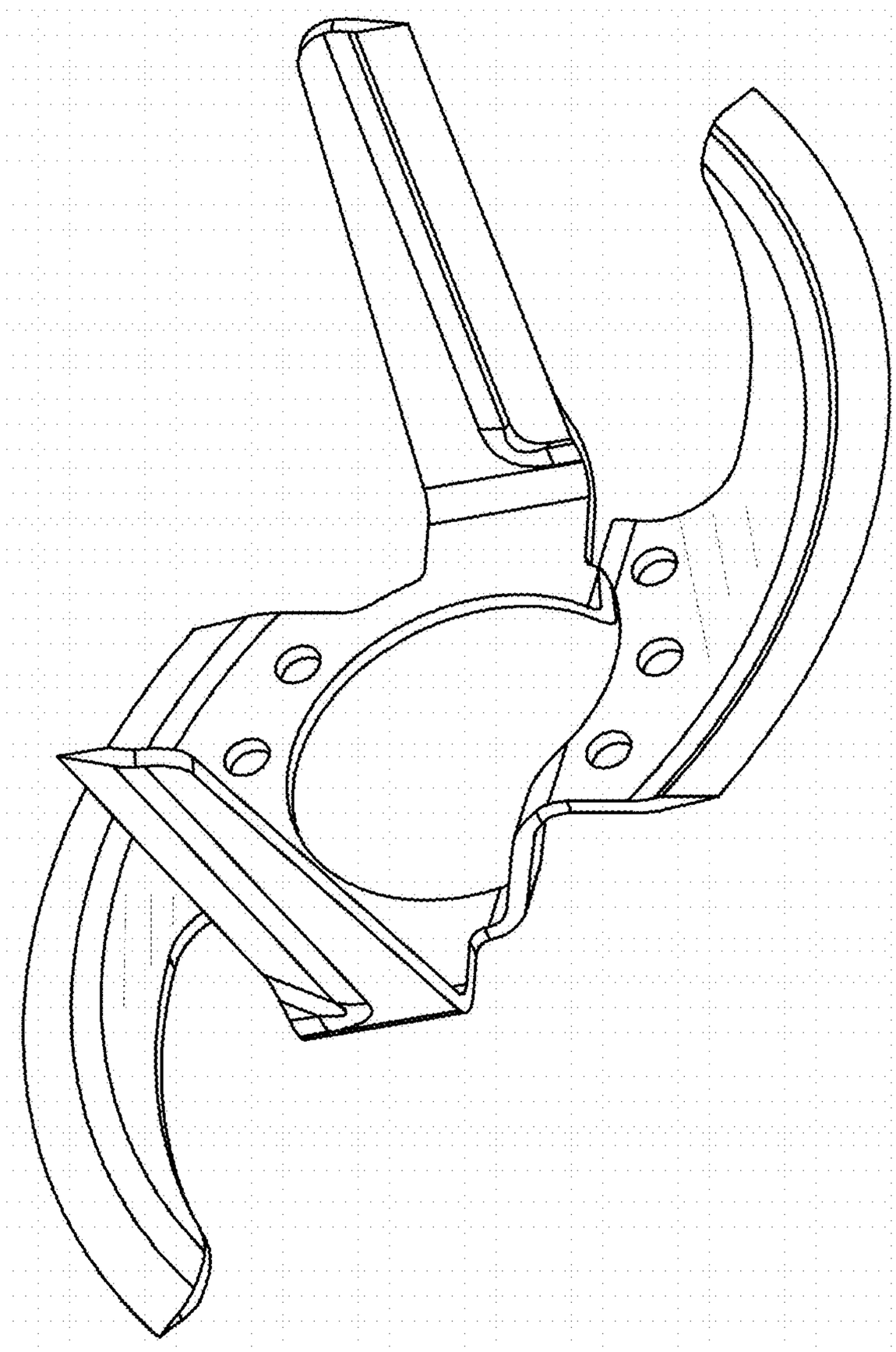

FIG. 17

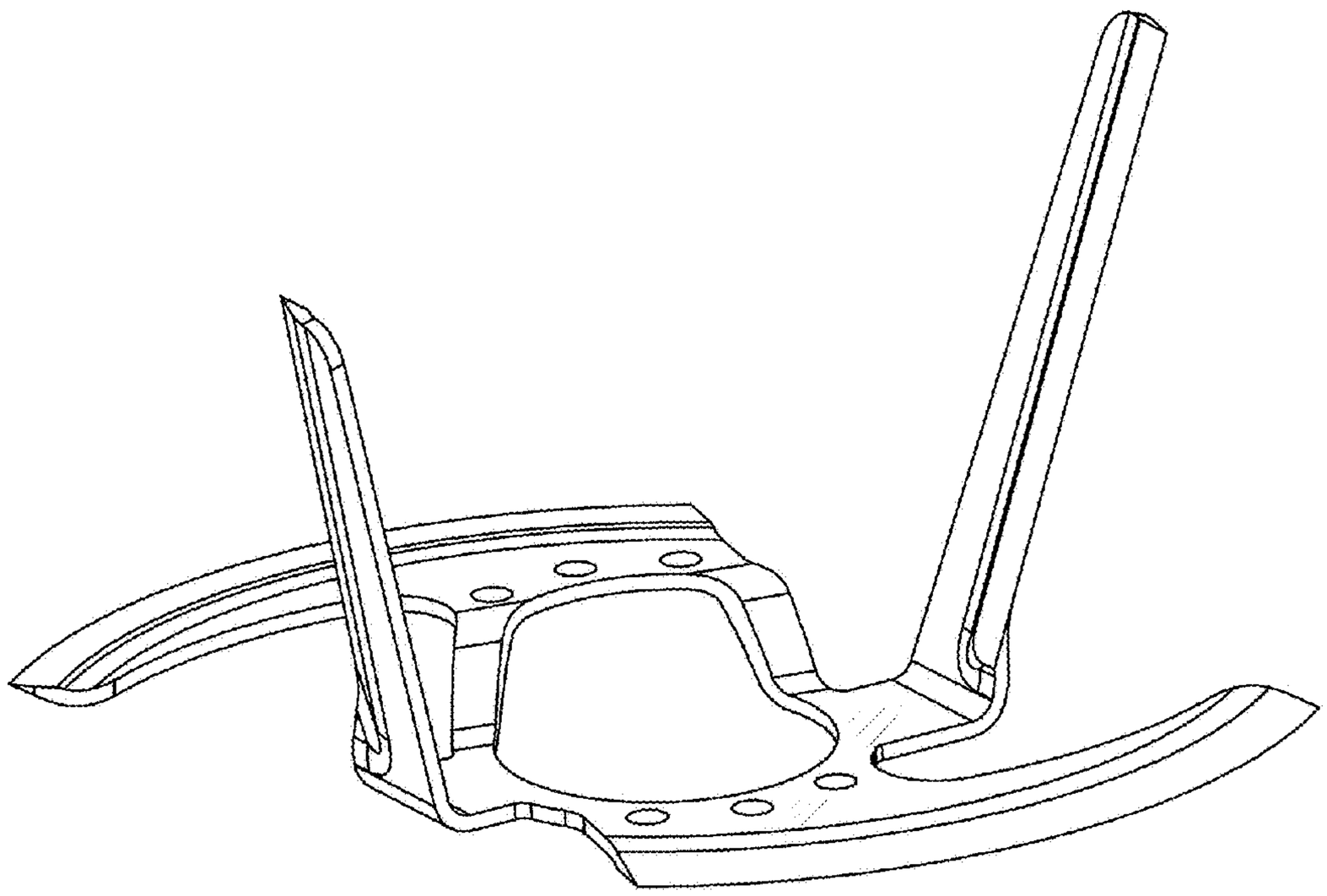

FIG. 18

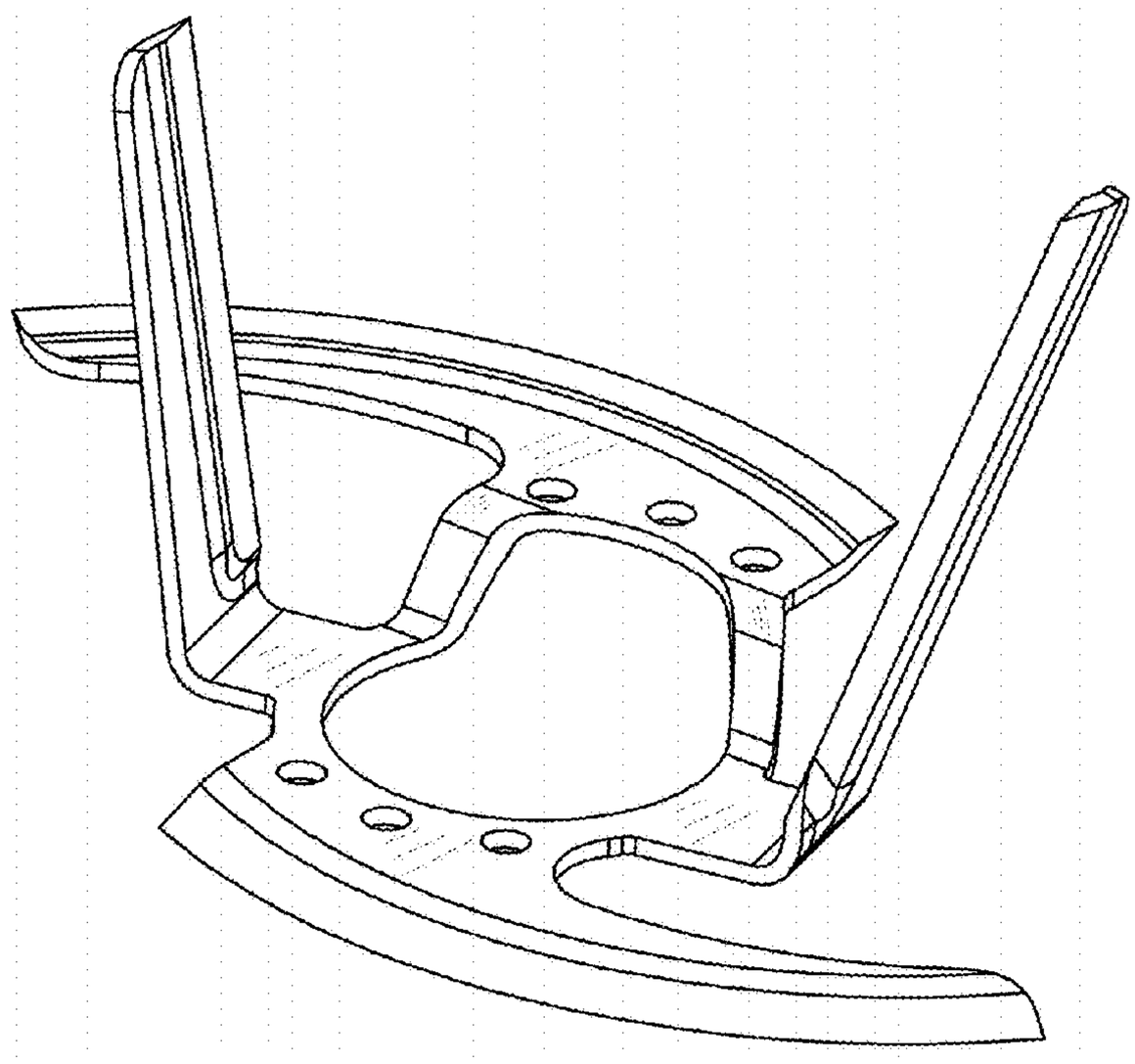

FIG. 19

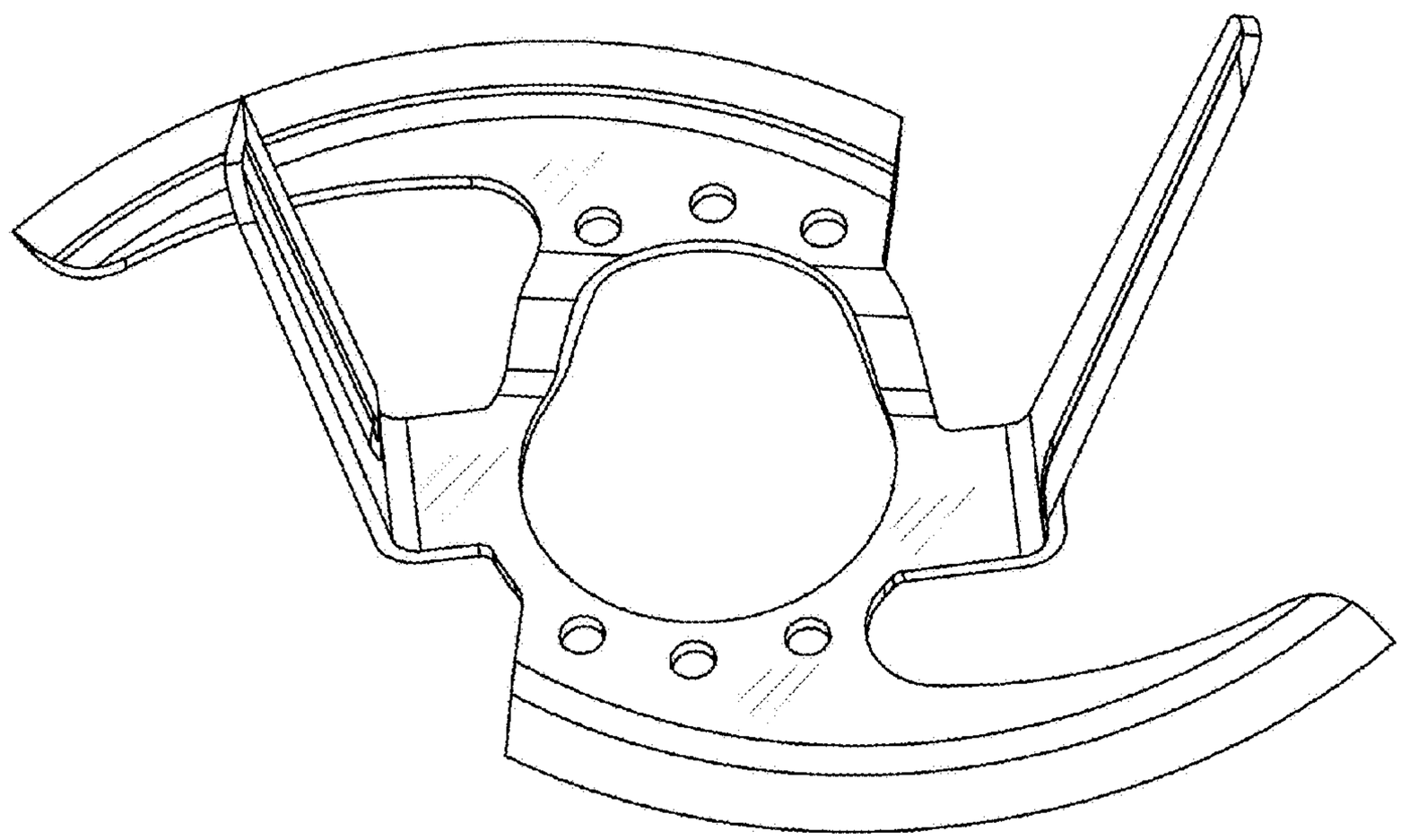

FIG. 20