US00D708120S

(12) United States Design Patent

Iwabuchi

(10) Patent No.: US D708,120 S
(45) Date of Patent: ** Jul. 1, 2014

(54) **SIDEWALL PORTION OF AN AUTOMOBILE TIRE**

(71) Applicant: **Bridgestone Corporation**, Tokyo (JP)

(72) Inventor: **Sotaro Iwabuchi**, Tokyo (JP)

(73) Assignee: **Bridgestone Corporation**, Tokyo (JP)

(**) Term: **14 Years**

(21) Appl. No.: **29/468,161**

(22) Filed: **Sep. 26, 2013**

(30) **Foreign Application Priority Data**

Mar. 27, 2013 (JP) 2013-006840

(51) **LOC (10) Cl.** **12-15**

(52) **U.S. Cl.**
USPC **D12/605**

(58) **Field of Classification Search**
USPC ..... D12/500–501, 544, 579, 600–605; 152/523–524, DIG. 12, 555; D7/588, D7/396.4–396.5
See application file for complete search history.

(56) **References Cited**

U.S. PATENT DOCUMENTS

D452,203	S	*	12/2001	Kajikawa	D12/605
D612,802	S	*	3/2010	Nakamura	D12/605
D647,044	S	*	10/2011	Takemoto	D12/605
D668,210	S	*	10/2012	Sato	D12/605
D669,845	S	*	10/2012	Iwabuchi	D12/605
D681,546	S	*	5/2013	Sato	D12/605
D681,547	S	*	5/2013	Sato	D12/605
D683,695	S	*	6/2013	Takeshima	D12/605

* cited by examiner

Primary Examiner — Stacia Cadmus
(74) *Attorney, Agent, or Firm* — Sughrue Mion, PLLC

(57) **CLAIM**

The ornamental design for a sidewall portion of an automobile tire, as shown and described.

DESCRIPTION

FIG. **1** is a perspective view of a sidewall portion of an automobile tire according to my design;
FIG. **2** is a front view thereof;
FIG. **3** is a top view thereof;
FIG. **4** is a right side view thereof;
FIG. **5** is a fragmentary enlarged view showing the details of the sidewall portion defied by cross-section by lines A-A and B-B in FIG. **2**;
FIG. **6** is a section view taken along line **6-6** in FIG. **5**; and,
FIG. **7** is a section view taken along line **7-7** in FIG. **5**.

1 Claim, 7 Drawing Sheets

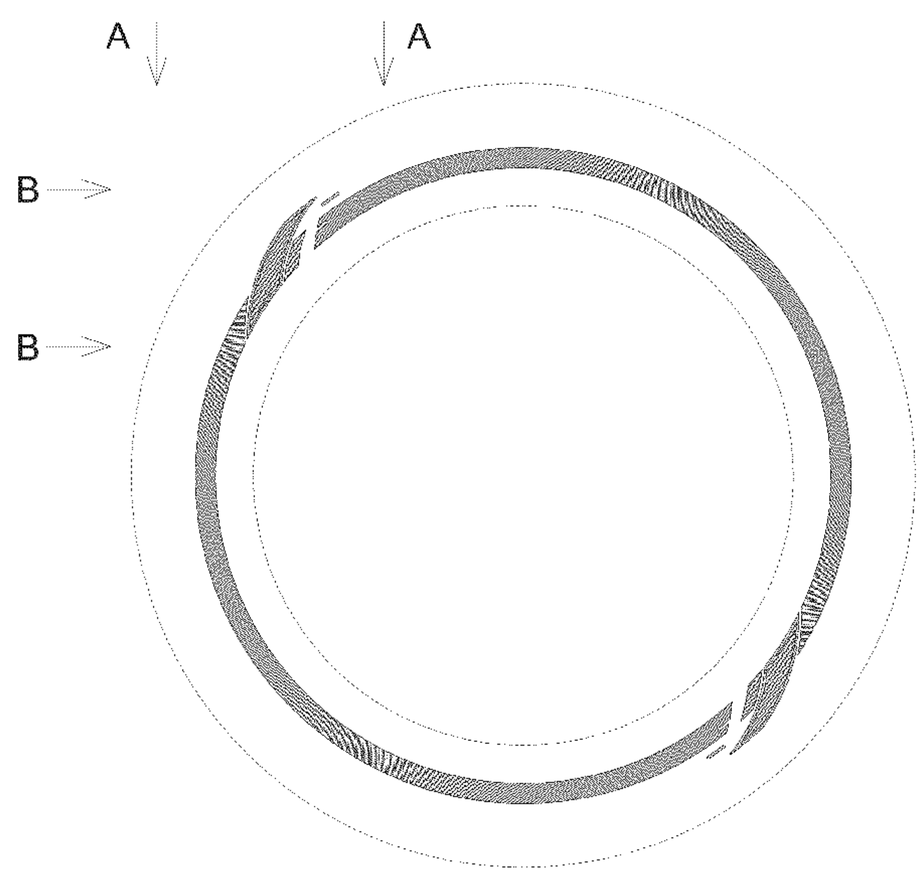

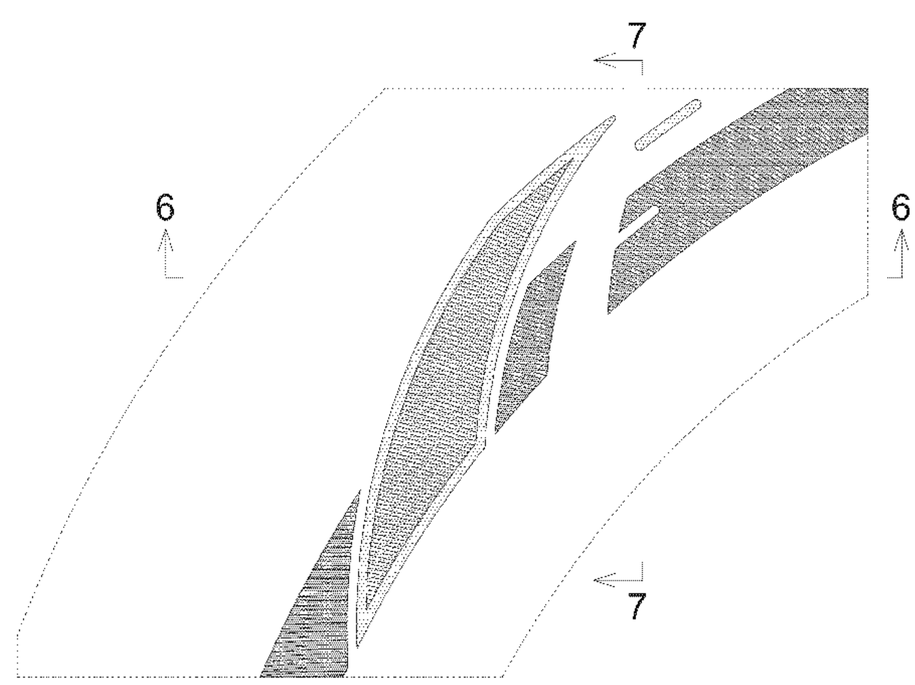

FIG. 1

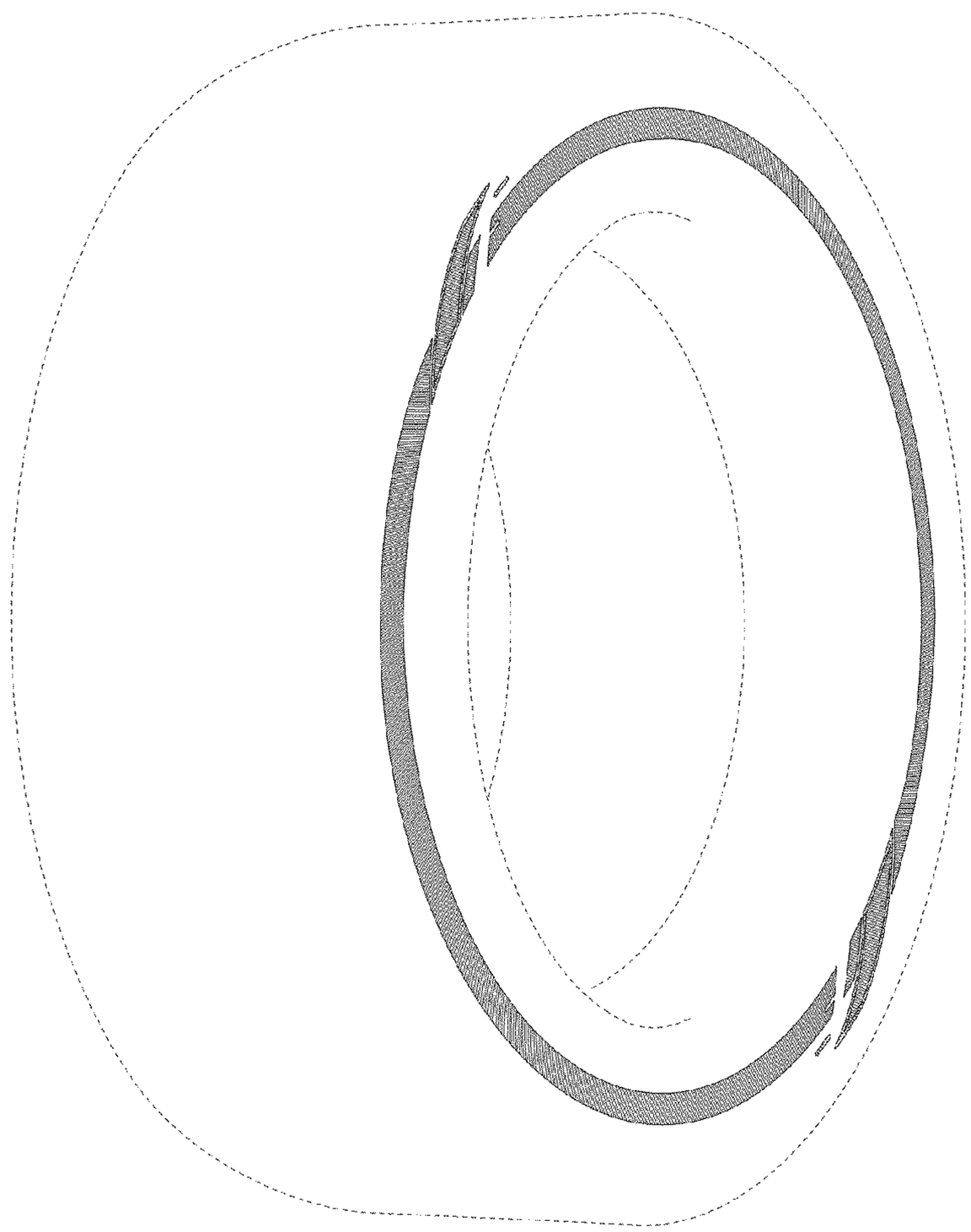

FIG. 2

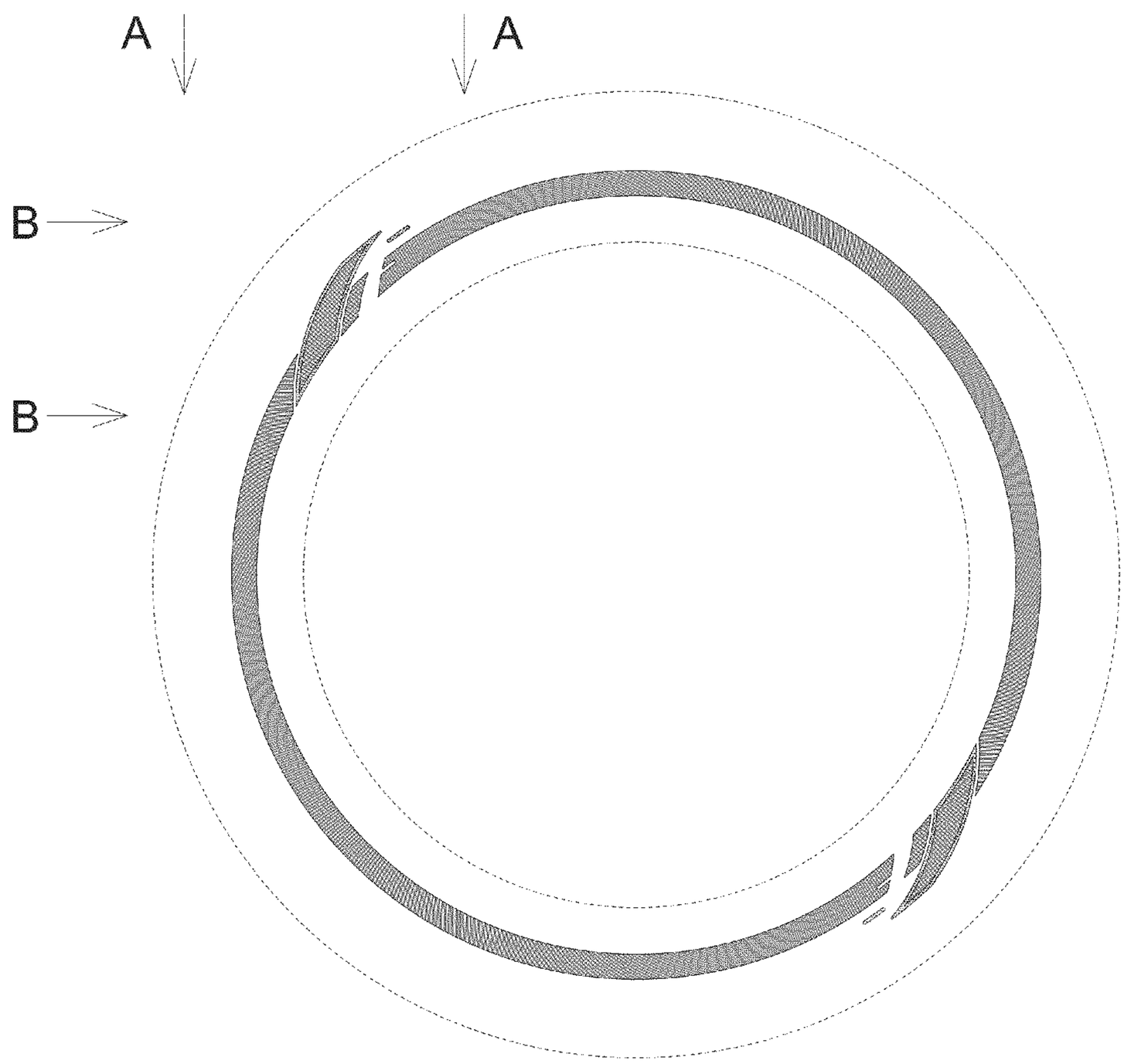

FIG. 3

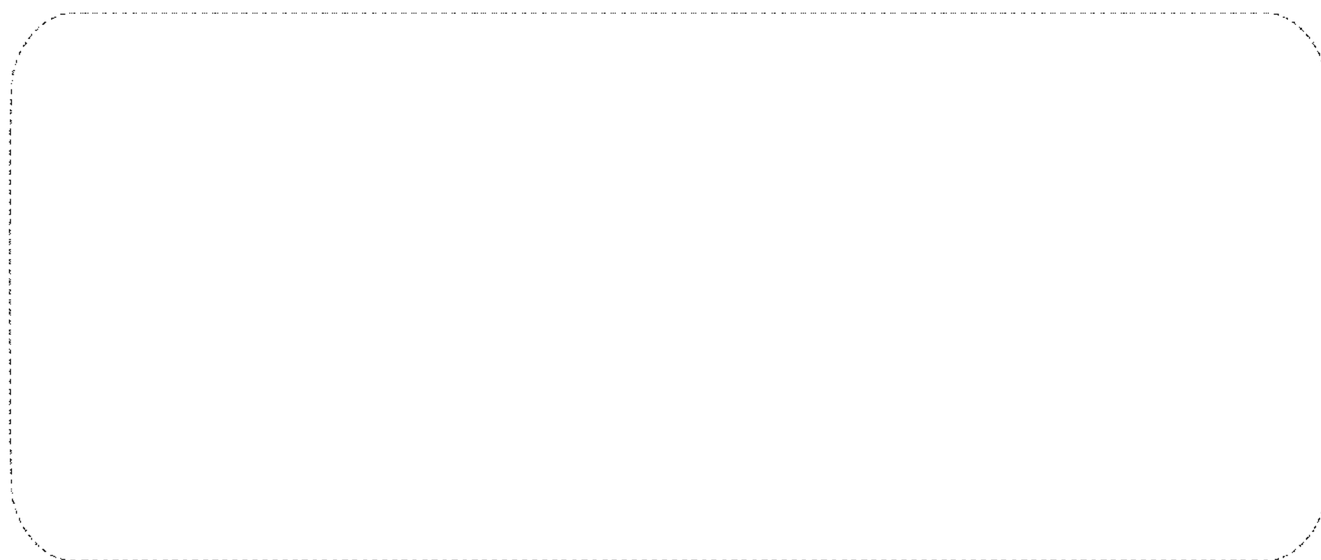

FIG. 4

FIG. 5

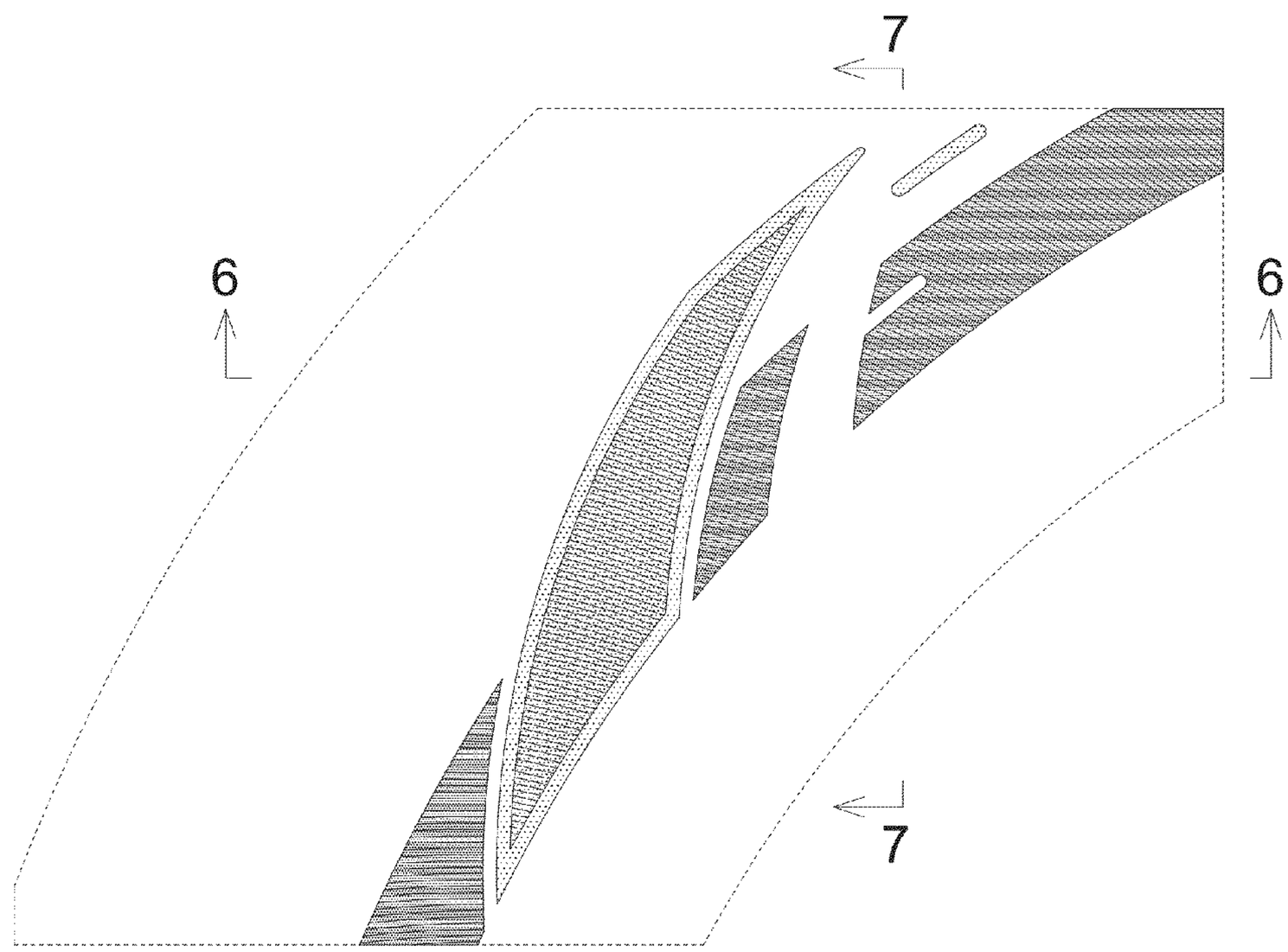

FIG. 6

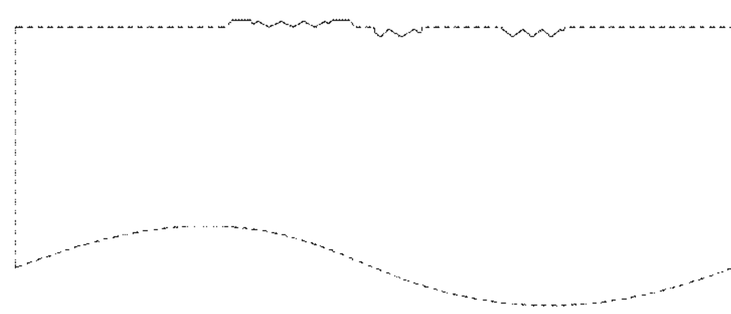
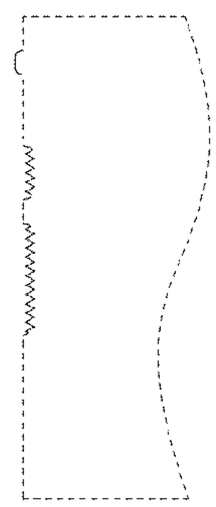
FIG. 7