US00D707731S

(12) United States Design Patent

Healey et al.

(10) Patent No.: US D707,731 S
(45) Date of Patent: ** Jun. 24, 2014

(54) **VEHICLE MOUNT OF A GRADER ASSEMBLY**

(71) Applicant: **Challenge Implements Holdings Pty Limited**, New South Wales (AU)

(72) Inventors: **Craig Healey**, New South Wales (AU); **John Healey**, New South Wales (AU); **Jack Rahilly**, New South Wales (AU); **Daniel Webb**, New South Wales (AU)

(73) Assignee: **Challenge Implements Holdings Pty Ltd**, New South Wales (AU)

(**) Term: **14 Years**

(21) Appl. No.: **29/457,514**

(22) Filed: **Jun. 11, 2013**

Related U.S. Application Data

(63) Continuation of application No. 29/434,669, filed on Oct. 16, 2012, now abandoned.

(30) **Foreign Application Priority Data**

Apr. 17, 2012 (AU) 11905/2012

(51) **LOC (10) Cl.** **15-03**

(52) **U.S. Cl.**
USPC **D15/32**

(58) **Field of Classification Search**
USPC D15/10–12, 22–26, 28, 32; 37/234, 37/407, 435, 441, 442; 172/789, 776, 788, 172/791, 796, 797
See application file for complete search history.

(56) **References Cited**

U.S. PATENT DOCUMENTS

2,774,155	A		12/1956	Hipp	
3,234,669	A		2/1966	Kachnik et al.	
D216,874	S	*	3/1970	Cline	D15/32
D218,516	S	*	8/1970	Lesniewski et al.	D15/32
D219,809	S	*	2/1971	Coontz	D15/32
3,598,186	A		8/1971	Coontz	
3,876,092	A	*	4/1975	MacDonald	414/686
D248,302	S		6/1978	Zoller	
4,124,080	A	*	11/1978	McCanse	172/445.2
D272,250	S	*	1/1984	Larsson	D15/28
4,463,507	A		8/1984	Gaub	
D284,767	S	*	7/1986	Clark et al.	D15/33
D331,380	S		12/1992	Craddock	
5,332,331	A	*	7/1994	Critz et al.	404/96
5,411,102	A		5/1995	Nickels et al.	
5,427,185	A		6/1995	Seal	
5,529,131	A		6/1996	Van Ornum	
D395,436	S		6/1998	Hagenbuch	
5,775,438	A		7/1998	Confoey et al.	

(Continued)

OTHER PUBLICATIONS

Australian Design Application No. 11905/2012, Grader Attachment Assembly and Components, Challenge Implements Holdings Pty Limited, Apr. 17, 2012.

Primary Examiner — Mark Goodwin
(74) *Attorney, Agent, or Firm* — Gordon & Jacobson, PC

(57) **CLAIM**

The ornamental design for a vehicle mount of a grader assembly, as shown and described.

DESCRIPTION

FIG. **1** is a perspective view of the vehicle mount of a grader assembly.
FIG. **2** is a bottom plan view thereof.
FIG. **3** is a top plan view thereof.
FIG. **4** is a left side view thereof.
FIG. **5** is a right side view thereof.
FIG. **6** is a rear view thereof; and,
FIG. **7** is a front view thereof.

1 Claim, 7 Drawing Sheets

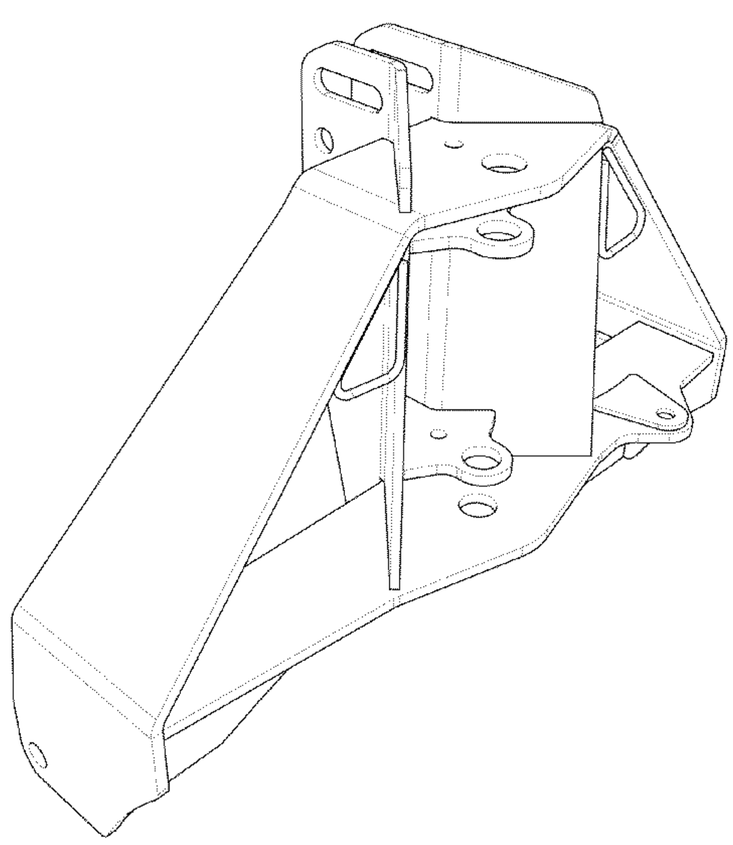

(56) **References Cited**

U.S. PATENT DOCUMENTS

D432,146	S	*	10/2000	Lindgren et al.	D15/32
D455,762	S	*	4/2002	Kaczmarski et al.	D15/28
D456,821	S	*	5/2002	Ege et al.	D15/28
D457,173	S	*	5/2002	Harden et al.	D15/28
6,442,877	B1	*	9/2002	Quenzi et al.	37/281
6,585,059	B2	*	7/2003	Michael et al.	172/811
D623,668	S		9/2010	Bissell	
D672,370	S		12/2012	Becker	
D686,642	S	*	7/2013	Urase et al.	D15/28
D697,945	S	*	1/2014	Healey et al.	D15/28
D697,946	S	*	1/2014	Healey et al.	D15/32
2005/0102866	A1	*	5/2005	Sewell et al.	37/411
2007/0134081	A1	*	6/2007	Seabolt	414/723
2009/0146119	A1	*	6/2009	Bailey et al.	254/323
2010/0008723	A1	*	1/2010	Gordon	404/75

* cited by examiner

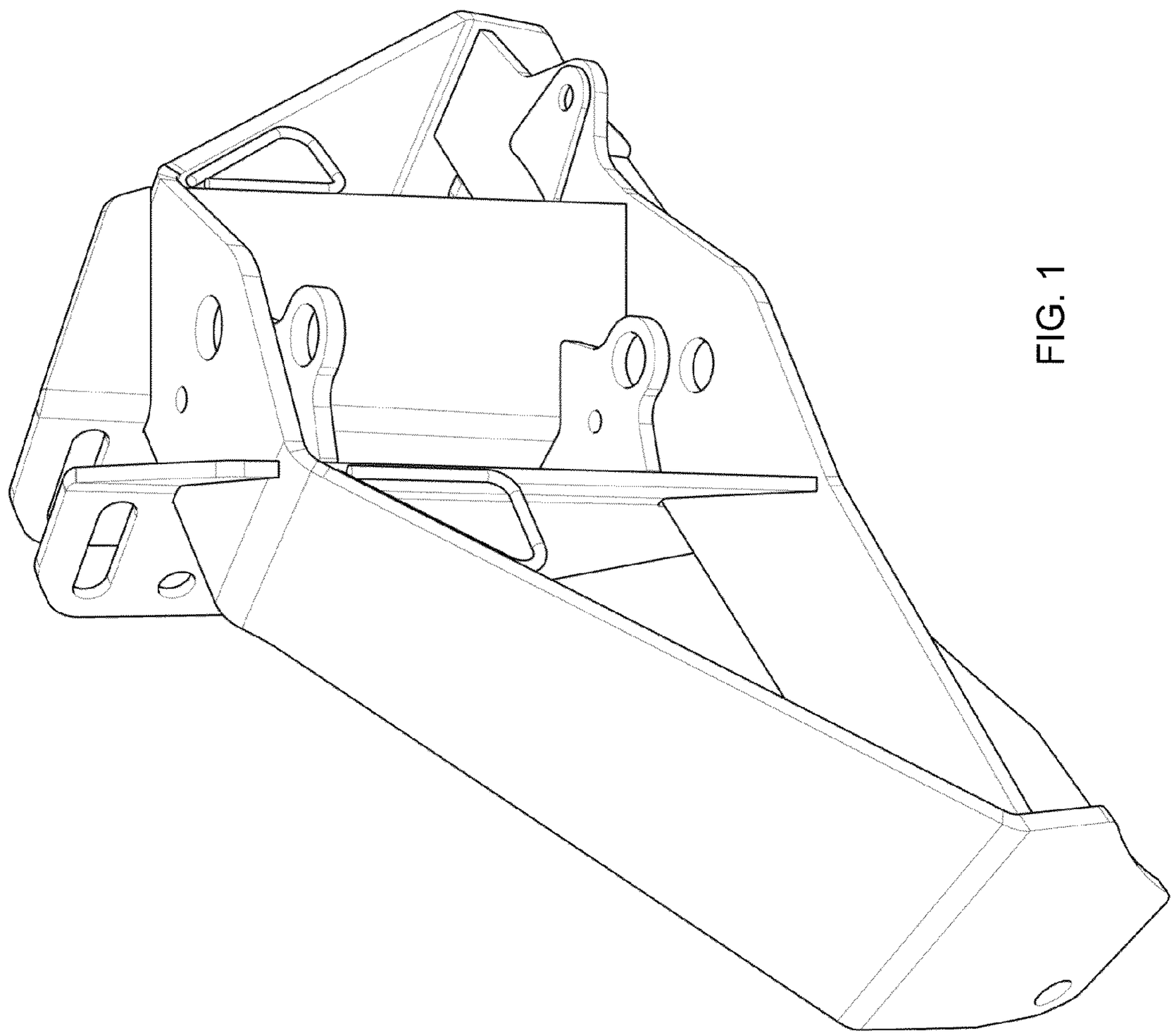

FIG. 1

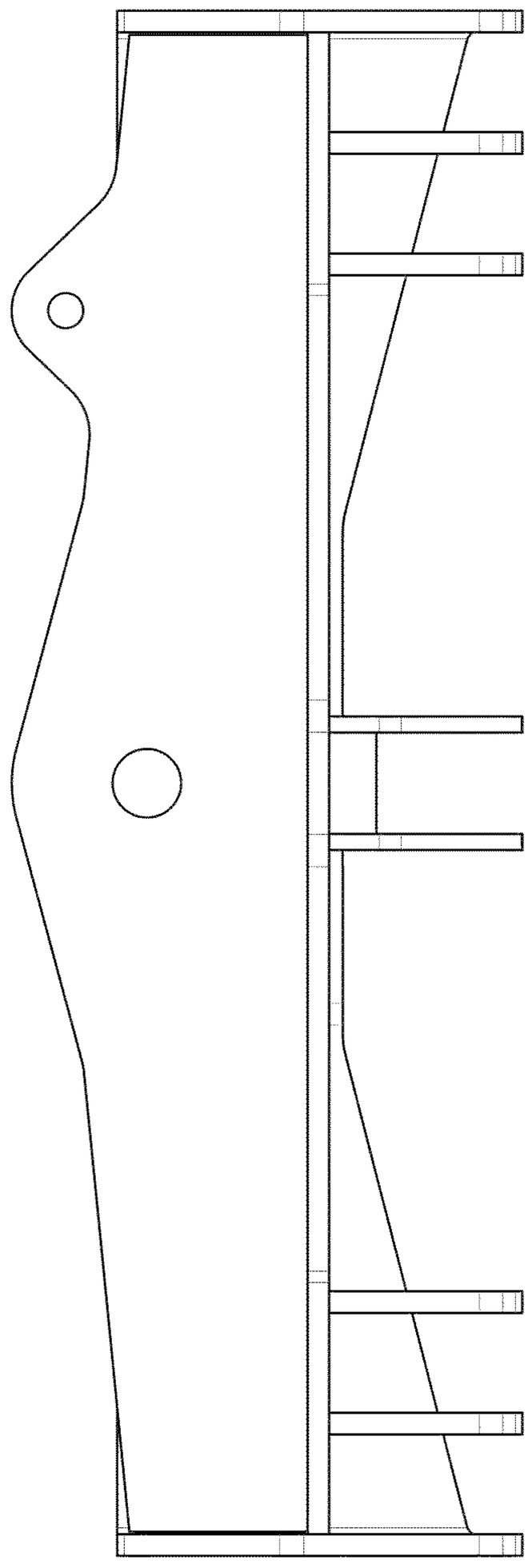

FIG. 2

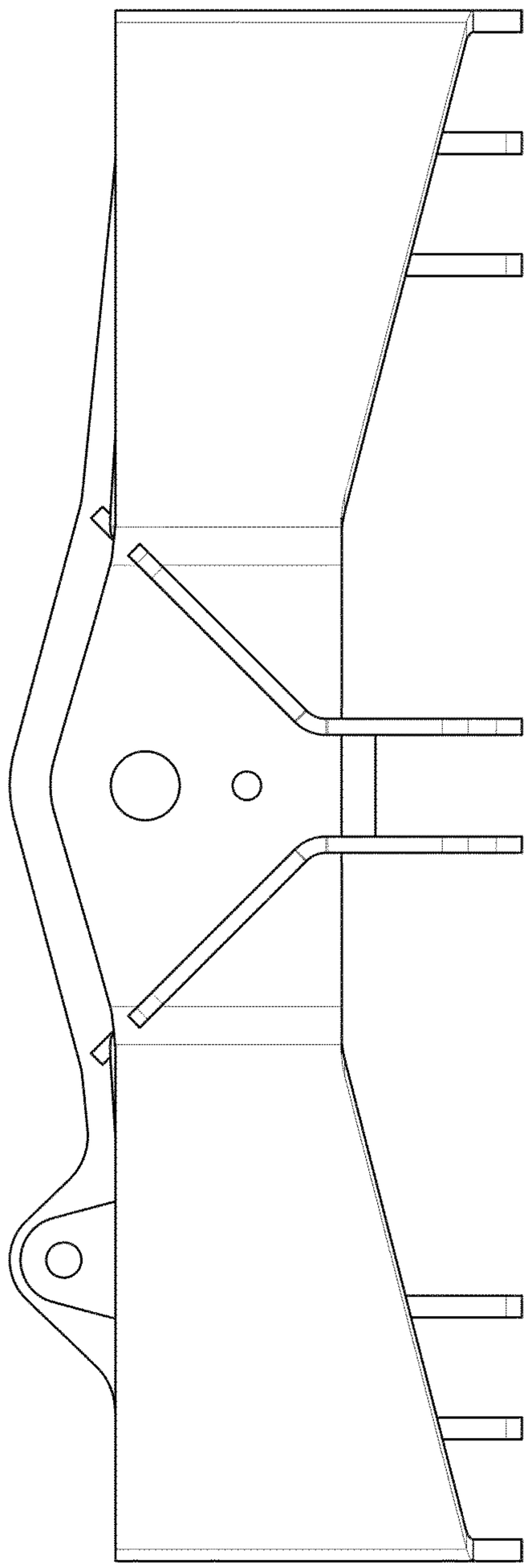

FIG. 3

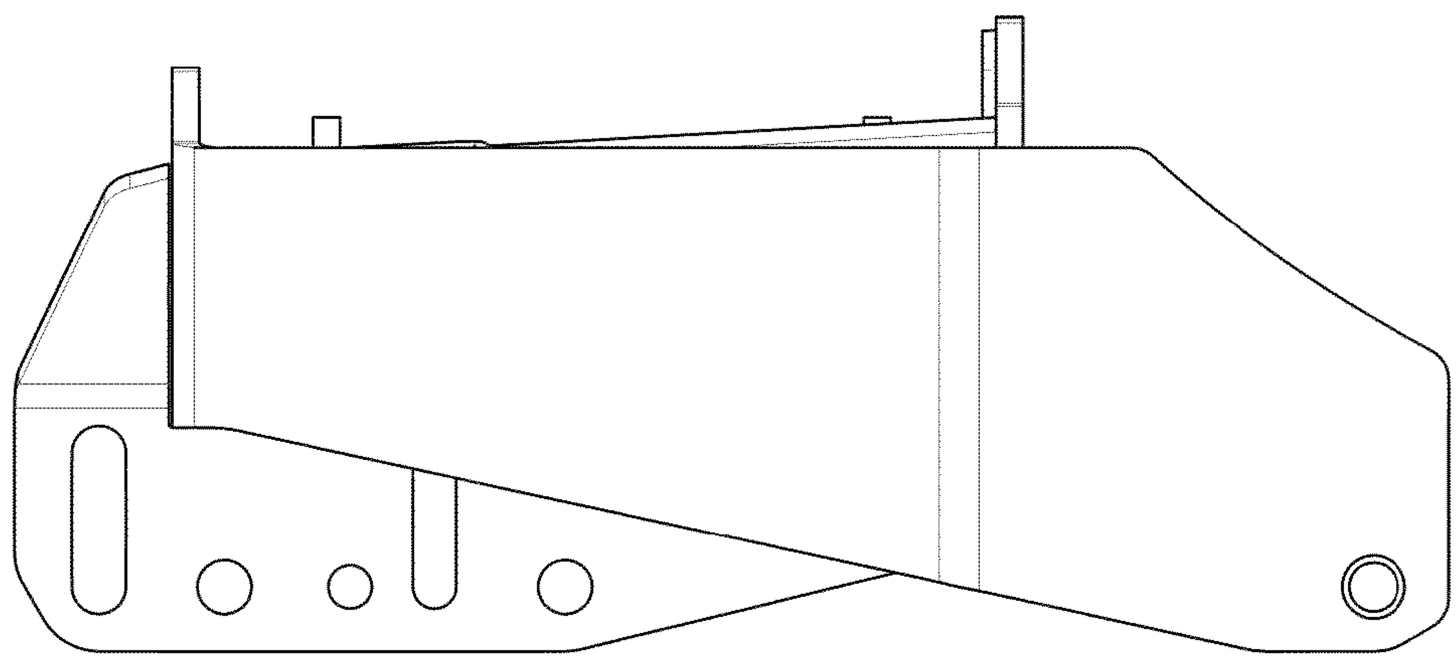

FIG. 4

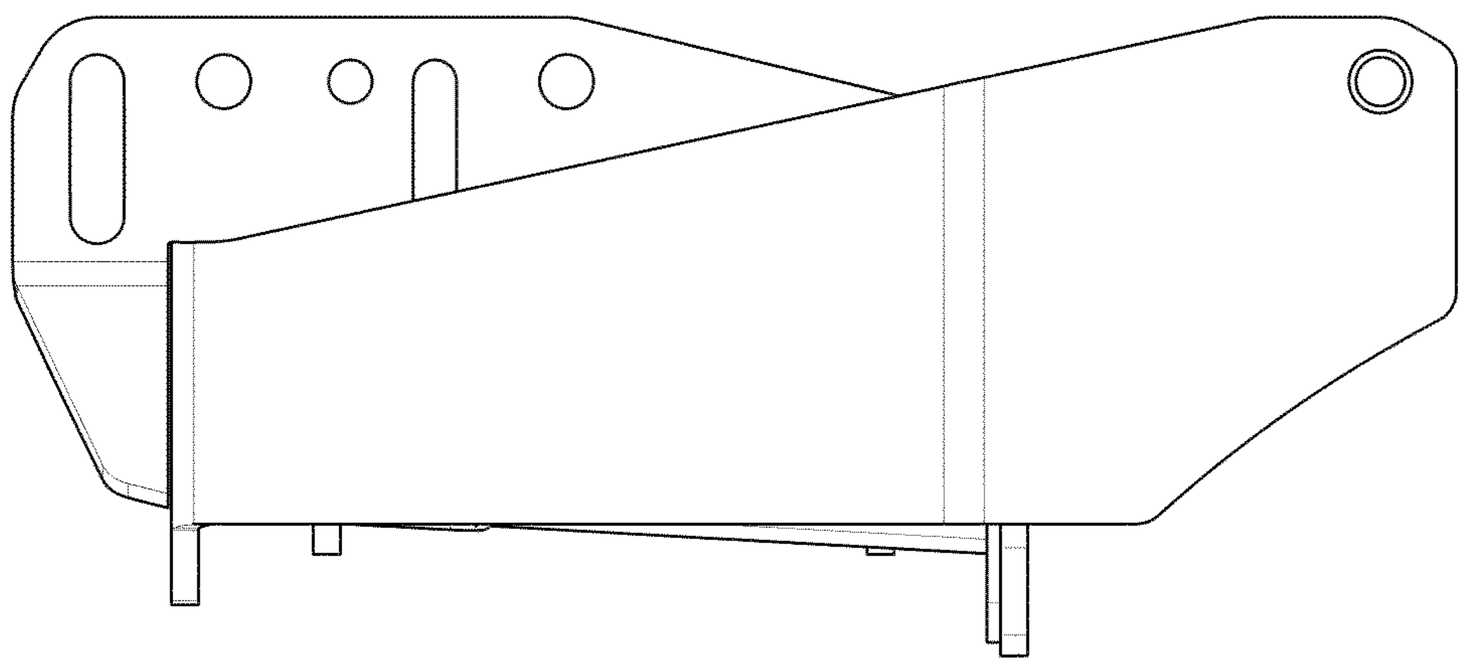

FIG. 5

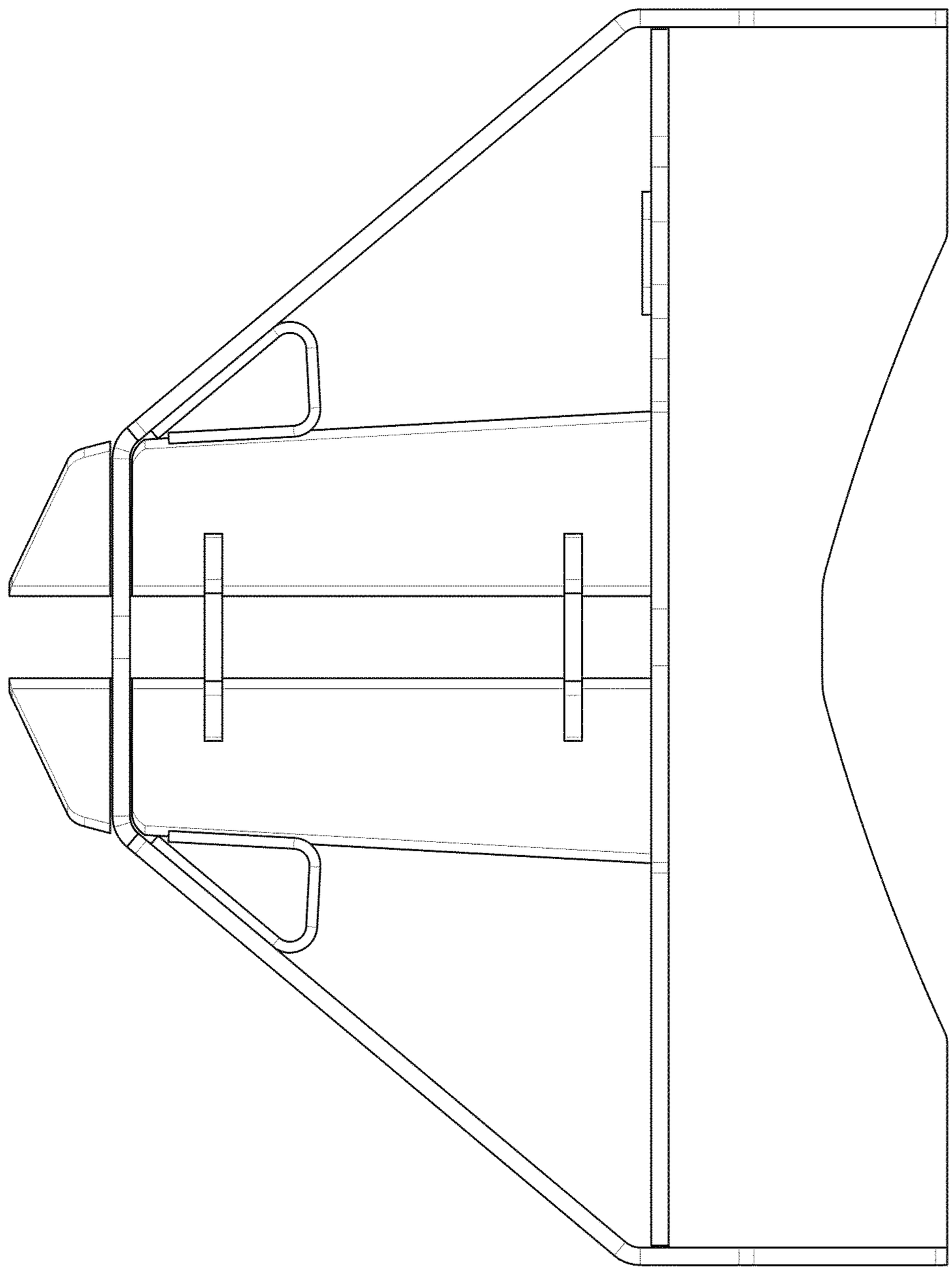

FIG. 6

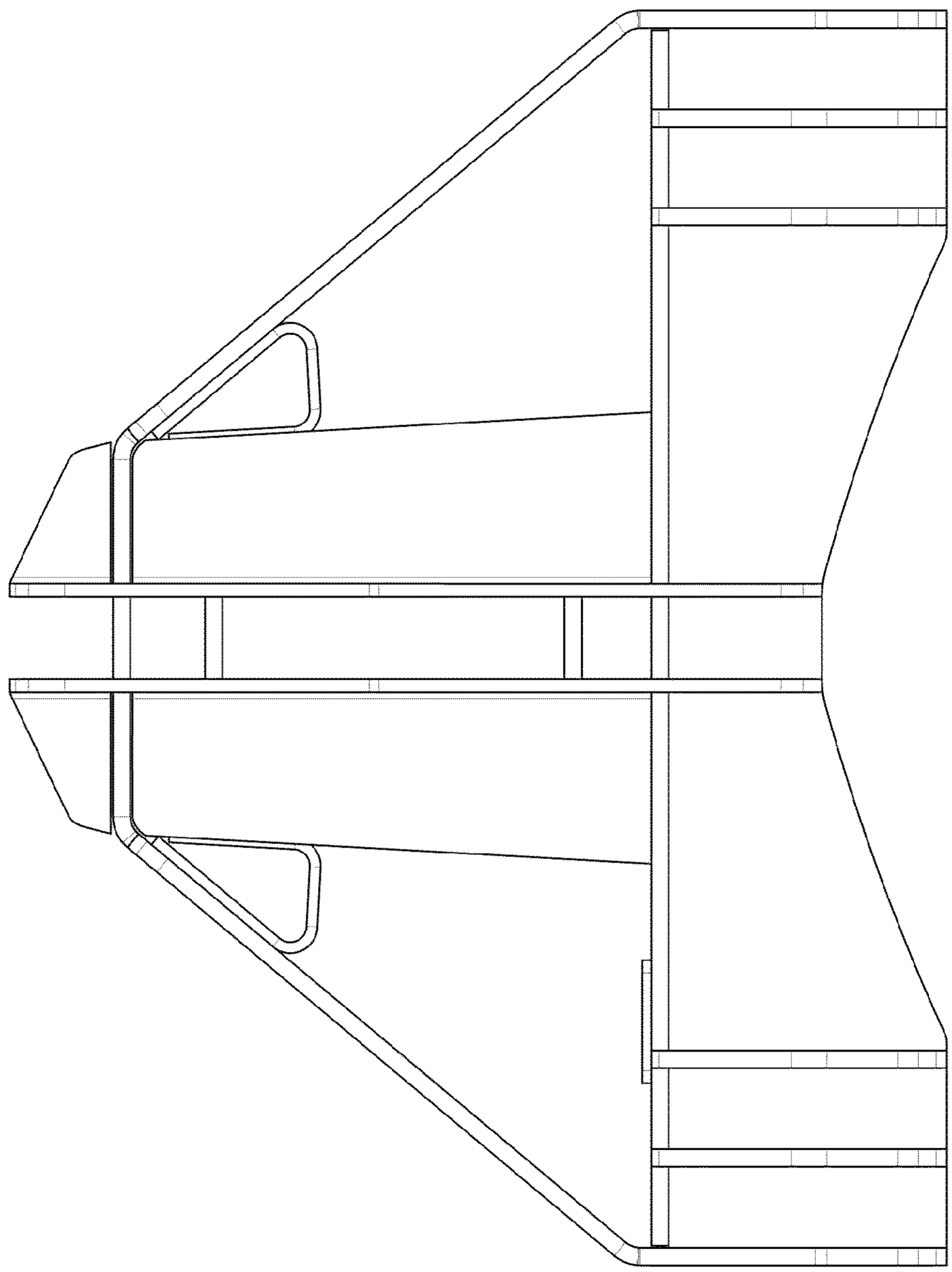

FIG. 7