US00D706840S

(12) United States Design Patent

Renski et al.

(10) Patent No.: US D706,840 S
(45) Date of Patent: ** Jun. 10, 2014

(54) **TIP FOR A GROUND ENGAGING MACHINE IMPLEMENT**

(75) Inventors: **William J. Renski**, Peoria, IL (US); **Sudha Kottakapu**, Peoria, IL (US)

(73) Assignee: **Caterpillar, Inc.**, Peoria, IL (US)

(**) Term: **14 Years**

(21) Appl. No.: **29/403,598**

(22) Filed: **Oct. 7, 2011**

(51) **LOC (10) Cl.** **15-03**

(52) **U.S. Cl.**
USPC **D15/29**

(58) **Field of Classification Search**
USPC D15/11, 28, 29; 37/456, 452, 450, 446, 37/454, 449, 453, 455, 903; 403/379.5, 403/DIG. 1; 111/152; 172/724, 730, 766, 172/770, 771, 721, 713, 699, 772
See application file for complete search history.

(56) **References Cited**

U.S. PATENT DOCUMENTS

1,384,701	A	*	7/1921	McMonegal	37/454
1,571,782	A	*	2/1926	Andrews	37/454
2,427,651	A		9/1947	Baer	
D182,143	S	*	2/1958	Petersen	D15/29
3,774,324	A	*	11/1973	Lafond	37/457
3,823,496	A	*	7/1974	Querci et al.	37/458
3,832,077	A	*	8/1974	Von Mehren	403/379.4
D251,431	S	*	3/1979	Klett et al.	D15/28
D252,461	S	*	7/1979	Korpi	D15/28
D255,119	S	*	5/1980	Korpi	D15/29
4,231,173	A	*	11/1980	Davis	37/457
D275,859	S	*	10/1984	Nilsson	D15/28
D296,442	S	*	6/1988	Broomhall	D15/29
4,980,980	A	*	1/1991	Schadov et al.	37/452
D336,476	S	*	6/1993	Garman	D15/28
D339,592	S	*	9/1993	Johansson	D15/29
D345,364	S	*	3/1994	Robinson	D15/29
D352,044	S	*	11/1994	Hahn	D15/29
5,423,138	A	*	6/1995	Livesay et al.	37/456
D365,577	S	*	12/1995	Ruvang	D15/29
5,561,925	A	*	10/1996	Livesay	37/455

(Continued)

FOREIGN PATENT DOCUMENTS

EP	0 411 486 A1	2/1991
EP	2 011 927 A2	1/2009

OTHER PUBLICATIONS

Caterpillar, Inc., Cat® K Series™ Tooth Systems, brochure (4 pages), 2006.

(Continued)

Primary Examiner — Mark Goodwin

(74) *Attorney, Agent, or Firm* — SAIDMAN DesignLaw Group

(57) **CLAIM**

The ornamental design for a tip for a ground engaging machine implement, as shown and described.

DESCRIPTION

FIG. **1** is a perspective view of a tip for a ground engaging machine implement showing our new design;
FIG. **2** is a front view thereof;
FIG. **3** is a front view thereof with the front elevated;
FIG. **4** is a left side view thereof;
FIG. **5** is a rear view thereof;
FIG. **6** is a right side view thereof;
FIG. **7** is a top view thereof;
FIG. **8** is a bottom view thereof; and,
FIG. **9** is a rear left perspective view thereof.
The broken lines depicted in the foregoing figures are for purposes of illustration only, and form no part of the claimed design.

1 Claim, 5 Drawing Sheets

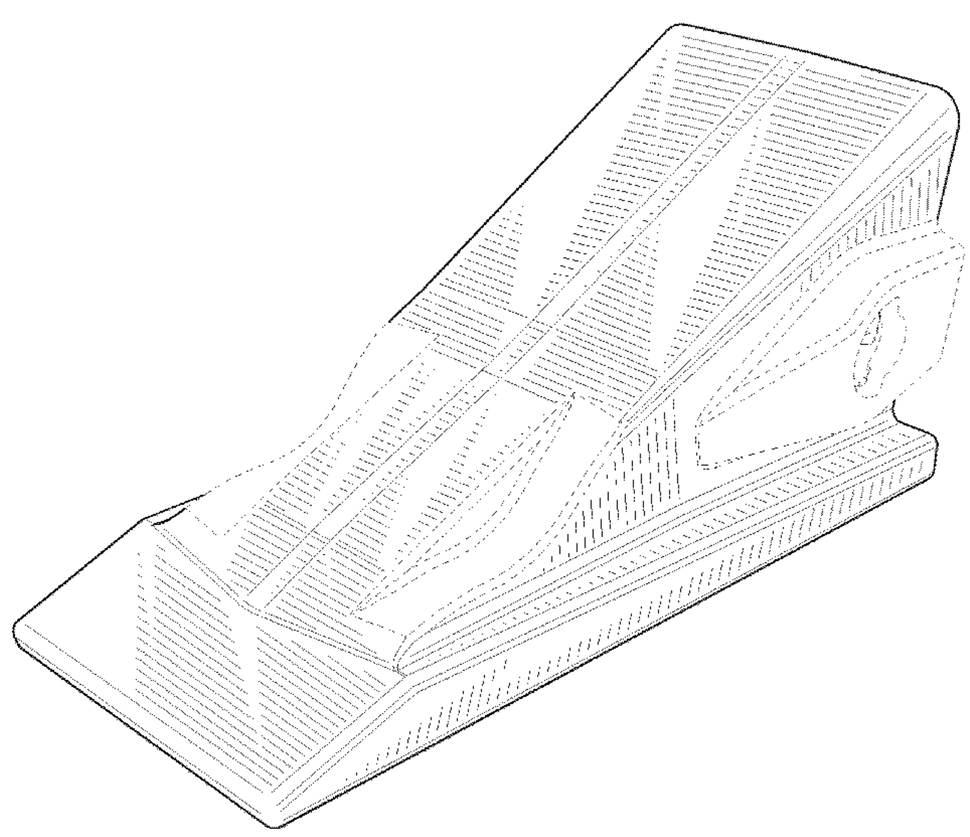

(56) **References Cited**

U.S. PATENT DOCUMENTS

D385,286	S	*	10/1997	Moreno	D15/29
5,709,043	A	*	1/1998	Jones et al.	37/458
D392,292	S	*	3/1998	Moreno	D15/29
D395,661	S	*	6/1998	Moreno	D15/29
D408,422	S	*	4/1999	Moreno	D15/29
D410,657	S	*	6/1999	Launder et al.	D15/29
D413,338	S	*	8/1999	Pueyo Molina	D15/29
D414,193	S	*	9/1999	Launder et al.	D15/29
D415,173	S	*	10/1999	Zaun	D15/29
D417,877	S	*	12/1999	Launder et al.	D15/29
D429,256	S	*	8/2000	Zaun	D15/29
D429,258	S	*	8/2000	Zaun	D15/29
6,321,471	B2	*	11/2001	Fernandez Munoz et al.	37/456
D454,891	S	*	3/2002	Ketting et al.	D15/29
D460,464	S	*	7/2002	Ketting et al.	D15/29
D461,198	S	*	8/2002	Ketting et al.	D15/29
D461,832	S	*	8/2002	Ketting et al.	D15/29
6,477,796	B1	*	11/2002	Cornelius	37/452
6,735,890	B2		5/2004	Carpenter et al.	
D499,749	S	*	12/2004	Launder et al.	D15/29
D505,137	S	*	5/2005	Steinlage et al.	D15/29
D512,078	S	*	11/2005	Poutre	D15/29
D527,029	S	*	8/2006	Launder et al.	D15/29
7,100,315	B2		9/2006	Carpenter et al.	
D552,632	S	*	10/2007	De Martiis	D15/29
D560,232	S	*	1/2008	De Martiis	D15/29
7,362,144	B2		4/2008	Jones et al.	
7,367,144	B2		5/2008	Jones et al.	
D614,206	S	*	4/2010	Ruvang	D15/29
7,739,814	B2		6/2010	Carpenter et al.	
7,762,015	B2		7/2010	Smith et al.	
D624,943	S	*	10/2010	Gibbon	D15/29

OTHER PUBLICATIONS

Caterpillar, "Cat Backhoe Loader Options," published Jan. 1, 2005.
U.S. Appl. No. 13/644,518, filed Oct. 4, 2012, entitled "Implement Tooth Assembly with Tip and Adapter".
U.S. Appl. No. 29/403,592, filed Oct. 7, 2011, entitled "Tip for a Ground Engaging Machine Implement".
U.S. Appl. No. 29/403,595, filed Oct. 7, 2011, entitled "Tip for a Ground Engaging Machine Implement".
U.S. Appl. No. 29/403,600, filed Oct. 7, 2011, entitled "Tip for a Ground Engaging Machine Implement".
U.S. Appl. No. 29/403,570, filed Oct. 7, 2011, entitled "Tip for a Ground Engaging Machine Implement".

* cited by examiner

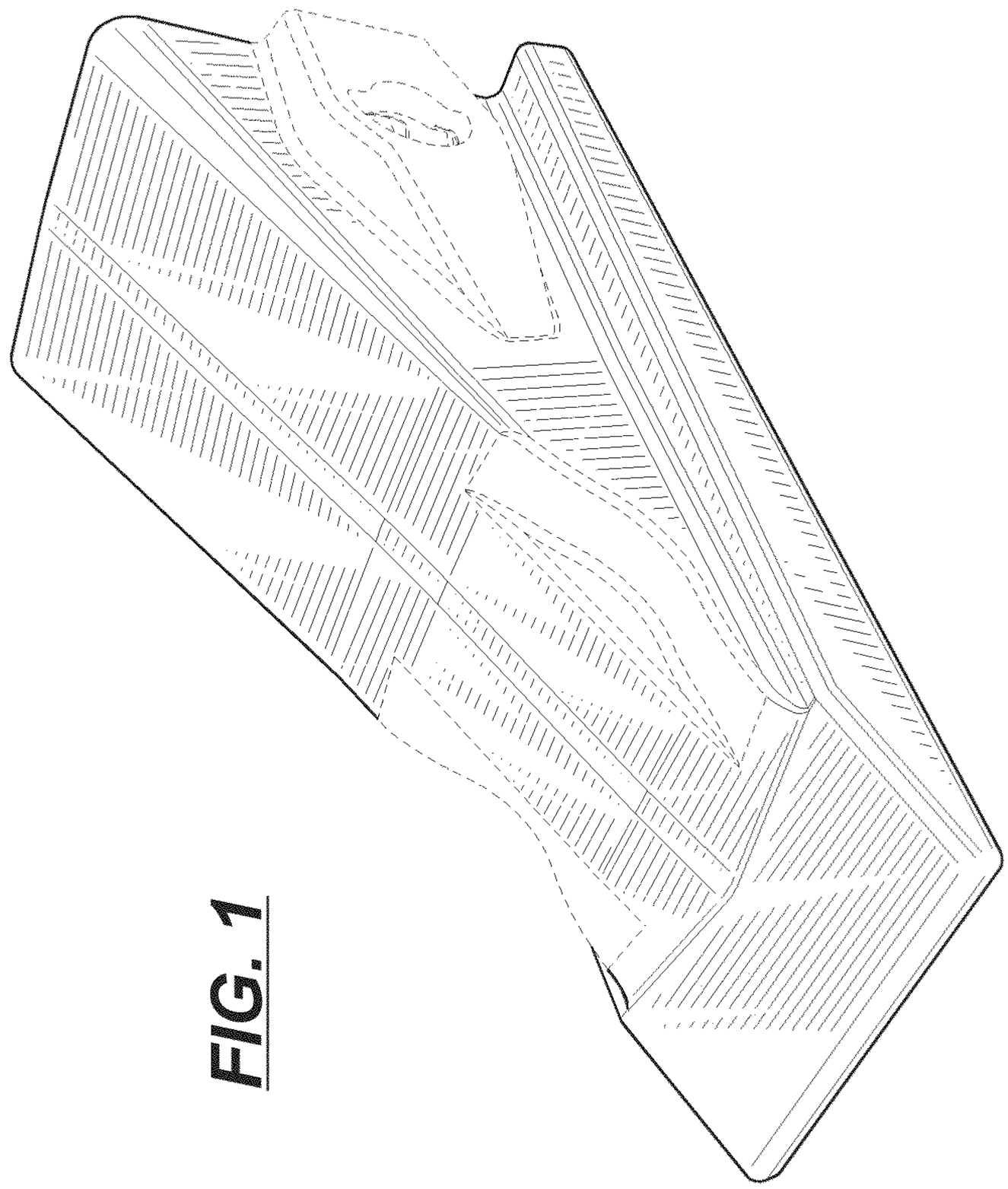

FIG. 1

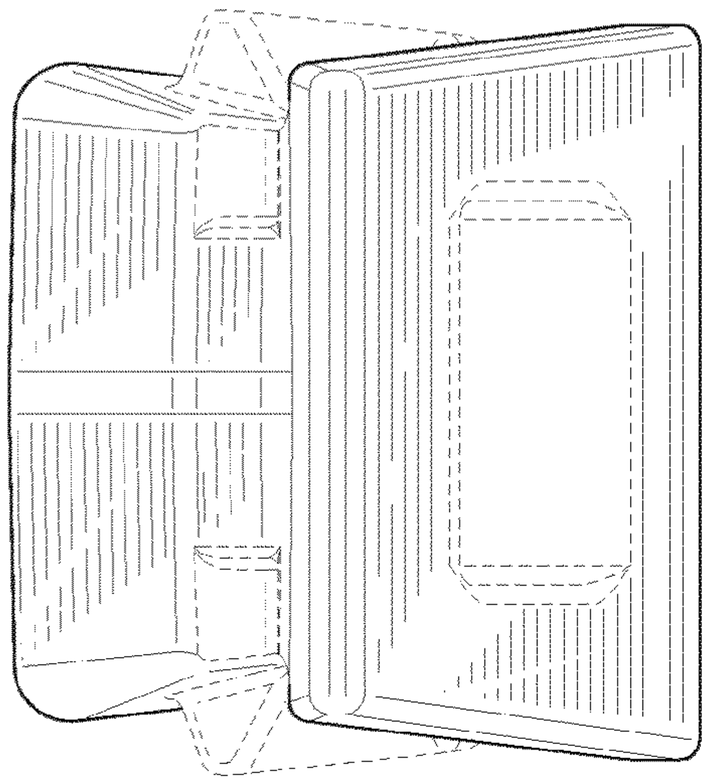

FIG. 3

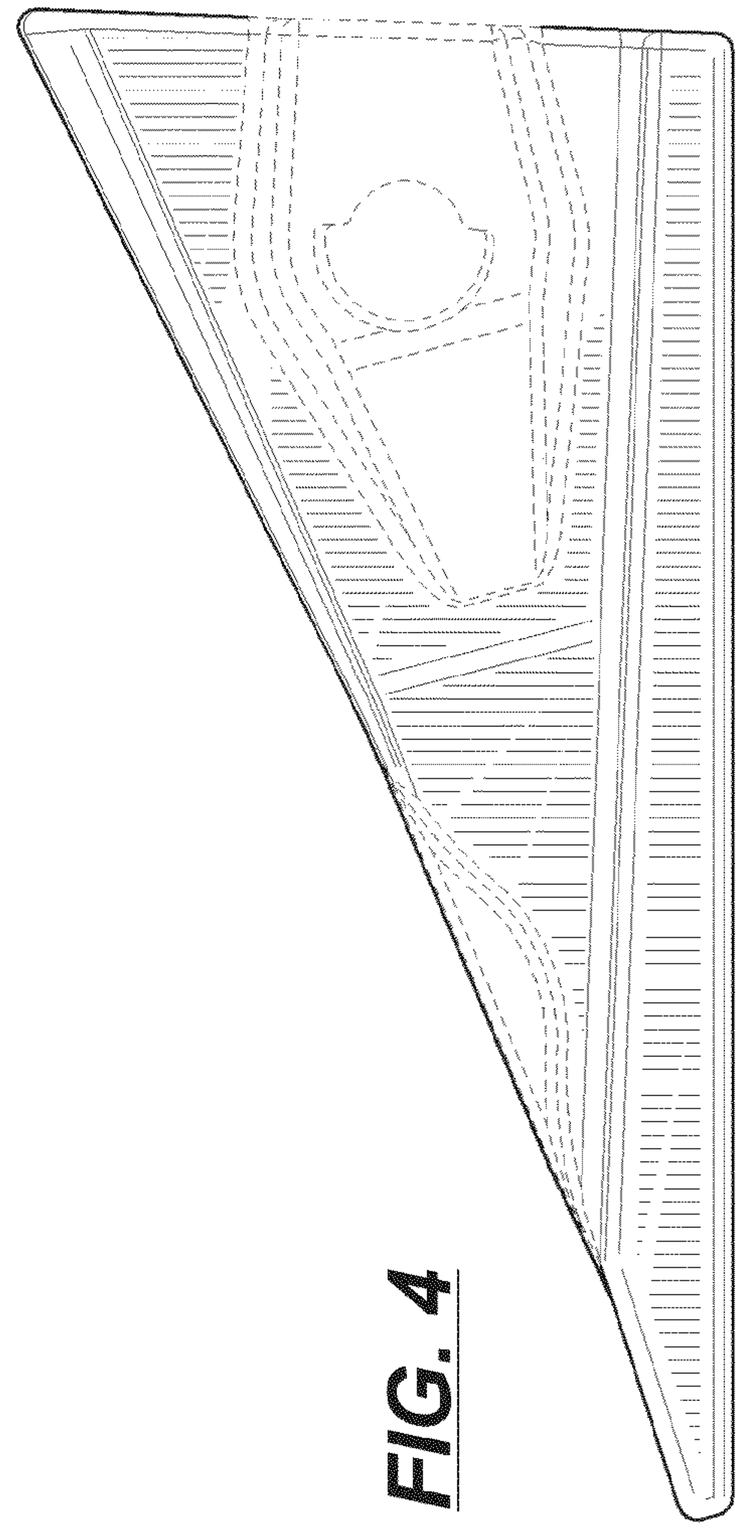

FIG. 4

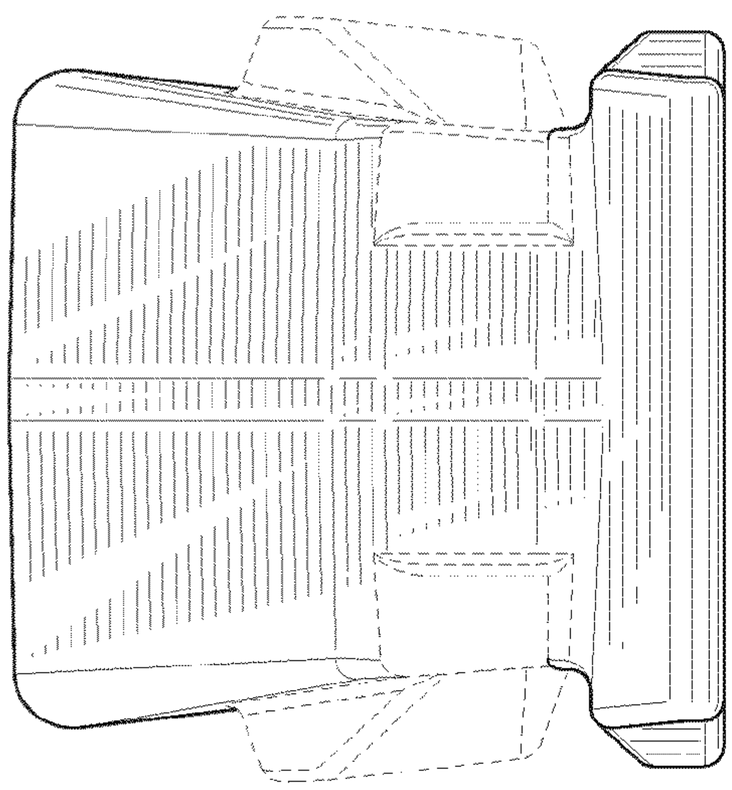

FIG. 2

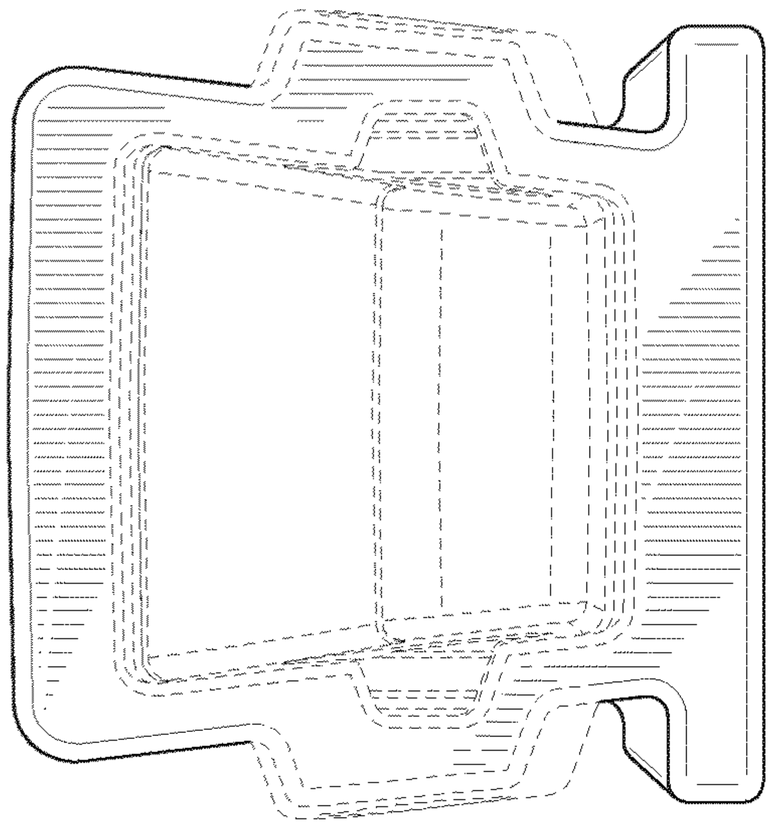

FIG. 5

FIG. 6

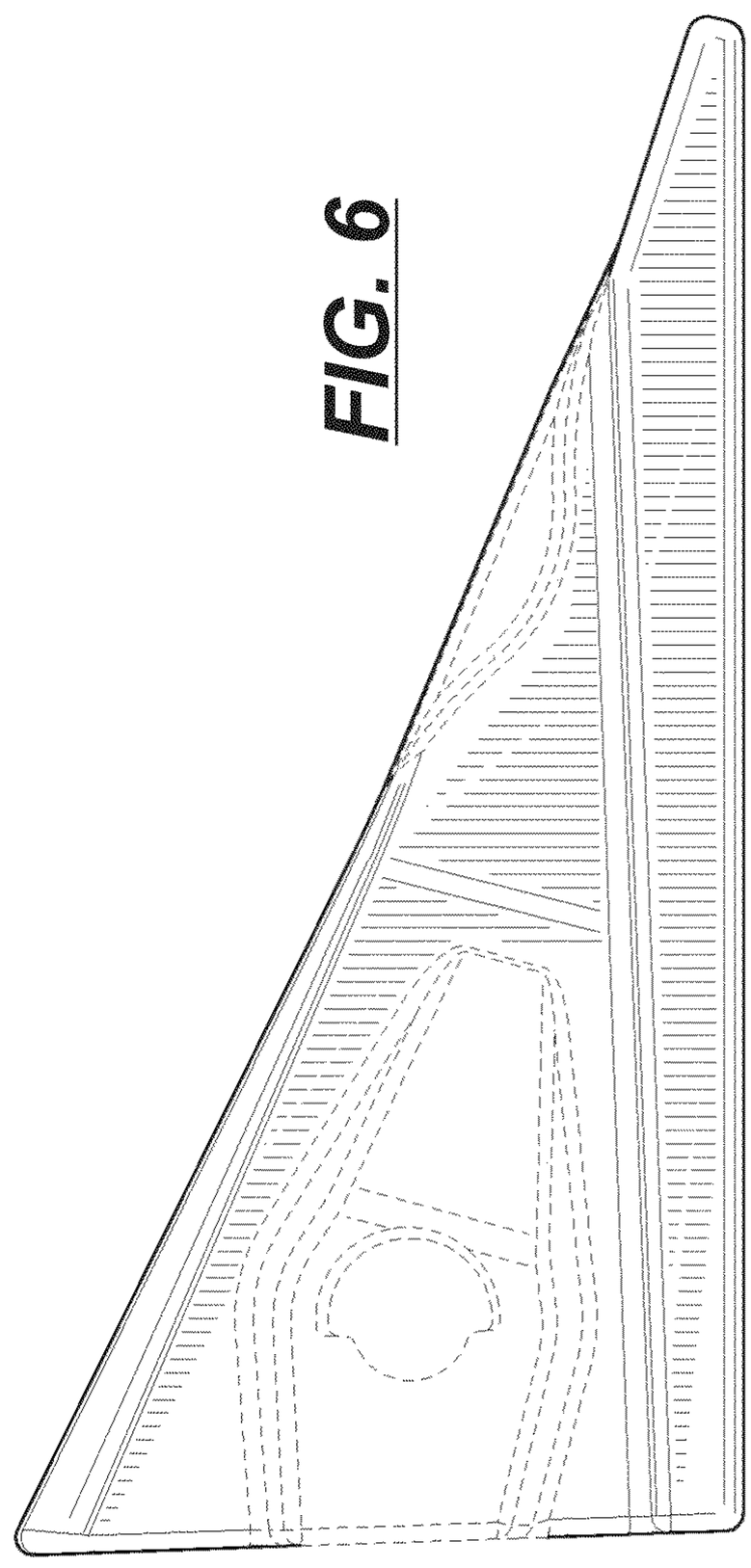

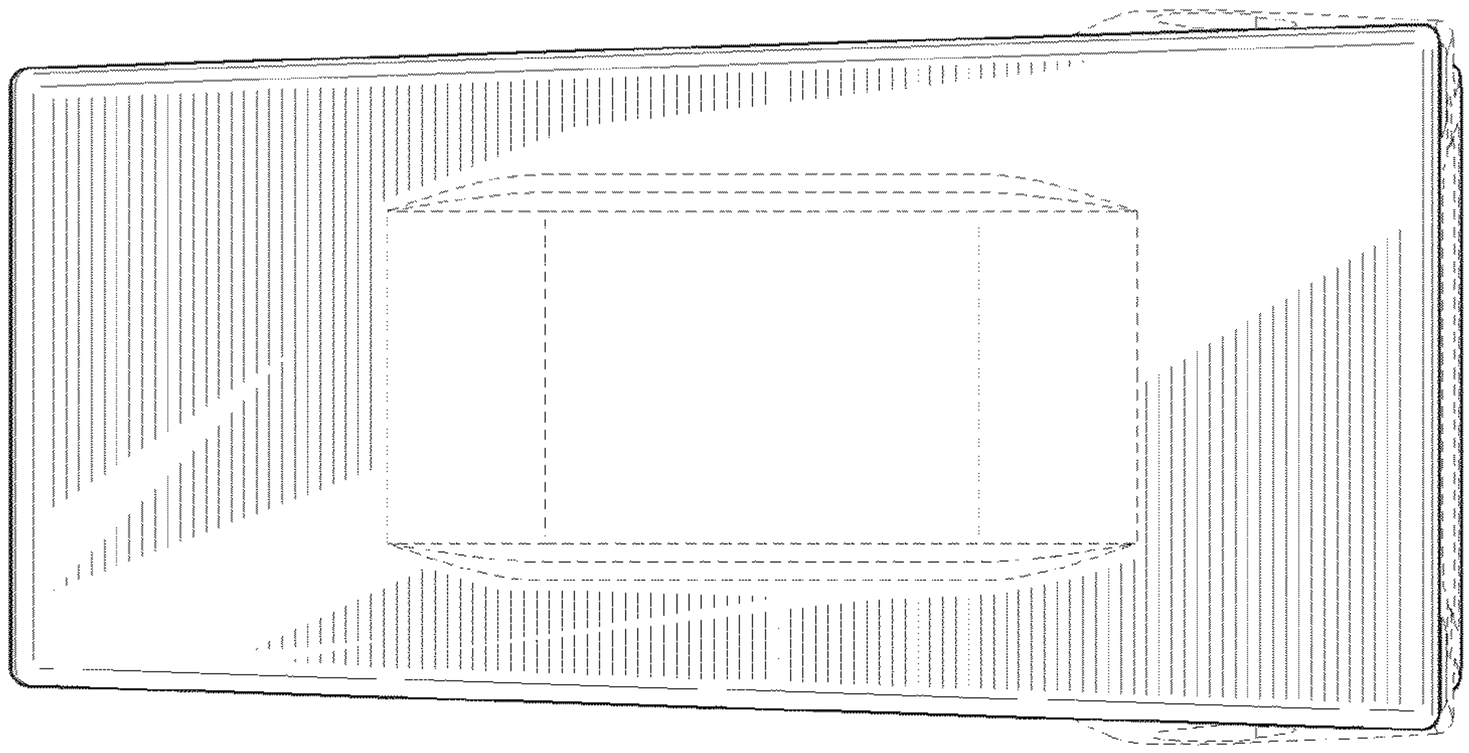

FIG. 8

FIG. 7

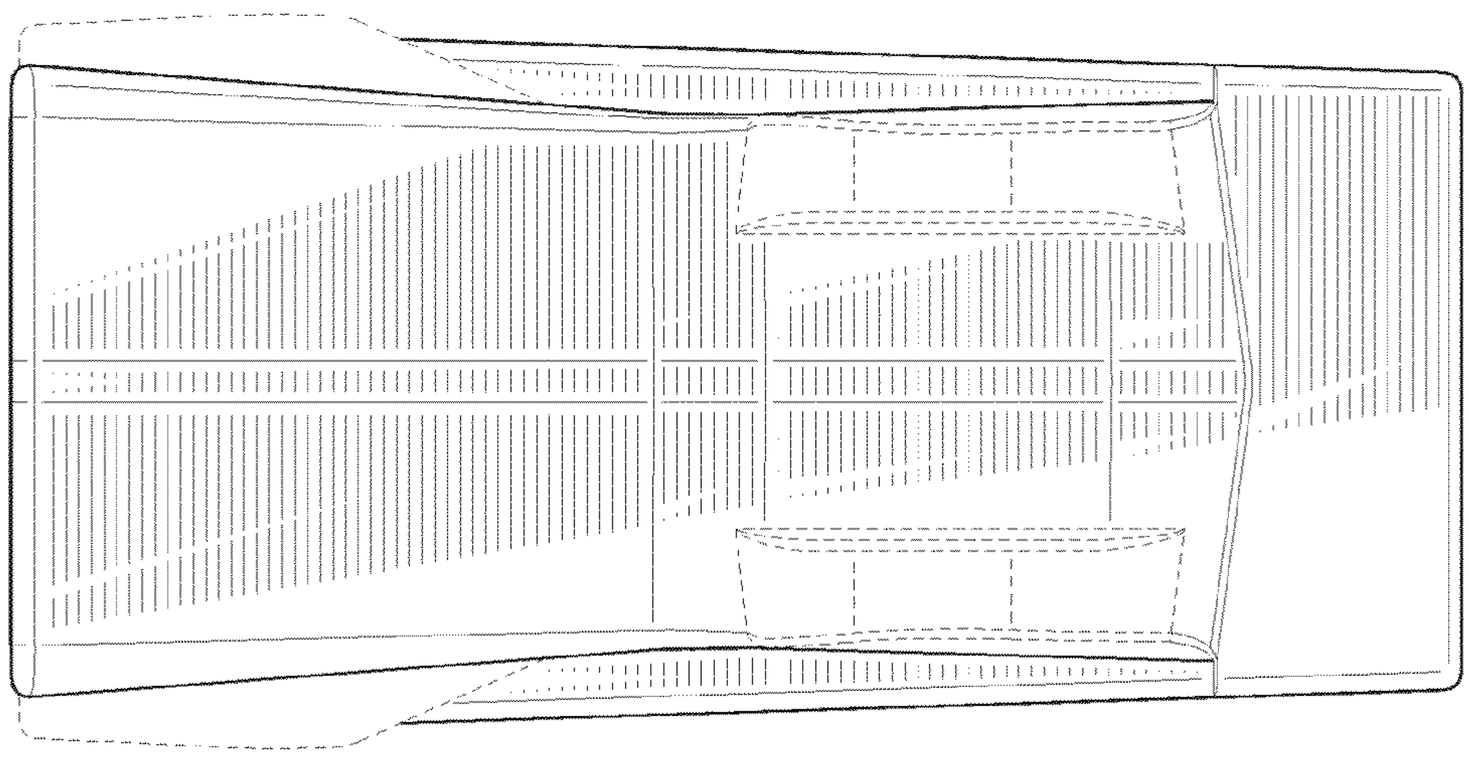

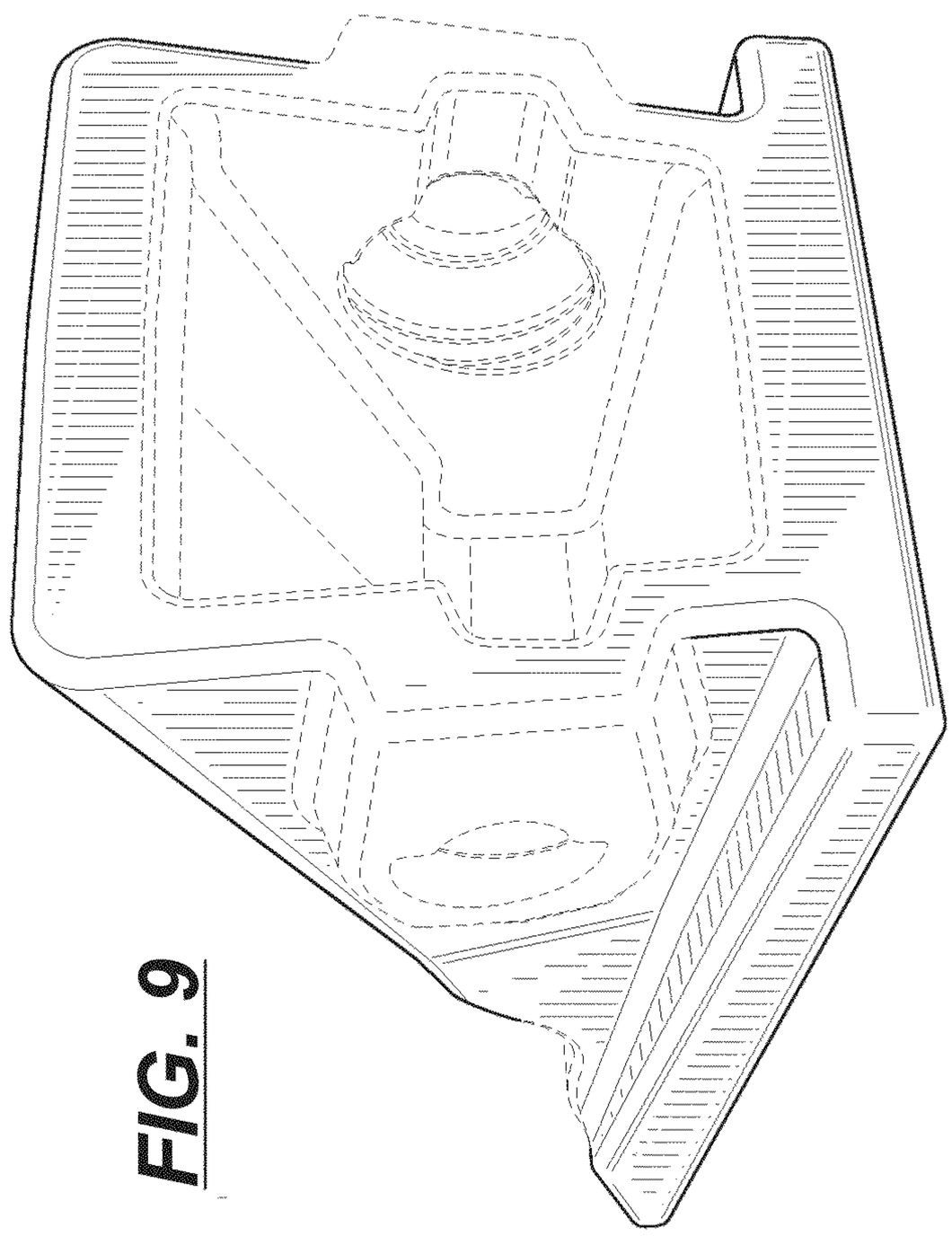

FIG. 9