US00D706759S

(12) United States Design Patent

Myung et al.

(10) Patent No.: US D706,759 S
(45) Date of Patent: ** Jun. 10, 2014

(54) **NOTEBOOK COMPUTER**

(71) Applicant: **Samsung Electronics Co., Ltd.**, Suwon-si (KR)

(72) Inventors: **Ji-Eun Myung**, Seoul (KR); **Jung-Hwan Hong**, Seoul (KR)

(73) Assignee: **Samsung Electronics Co., Ltd.**, Suwon-si (KR)

(**) Term: **14 Years**

(21) Appl. No.: **29/440,875**

(22) Filed: **Dec. 28, 2012**

(30) **Foreign Application Priority Data**

Jul. 6, 2012 (KR) 30-2012-0033107

(51) **LOC (10) Cl.** **14-02**

(52) **U.S. Cl.**
USPC **D14/315**

(58) **Field of Classification Search**
USPC ..... D14/315–327; D18/1, 2, 7, 11; 235/145 A, 145 R; 341/22, 23; 345/104, 345/156, 168, 169, 173; 361/679.08, 361/679.09, 679.11, 679.26, 679.27; 16/367
See application file for complete search history.

(56) **References Cited**

U.S. PATENT DOCUMENTS

D421,972	S	*	3/2000	Makidera et al.	D14/316
D556,192	S	*	11/2007	Jeong et al.	D14/327
D596,633	S	*	7/2009	Kawase et al.	D14/319
D631,472	S	*	1/2011	Kawase et al.	D14/327
D631,879	S	*	2/2011	Kawase	D14/327
7,894,184	B2	*	2/2011	Huang et al.	361/679.48
2005/0041378	A1	*	2/2005	Hamada et al.	361/680
2006/0227498	A1	*	10/2006	Tanaka et al.	361/681

* cited by examiner

Primary Examiner — Freda S Nunn
(74) *Attorney, Agent, or Firm* — NSIP Law

(57) **CLAIM**

The ornamental design for a notebook computer, as shown and described.

DESCRIPTION

FIG. **1** is a top perspective view of a notebook computer;
FIG. **2** is a front view of the notebook computer of FIG. **1**;
FIG. **3** is a rear view of the notebook computer of FIG. **1**;
FIG. **4** is a left-side view of the notebook computer of FIG. **1**;
FIG. **5** is a right-side view of the notebook computer of FIG. **1**;
FIG. **6** is a top plan view of the notebook computer of FIG. **1**;
FIG. **7** is a bottom plan view of the notebook computer of FIG. **1**; and,
FIG. **8** is a partial view of FIG. **1** that is included to more clearly depict the design feature on the top of the bottom portion of the notebook computer, as viewed from the top perspective view (a-a', b-b', c-c', d-d') of FIG. **1**.
Features shown in broken lines in FIGS. **1**, **2**, **3**, **4**, **5**, **6**, **7**, and **8**, form no part of the claimed design.

1 Claim, 8 Drawing Sheets

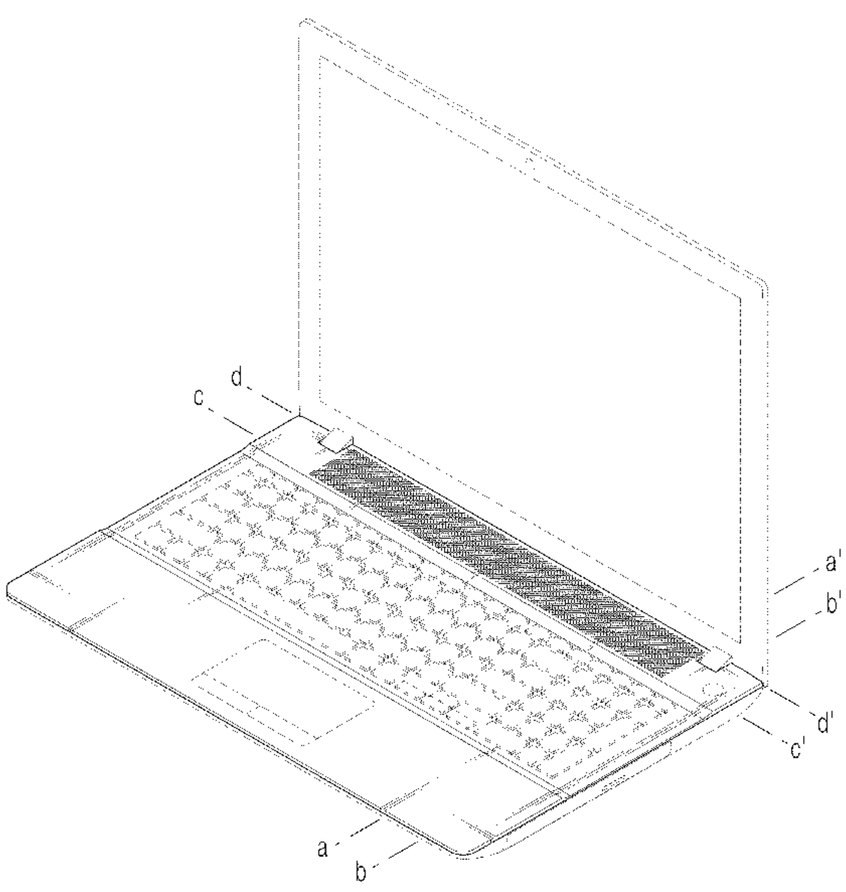

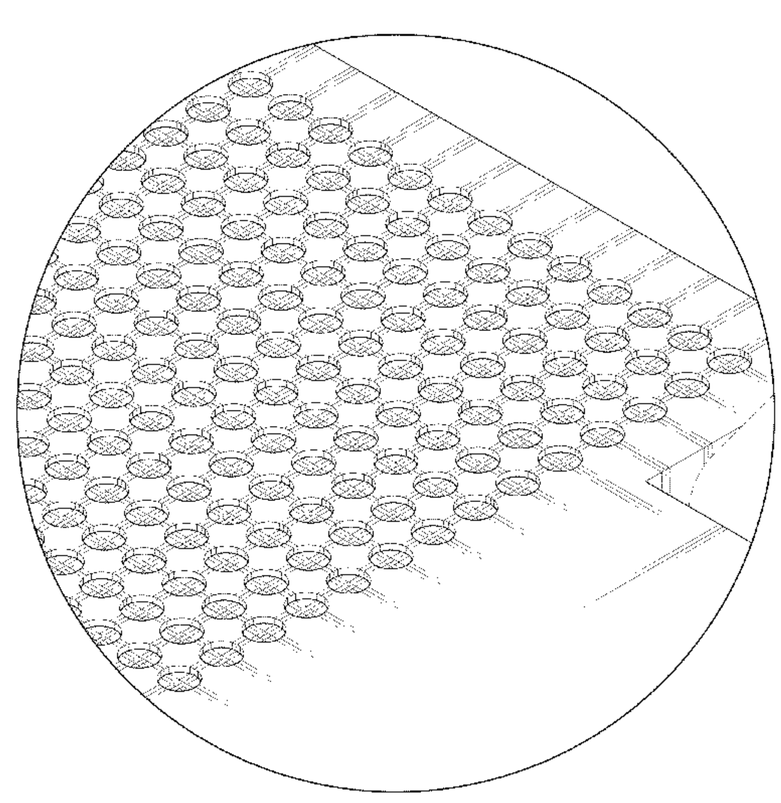

FIG.1

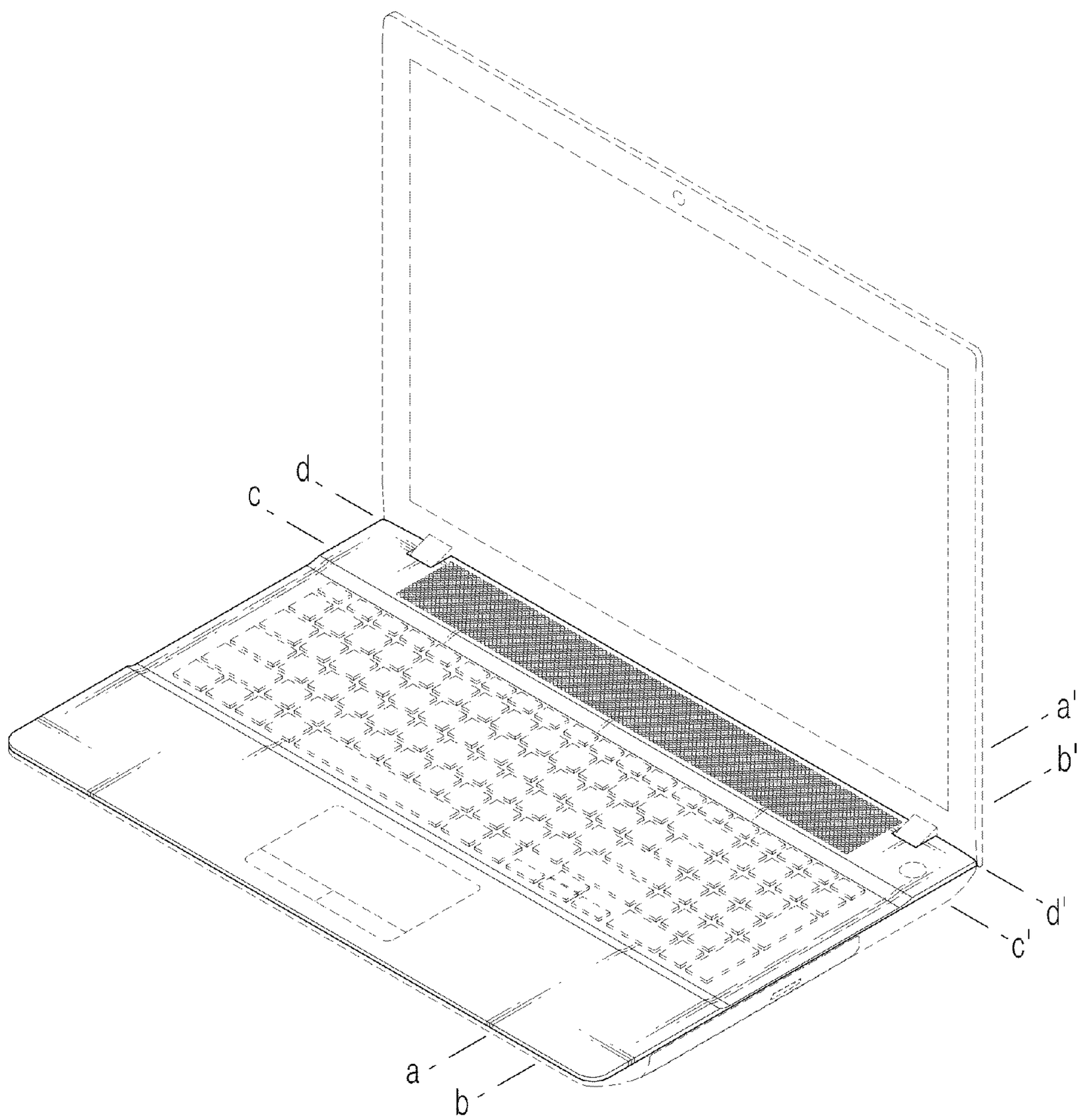

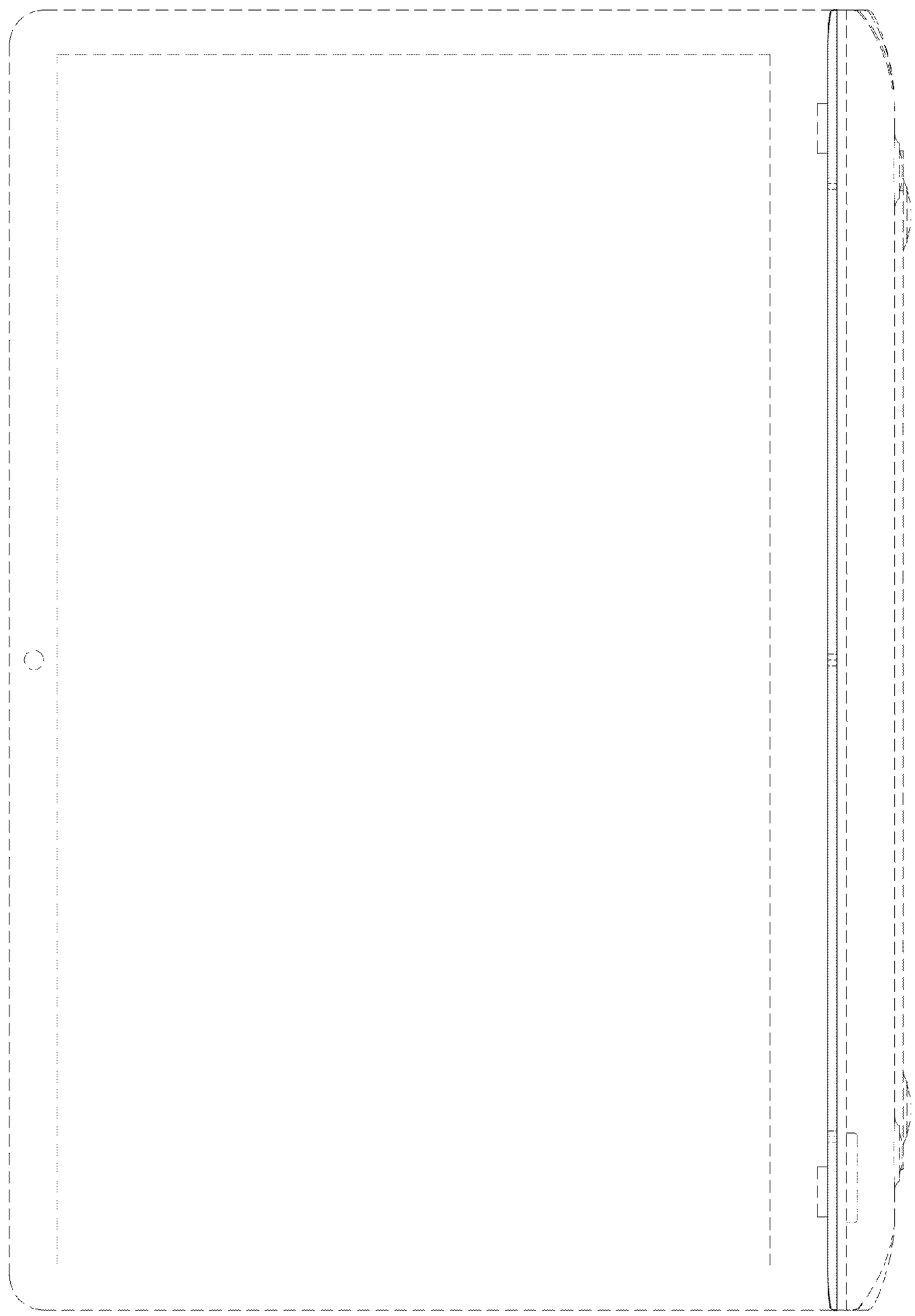

FIG.2

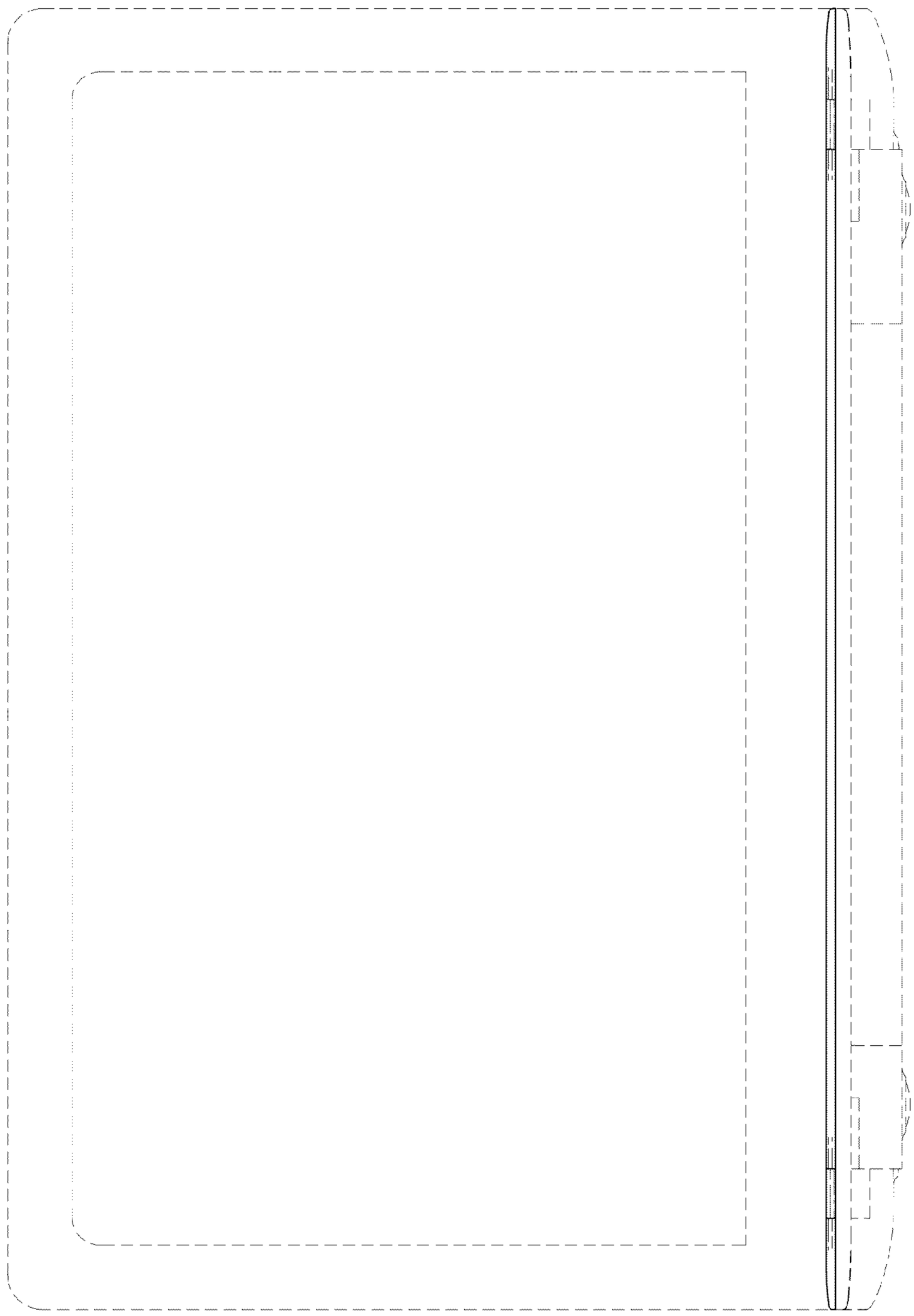

FIG.3

FIG. 4

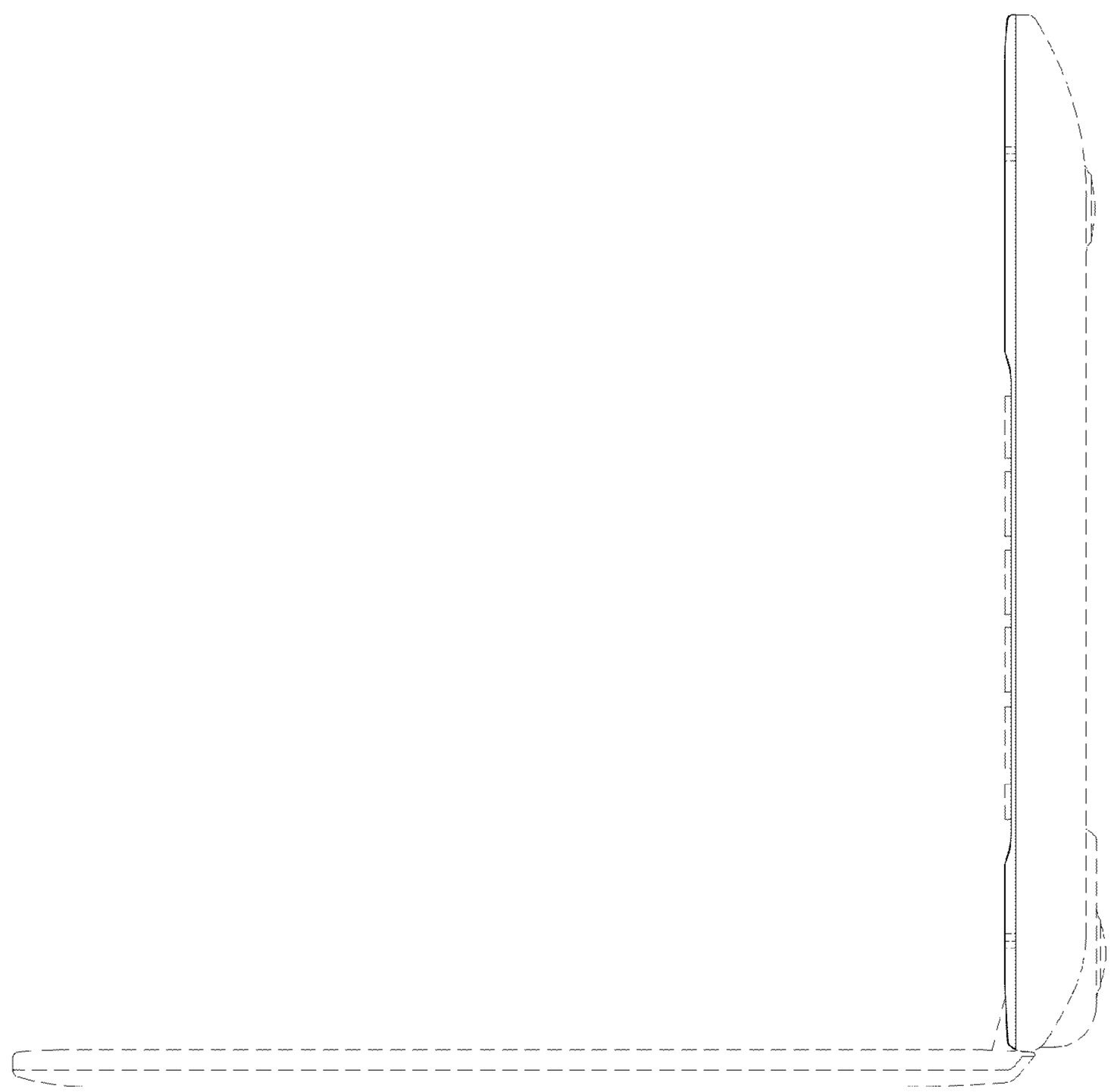

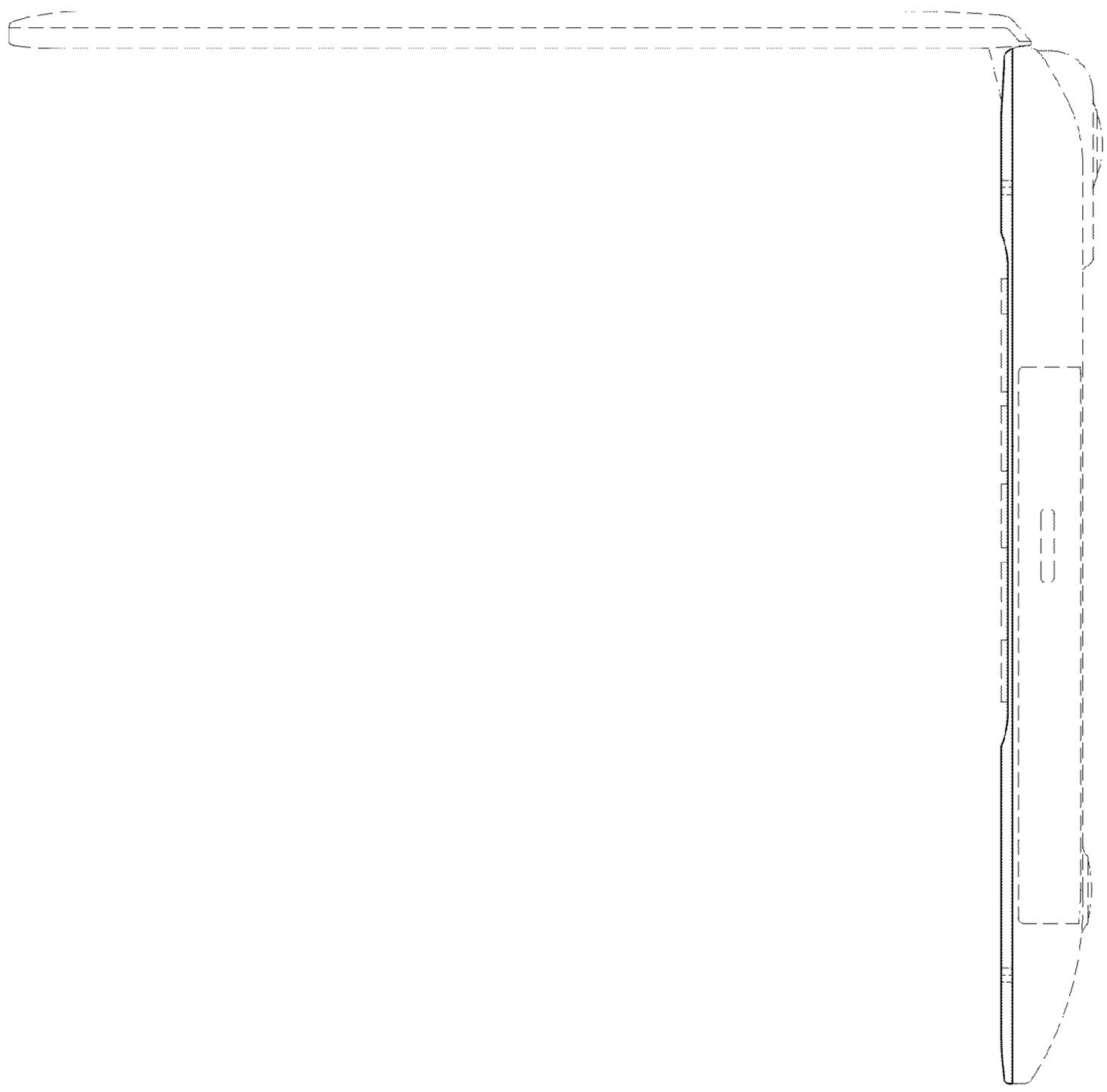

FIG.5

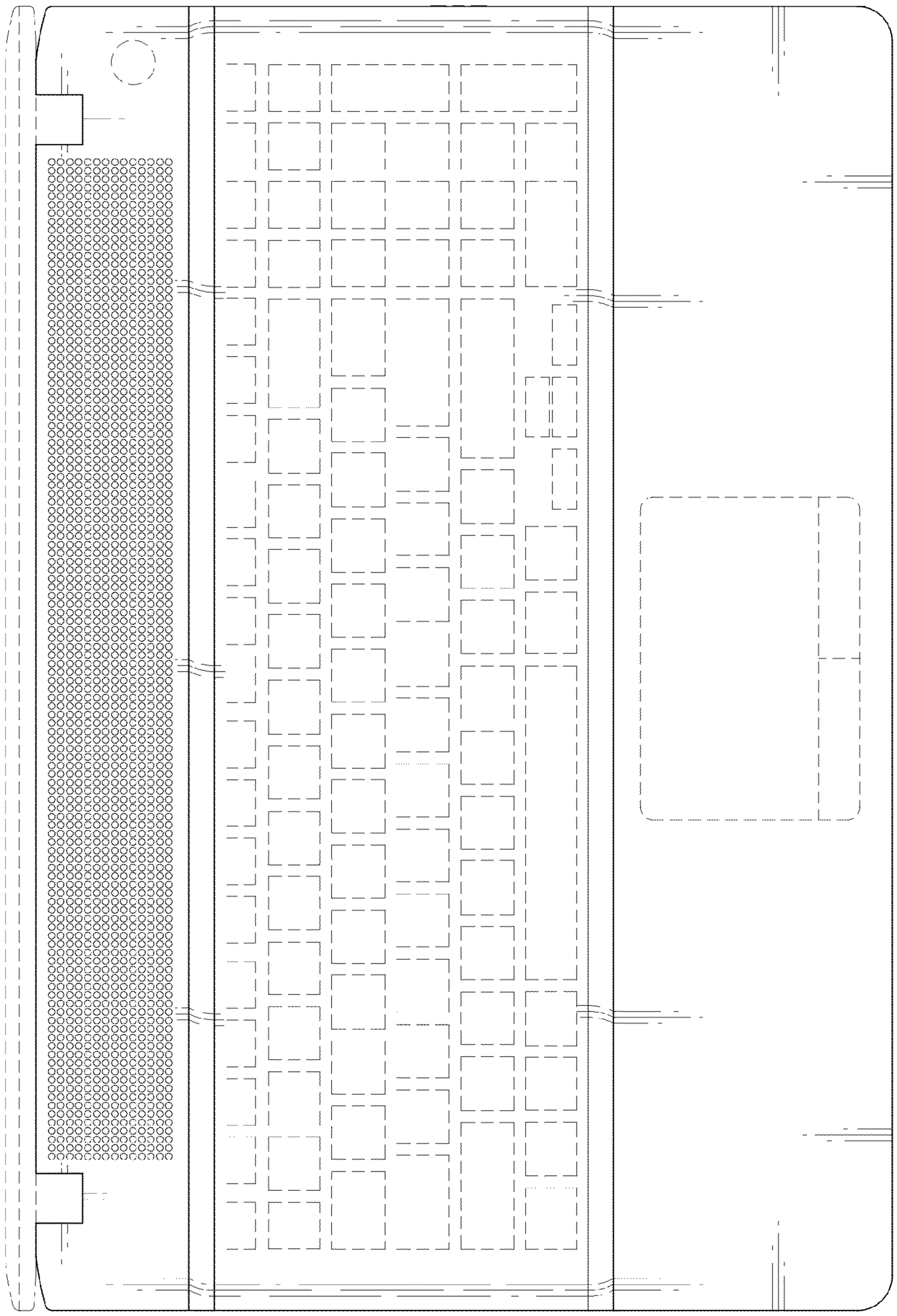

FIG.6

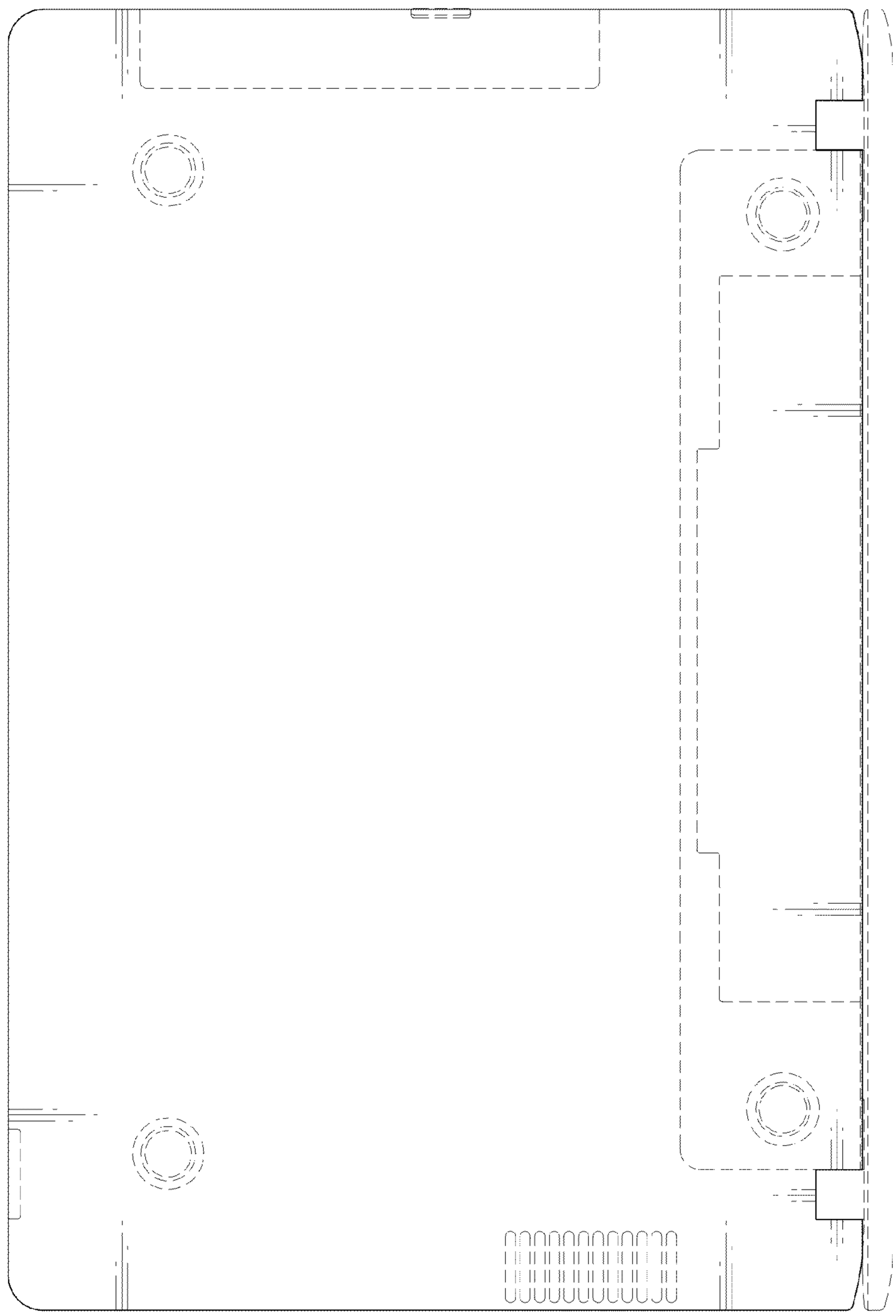

FIG. 7
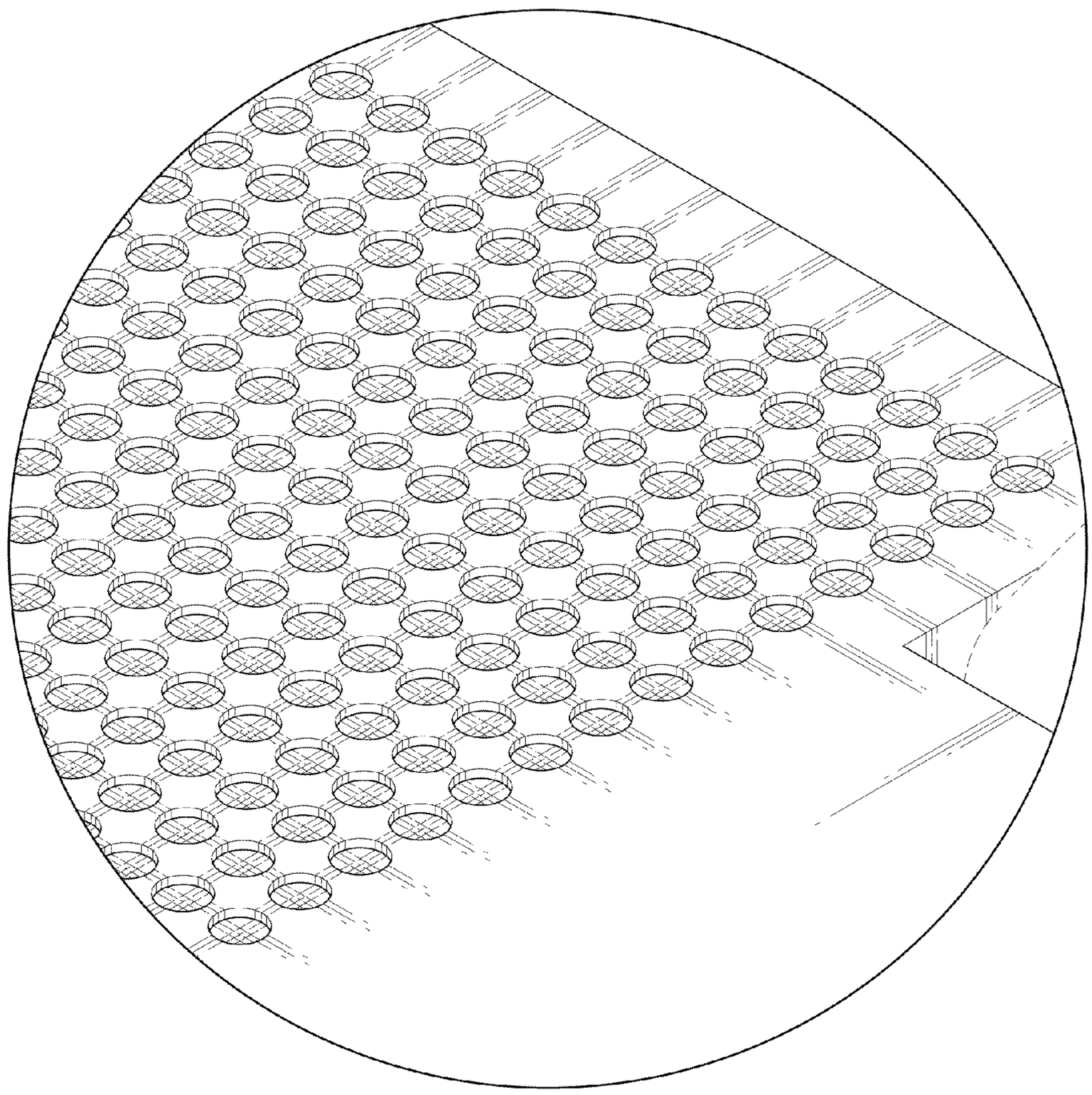
FIG.8