US00D706480S

(12) United States Design Patent

Hedstrom et al.

(10) Patent No.: US D706,480 S
(45) Date of Patent: ** Jun. 3, 2014

(54) **LIGHTING FIXTURE**

(71) Applicant: **Delta T Corporation**, Lexington, KY (US)

(72) Inventors: **Kristen K. Hedstrom**, Lexington, KY (US); **Terry M. Birchler**, Blacklick, OH (US); **Shawn Whetstone**, New Albany, OH (US)

(73) Assignee: **Delta T Corporation**, Lexington, KY (US)

(**) Term: **14 Years**

(21) Appl. No.: **29/464,737**

(22) Filed: **Aug. 20, 2013**

(51) **LOC (10) Cl.** **25-03**

(52) **U.S. Cl.**
USPC **D26/76**; D26/119

(58) **Field of Classification Search**
USPC D26/72, 75–78, 118, 119, 120, 122; 362/147, 217.01–217.12, 218, 362/221–225, 345
See application file for complete search history.

(56) **References Cited**

U.S. PATENT DOCUMENTS

D149,427	S	*	4/1948	Lindahl	D26/77
D149,655	S	*	5/1948	Lindahl	D26/77
D151,575	S	*	10/1948	Winkler et al.	D26/77
D151,576	S	*	10/1948	Winkler et al.	D26/77
D151,577	S	*	10/1948	Winkler et al.	D26/77
D180,533	S	*	6/1957	Stevens et al.	D26/76
D186,952	S	*	12/1959	Akely et al.	D26/76
D188,436	S	*	7/1960	Budke et al.	D26/77
D198,183	S	*	5/1964	Akely	D26/71
D208,572	S	*	9/1967	Wakefield	D26/76

(Continued)

Primary Examiner — Clare E Heflin

(74) *Attorney, Agent, or Firm* — King & Schickli, PLLC

(57) **CLAIM**

The ornamental design for a lighting fixture, as shown and described.

DESCRIPTION

FIG. **1** is a bottom perspective view of a first embodiment the lighting fixture;
FIG. **2** is a top perspective view of the first embodiment of the lighting fixture;
FIG. **3** is a right side view of the first embodiment of the lighting fixture;
FIG. **4** is a front view of the first embodiment of the lighting fixture;
FIG. **5** is a left side view of the first embodiment of the lighting fixture;
FIG. **6** is a rear view of the first embodiment of the lighting fixture;
FIG. **7** is a top view of the first embodiment of the lighting fixture; and
FIG. **8** is a bottom view of the first embodiment of the lighting fixture.
FIG. **9** is a bottom perspective view of a second embodiment of the lighting fixture;
FIG. **10** is a top perspective view of the second embodiment of the lighting fixture;
FIG. **11** is a right side view of the second embodiment of the lighting fixture;
FIG. **12** is a front view of the second embodiment of the lighting fixture;
FIG. **13** is a left side view of the second embodiment of the lighting fixture;
FIG. **14** is a rear view of the second embodiment of the lighting fixture;
FIG. **15** is a bottom view of the second embodiment of the lighting fixture; and,
FIG. **16** is a top view of the second embodiment of the lighting fixture.
The broken lines shown on the drawings depict portions of the lighting fixture that form no part of the claimed design.

1 Claim, 10 Drawing Sheets

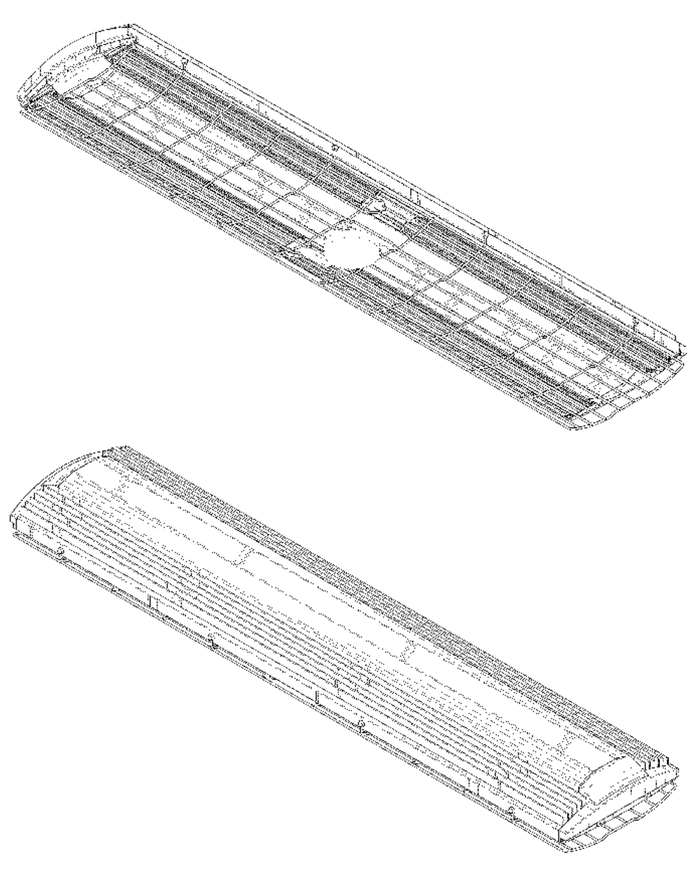

(56) **References Cited**

U.S. PATENT DOCUMENTS

D449,400	S	*	10/2001	Tillman et al.	D26/76
D491,687	S	*	6/2004	Thornton et al.	D26/76
D495,085	S	*	8/2004	Thornton et al.	D26/76
D497,025	S	*	10/2004	Waldmann	D26/78
D503,821	S	*	4/2005	Waldmann	D26/78
7,095,187	B2		8/2006	Young	
7,119,500	B2		10/2006	Young	
7,119,501	B2		10/2006	Young	
7,132,805	B2		11/2006	Young	
7,159,997	B2		1/2007	Reo et al.	
D596,778	S	*	7/2009	Yamazato	D26/76
D597,701	S	*	8/2009	Tran et al.	D26/76
7,626,345	B2		12/2009	Young	
D610,294	S	*	2/2010	Theusch	D26/76
7,810,963	B2		10/2010	Peck	
7,824,055	B2		11/2010	Sherman	
7,845,824	B2		12/2010	Robotham	
7,857,482	B2		12/2010	Reo et al.	
7,862,202	B2	*	1/2011	Laso et al.	362/217.16
D645,194	S	*	9/2011	Budike et al.	D26/76
8,063,576	B2		11/2011	Routledge	
8,066,404	B2		11/2011	Song et al.	
8,087,807	B2		1/2012	Liu et al.	
8,109,647	B2		2/2012	Soo et al.	
8,157,420	B2		4/2012	Song et al.	
D662,643	S	*	6/2012	Takahashi et al.	D26/76
8,197,086	B2	*	6/2012	Watanabe et al.	362/218
D663,882	S	*	7/2012	Muraishi et al.	D26/76
8,267,544	B2		9/2012	Zheng et al.	
8,360,613	B2	*	1/2013	Little, Jr.	362/294
8,425,085	B2		4/2013	Van Laanen et al.	
8,434,914	B2		5/2013	Li et al.	
8,474,996	B2		7/2013	Zhang et al.	
8,573,799	B2		11/2013	Lee et al.	
2006/0146531	A1		7/2006	Reo et al.	
2009/0310354	A1		12/2009	Zampini, II et al.	
2010/0315813	A1	*	12/2010	Fugerer et al.	362/235
2011/0141729	A1		6/2011	Yang et al.	
2011/0211330	A1		9/2011	Wang	
2011/0228528	A1		9/2011	Yang et al.	
2012/0014108	A1		1/2012	Greenfield et al.	
2012/0051050	A1		3/2012	Lee et al.	
2012/0087118	A1		4/2012	Bailey et al.	
2012/0162982	A1		6/2012	Wang et al.	
2012/0250309	A1		10/2012	Handsaker	
2012/0293994	A1		11/2012	McMurray	
2013/0083522	A1		4/2013	Bowers et al.	
2013/0094225	A1		4/2013	Leichner	
2013/0163245	A1		6/2013	Yang et al.	

* cited by examiner

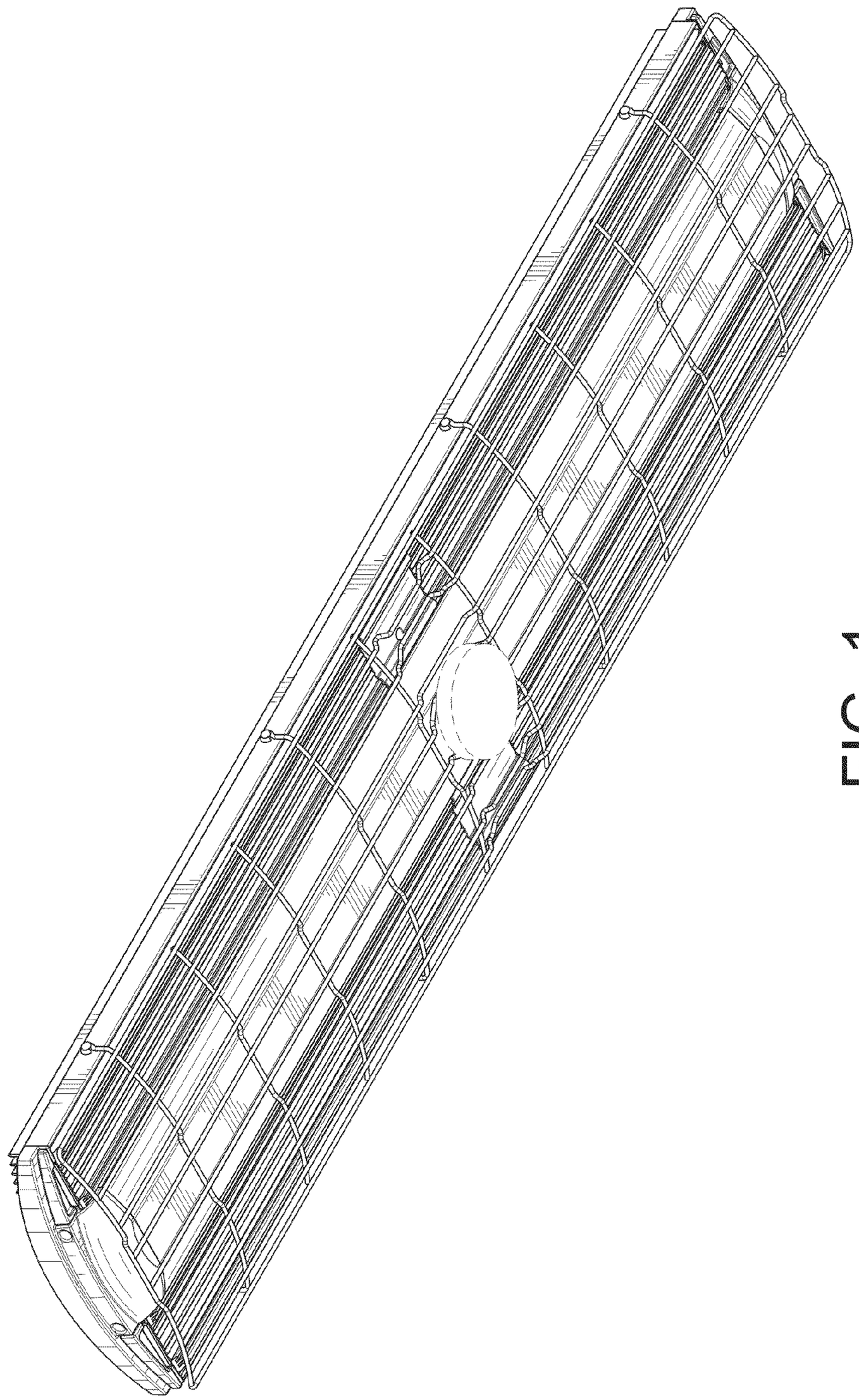

FIG. 1

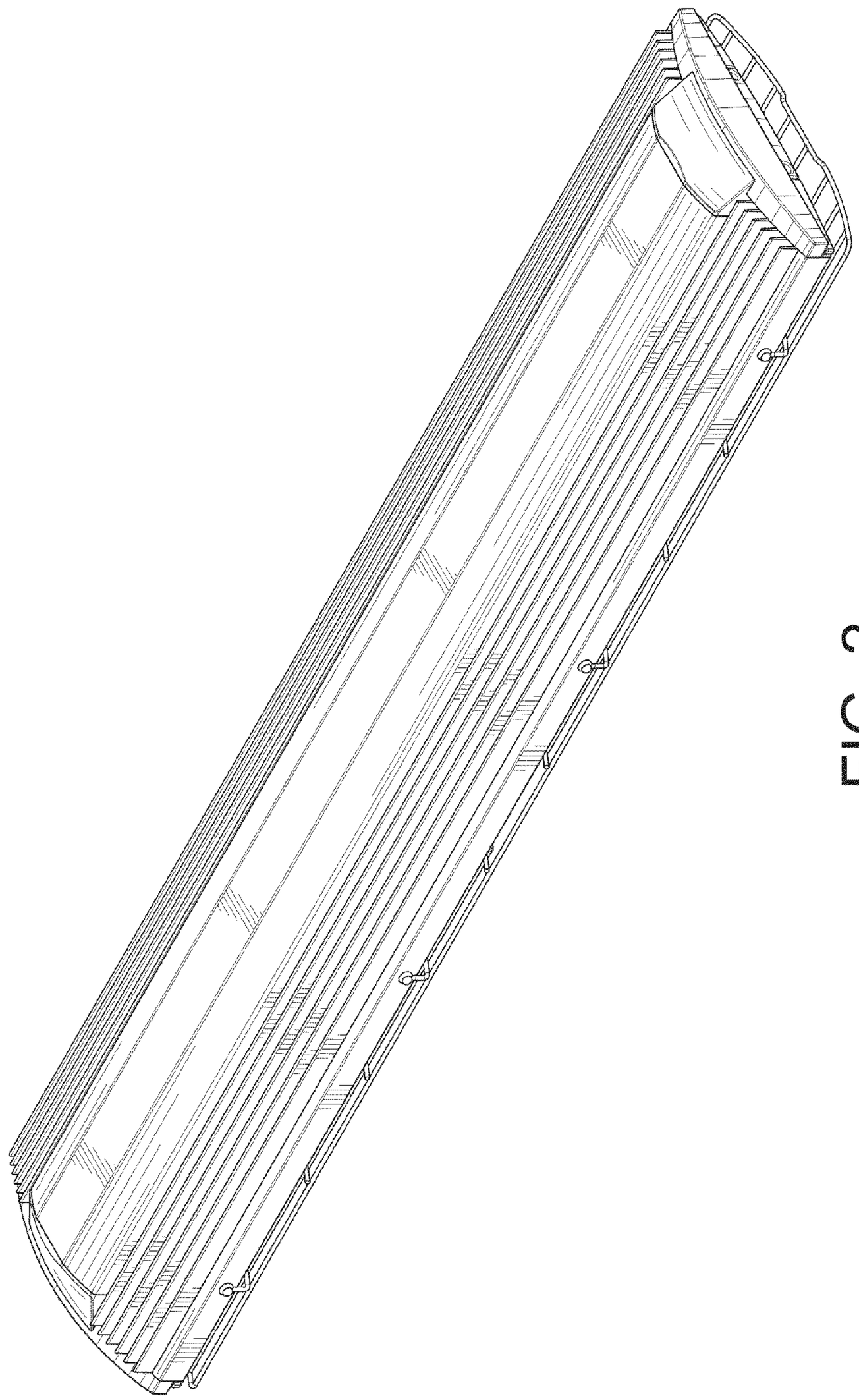

FIG. 2

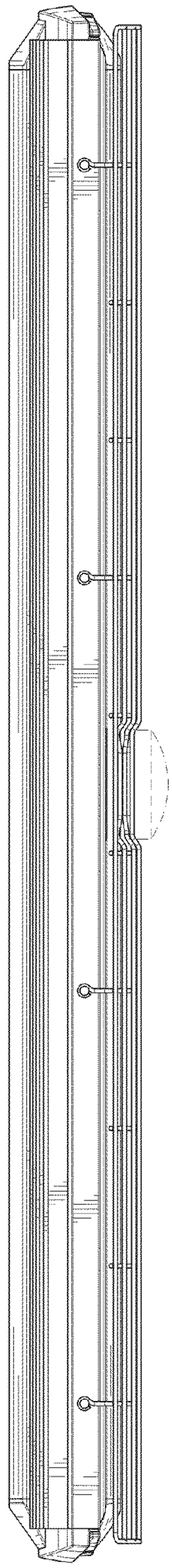

FIG. 3

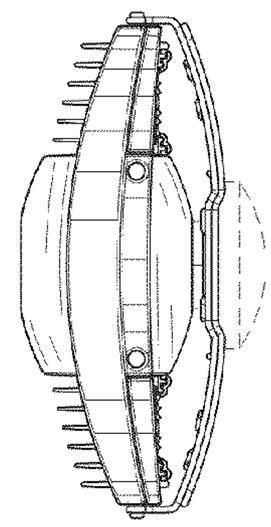

FIG. 6

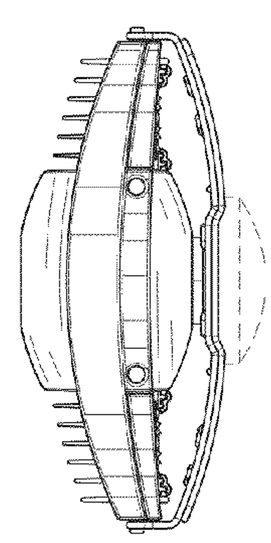

FIG. 4

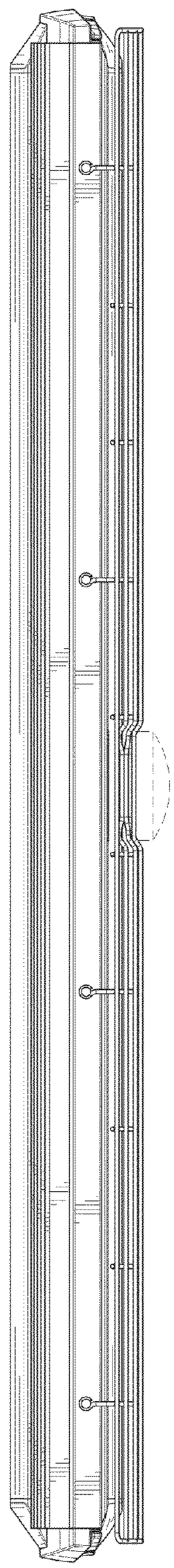

FIG. 5

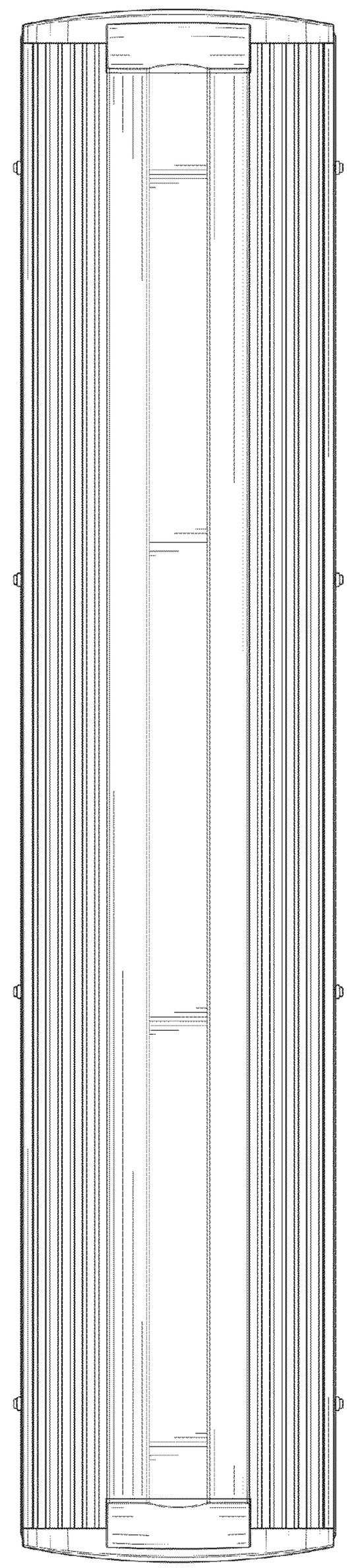

FIG. 7

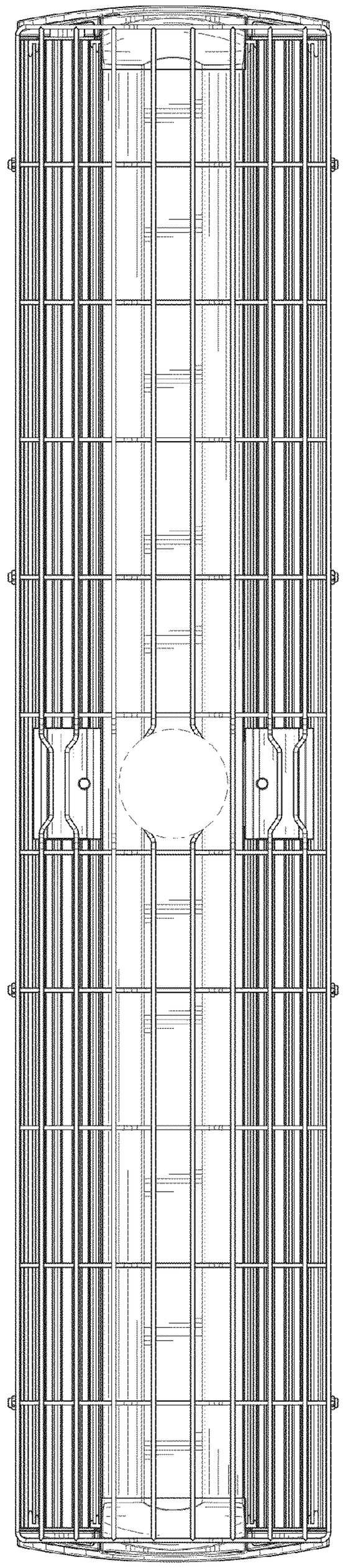

FIG. 8

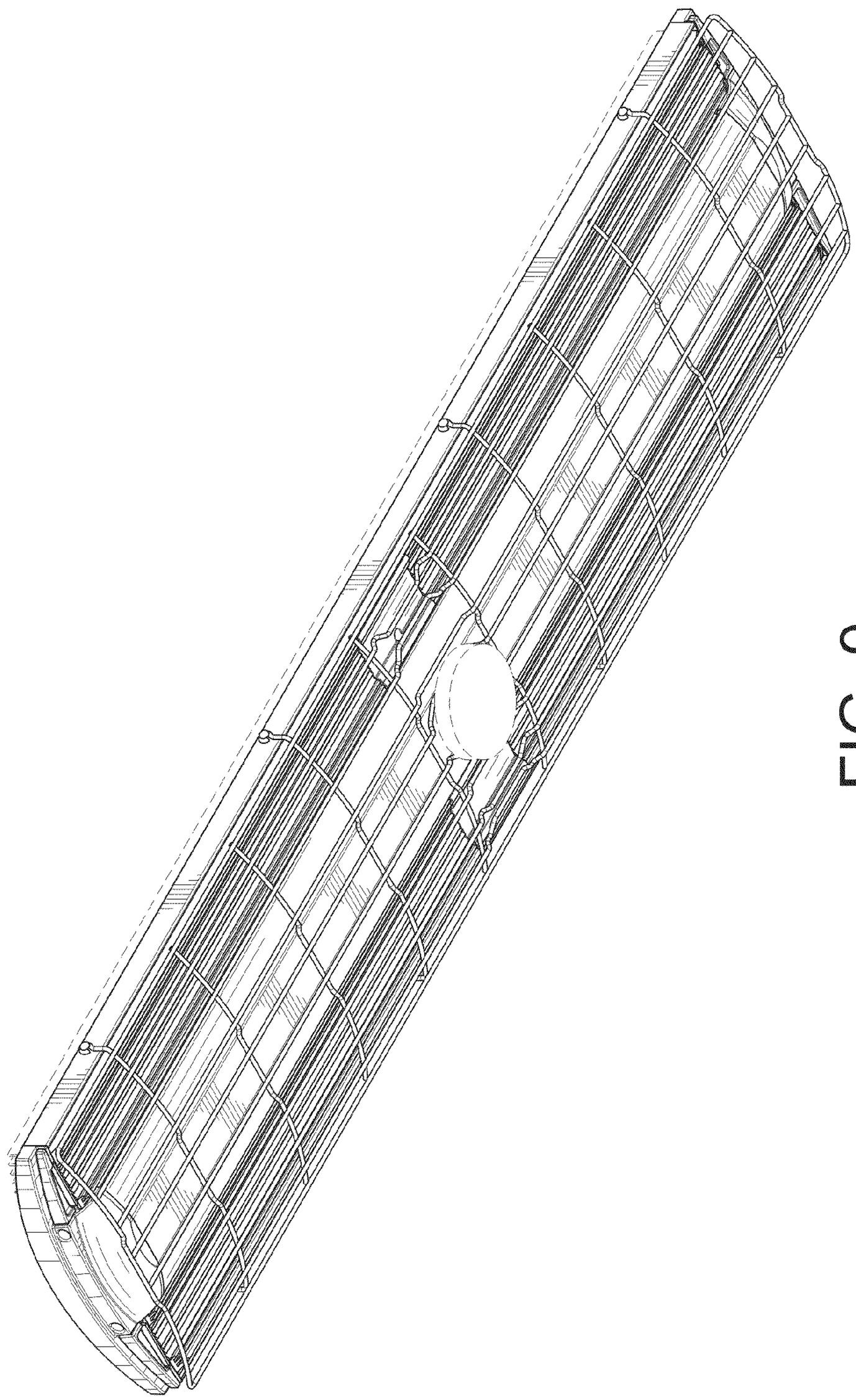

FIG. 9

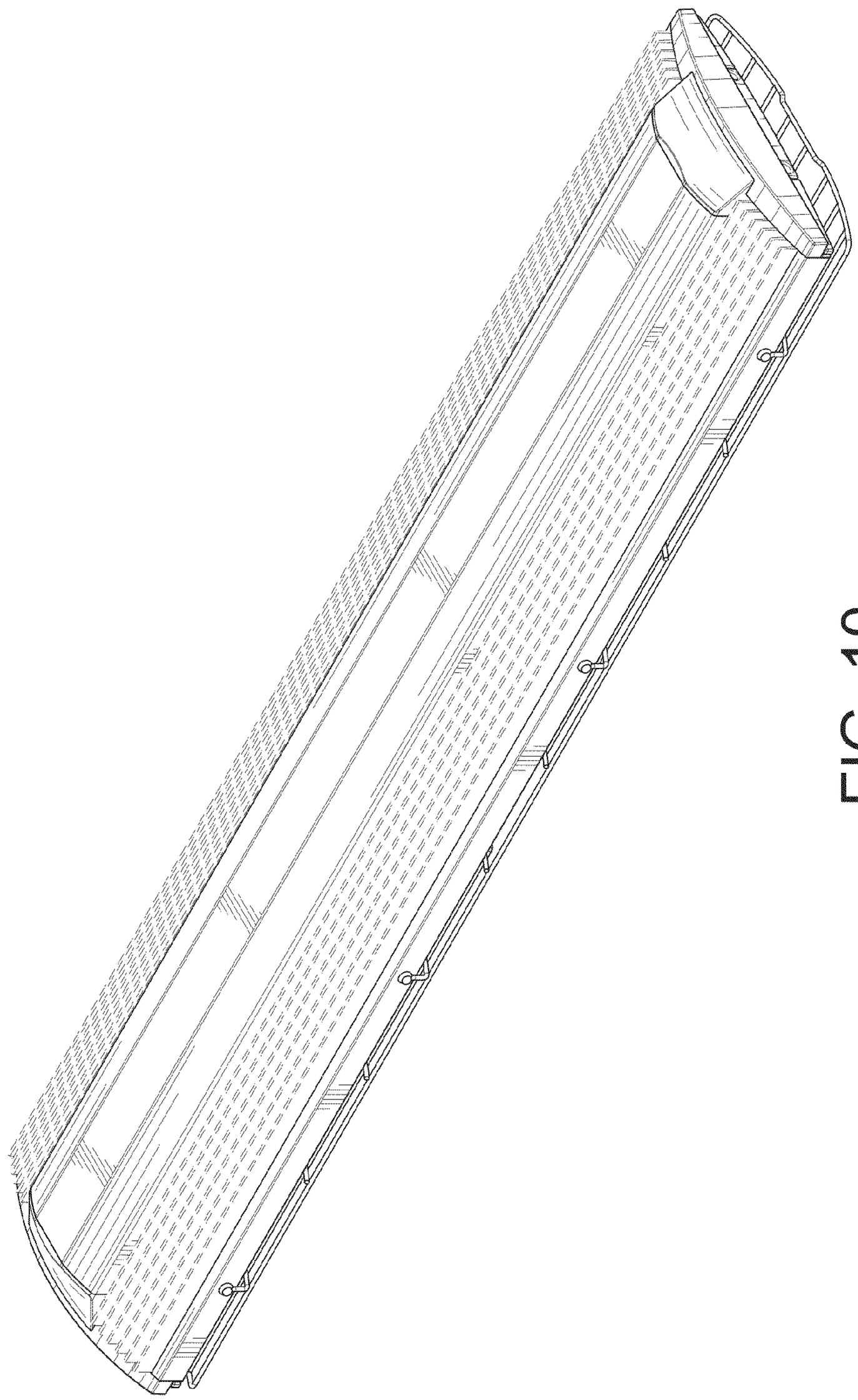

FIG. 10

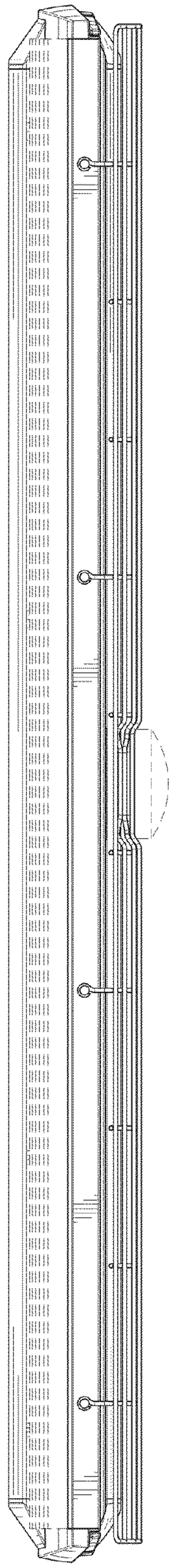

FIG. 11

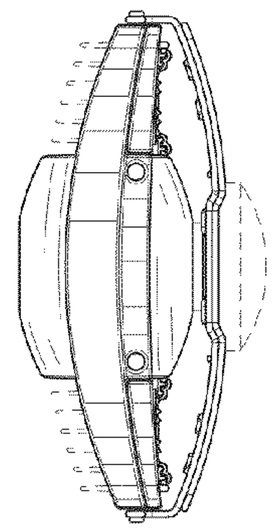

FIG. 14

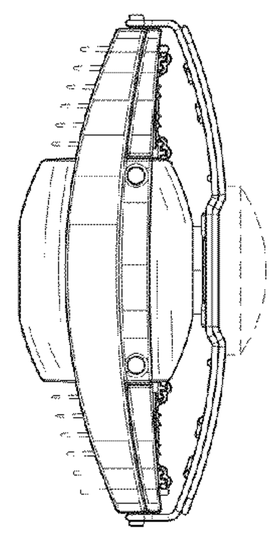

FIG. 12

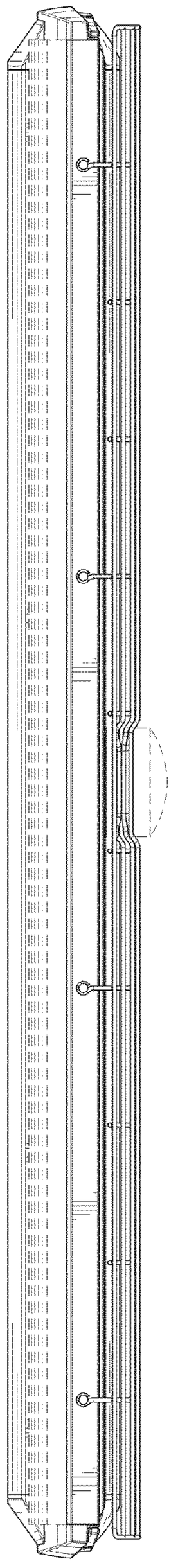

FIG. 13

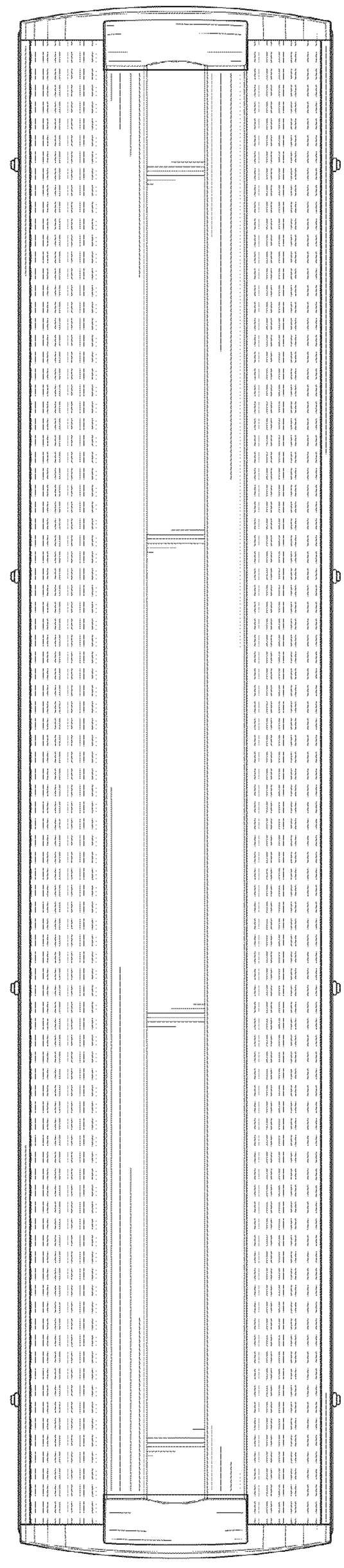

FIG. 15

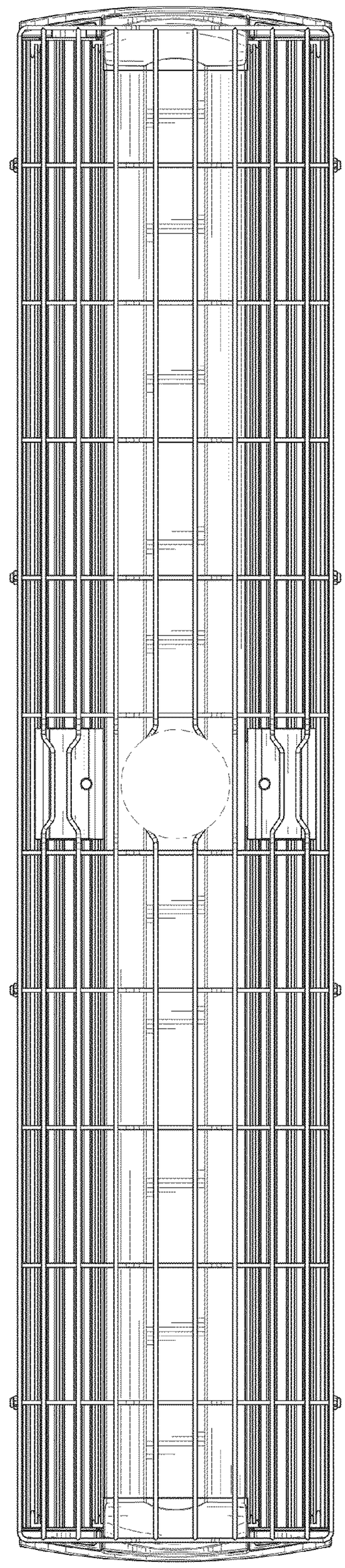

FIG. 16