US00D706480S

# (12) United States Design Patent

Hedstrom et al.

(10) Patent No.: US D706,480 S
(45) Date of Patent: ** Jun. 3, 2014

(54) **LIGHTING FIXTURE**

(71) Applicant: **Delta T Corporation**, Lexington, KY (US)

(72) Inventors: **Kristen K. Hedstrom**, Lexington, KY (US); **Terry M. Birchler**, Blacklick, OH (US); **Shawn Whetstone**, New Albany, OH (US)

(73) Assignee: **Delta T Corporation**, Lexington, KY (US)

(**) Term: **14 Years**

(21) Appl. No.: **29/464,737**

(22) Filed: **Aug. 20, 2013**

(51) **LOC (10) Cl.** ..... **25-03**

(52) **U.S. Cl.**
USPC ..... **D26/76**; D26/119

(58) **Field of Classification Search**
USPC ..... D26/72, 75–78, 118, 119, 120, 122; 362/147, 217.01–217.12, 218, 362/221–225, 345
See application file for complete search history.

(56) **References Cited**

U.S. PATENT DOCUMENTS

| | | | | | |
|---|---|---|---|---|---|
| D149,427 | S | * | 4/1948 | Lindahl | D26/77 |
| D149,655 | S | * | 5/1948 | Lindahl | D26/77 |
| D151,575 | S | * | 10/1948 | Winkler et al. | D26/77 |
| D151,576 | S | * | 10/1948 | Winkler et al. | D26/77 |
| D151,577 | S | * | 10/1948 | Winkler et al. | D26/77 |
| D180,533 | S | * | 6/1957 | Stevens et al. | D26/76 |
| D186,952 | S | * | 12/1959 | Akely et al. | D26/76 |
| D188,436 | S | * | 7/1960 | Budke et al. | D26/77 |
| D198,183 | S | * | 5/1964 | Akely | D26/71 |
| D208,572 | S | * | 9/1967 | Wakefield | D26/76 |

(Continued)

*Primary Examiner* — Clare E Heflin

(74) *Attorney, Agent, or Firm* — King & Schickli, PLLC

(57) **CLAIM**

The ornamental design for a lighting fixture, as shown and described.

**DESCRIPTION**

FIG. **1** is a bottom perspective view of a first embodiment the lighting fixture;
FIG. **2** is a top perspective view of the first embodiment of the lighting fixture;
FIG. **3** is a right side view of the first embodiment of the lighting fixture;
FIG. **4** is a front view of the first embodiment of the lighting fixture;
FIG. **5** is a left side view of the first embodiment of the lighting fixture;
FIG. **6** is a rear view of the first embodiment of the lighting fixture;
FIG. **7** is a top view of the first embodiment of the lighting fixture; and
FIG. **8** is a bottom view of the first embodiment of the lighting fixture.
FIG. **9** is a bottom perspective view of a second embodiment of the lighting fixture;
FIG. **10** is a top perspective view of the second embodiment of the lighting fixture;
FIG. **11** is a right side view of the second embodiment of the lighting fixture;
FIG. **12** is a front view of the second embodiment of the lighting fixture;
FIG. **13** is a left side view of the second embodiment of the lighting fixture;
FIG. **14** is a rear view of the second embodiment of the lighting fixture;
FIG. **15** is a bottom view of the second embodiment of the lighting fixture; and,
FIG. **16** is a top view of the second embodiment of the lighting fixture.
The broken lines shown on the drawings depict portions of the lighting fixture that form no part of the claimed design.

**1 Claim, 10 Drawing Sheets**

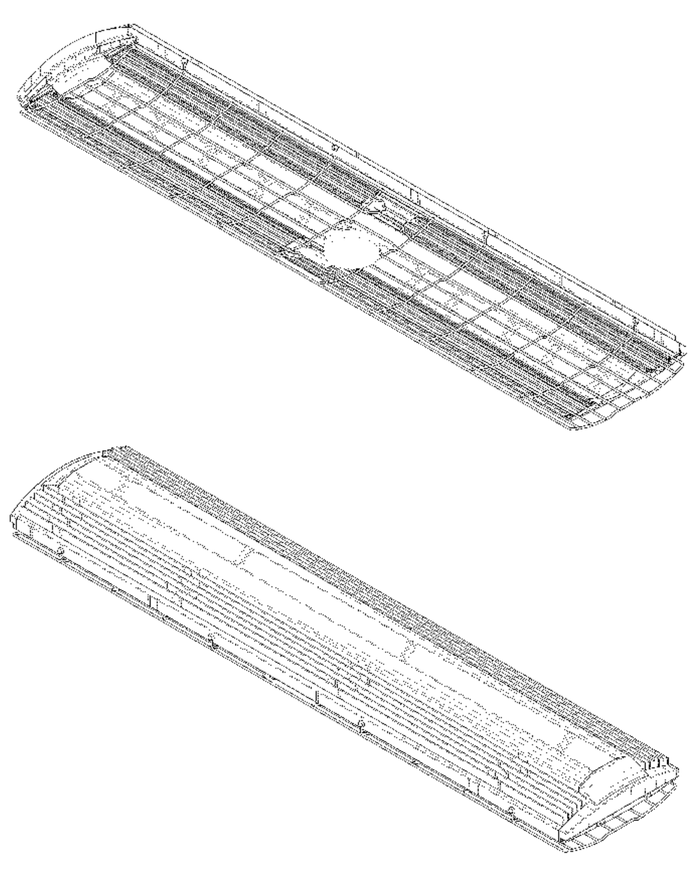

(56) **References Cited**

U.S. PATENT DOCUMENTS

| | | | | | |
|---|---|---|---|---|---|
| D449,400 | S | * | 10/2001 | Tillman et al. | D26/76 |
| D491,687 | S | * | 6/2004 | Thornton et al. | D26/76 |
| D495,085 | S | * | 8/2004 | Thornton et al. | D26/76 |
| D497,025 | S | * | 10/2004 | Waldmann | D26/78 |
| D503,821 | S | * | 4/2005 | Waldmann | D26/78 |
| 7,095,187 | B2 | | 8/2006 | Young | |
| 7,119,500 | B2 | | 10/2006 | Young | |
| 7,119,501 | B2 | | 10/2006 | Young | |
| 7,132,805 | B2 | | 11/2006 | Young | |
| 7,159,997 | B2 | | 1/2007 | Reo et al. | |
| D596,778 | S | * | 7/2009 | Yamazato | D26/76 |
| D597,701 | S | * | 8/2009 | Tran et al. | D26/76 |
| 7,626,345 | B2 | | 12/2009 | Young | |
| D610,294 | S | * | 2/2010 | Theusch | D26/76 |
| 7,810,963 | B2 | | 10/2010 | Peck | |
| 7,824,055 | B2 | | 11/2010 | Sherman | |
| 7,845,824 | B2 | | 12/2010 | Robotham | |
| 7,857,482 | B2 | | 12/2010 | Reo et al. | |
| 7,862,202 | B2 | * | 1/2011 | Laso et al. | 362/217.16 |
| D645,194 | S | * | 9/2011 | Budike et al. | D26/76 |
| 8,063,576 | B2 | | 11/2011 | Routledge | |
| 8,066,404 | B2 | | 11/2011 | Song et al. | |
| 8,087,807 | B2 | | 1/2012 | Liu et al. | |
| 8,109,647 | B2 | | 2/2012 | Soo et al. | |
| 8,157,420 | B2 | | 4/2012 | Song et al. | |
| D662,643 | S | * | 6/2012 | Takahashi et al. | D26/76 |
| 8,197,086 | B2 | * | 6/2012 | Watanabe et al. | 362/218 |
| D663,882 | S | * | 7/2012 | Muraishi et al. | D26/76 |
| 8,267,544 | B2 | | 9/2012 | Zheng et al. | |
| 8,360,613 | B2 | * | 1/2013 | Little, Jr. | 362/294 |
| 8,425,085 | B2 | | 4/2013 | Van Laanen et al. | |
| 8,434,914 | B2 | | 5/2013 | Li et al. | |
| 8,474,996 | B2 | | 7/2013 | Zhang et al. | |
| 8,573,799 | B2 | | 11/2013 | Lee et al. | |
| 2006/0146531 | A1 | | 7/2006 | Reo et al. | |
| 2009/0310354 | A1 | | 12/2009 | Zampini, II et al. | |
| 2010/0315813 | A1 | * | 12/2010 | Fugerer et al. | 362/235 |
| 2011/0141729 | A1 | | 6/2011 | Yang et al. | |
| 2011/0211330 | A1 | | 9/2011 | Wang | |
| 2011/0228528 | A1 | | 9/2011 | Yang et al. | |
| 2012/0014108 | A1 | | 1/2012 | Greenfield et al. | |
| 2012/0051050 | A1 | | 3/2012 | Lee et al. | |
| 2012/0087118 | A1 | | 4/2012 | Bailey et al. | |
| 2012/0162982 | A1 | | 6/2012 | Wang et al. | |
| 2012/0250309 | A1 | | 10/2012 | Handsaker | |
| 2012/0293994 | A1 | | 11/2012 | McMurray | |
| 2013/0083522 | A1 | | 4/2013 | Bowers et al. | |
| 2013/0094225 | A1 | | 4/2013 | Leichner | |
| 2013/0163245 | A1 | | 6/2013 | Yang et al. | |

* cited by examiner

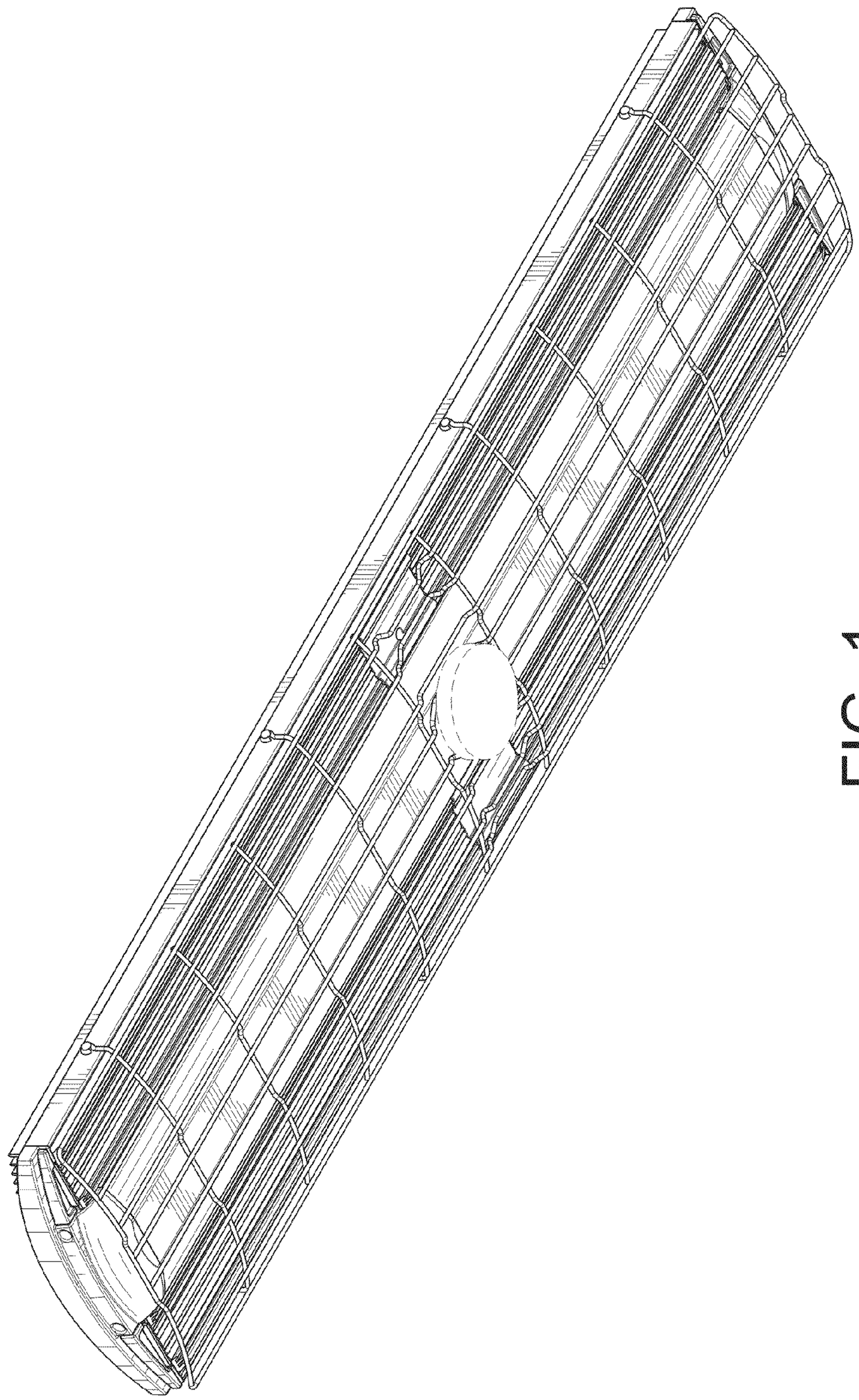

FIG. 1

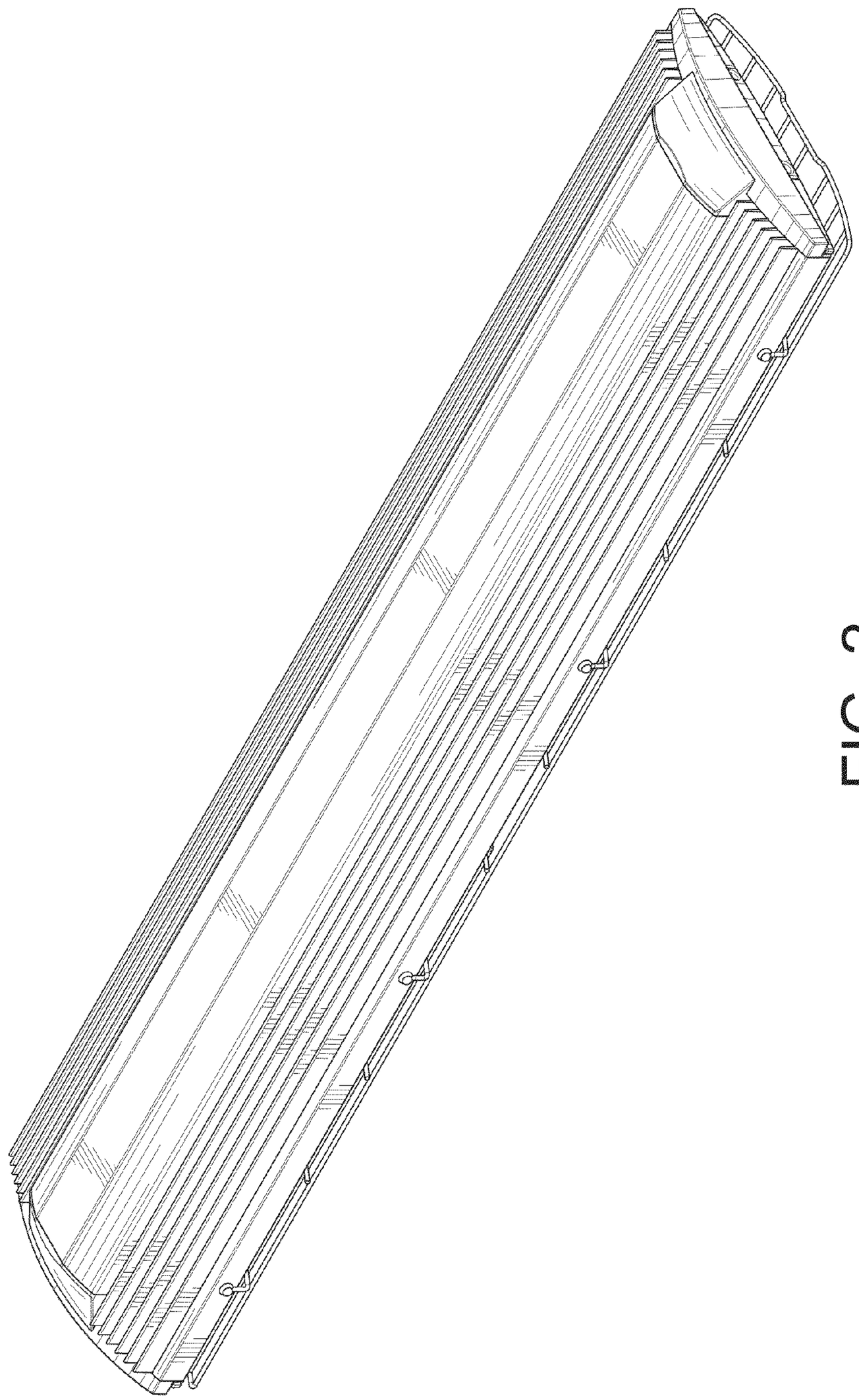

FIG. 2

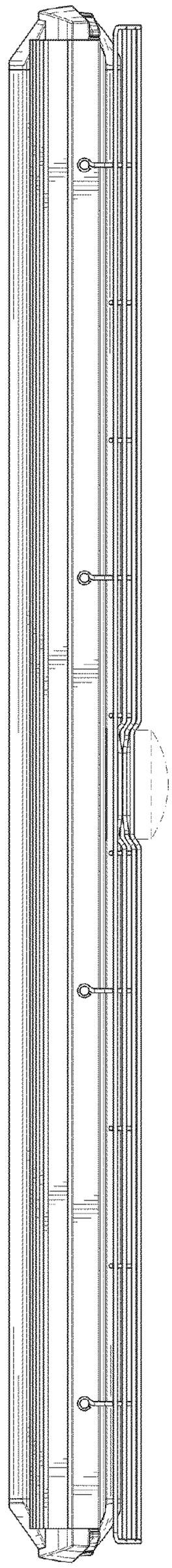

FIG. 3

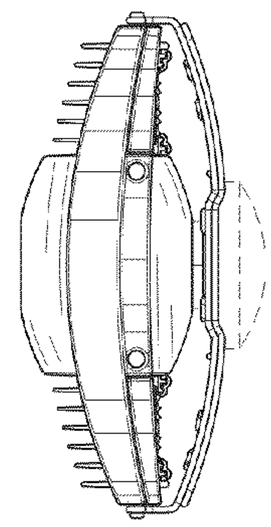

FIG. 6

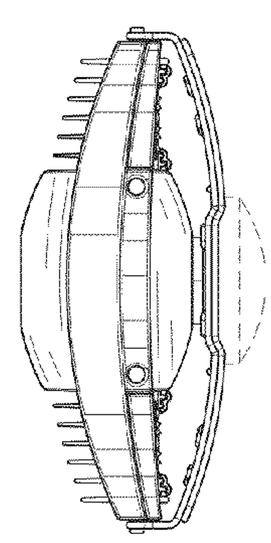

FIG. 4

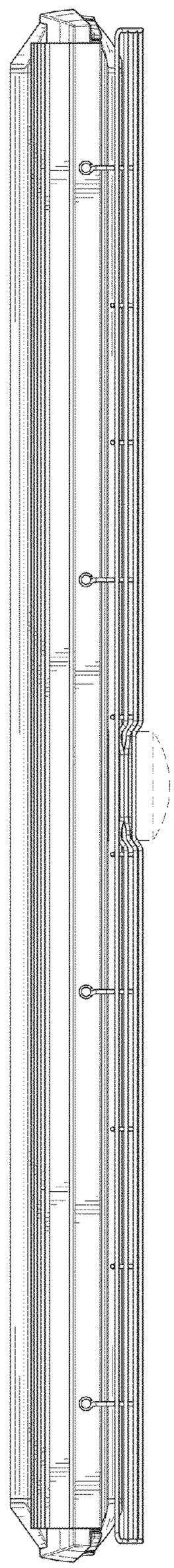

FIG. 5

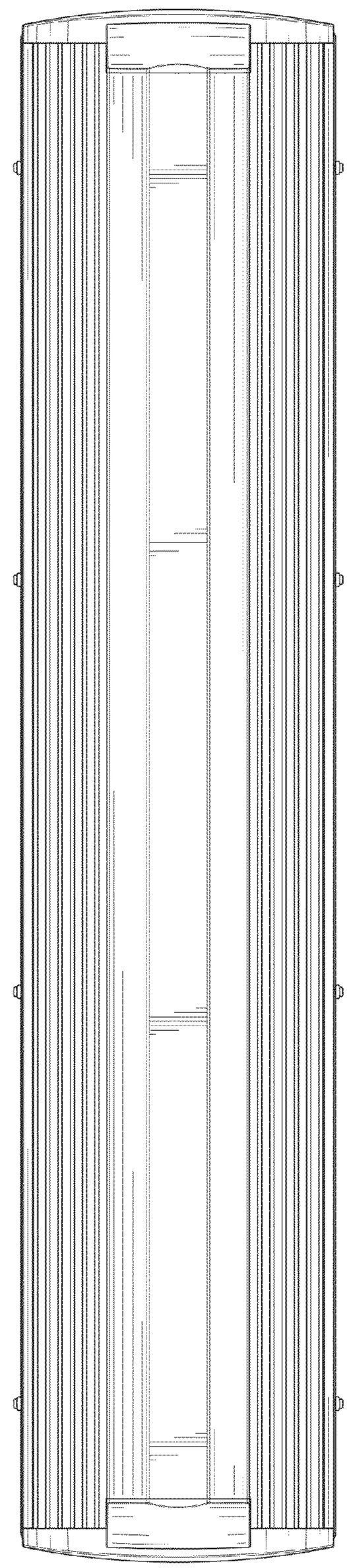

FIG. 7

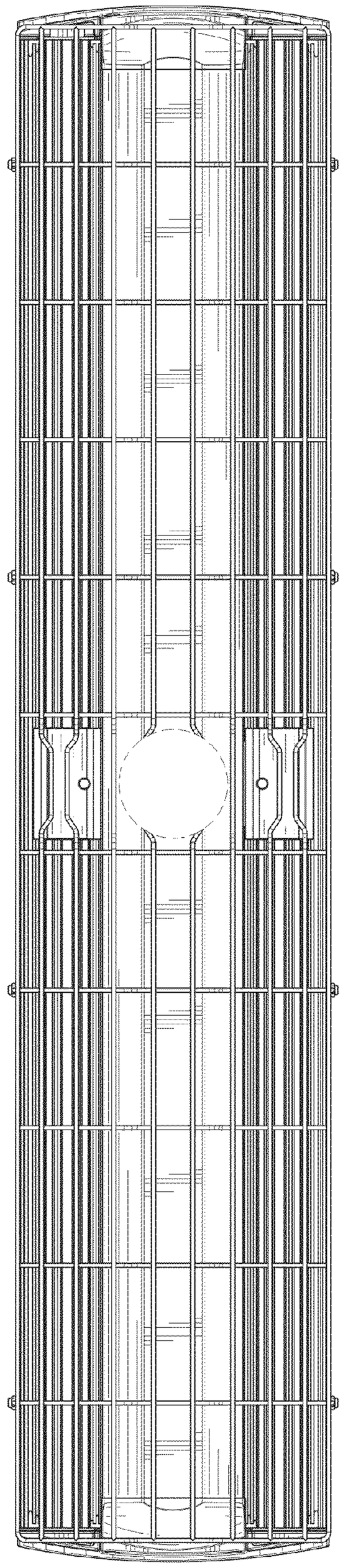

FIG. 8

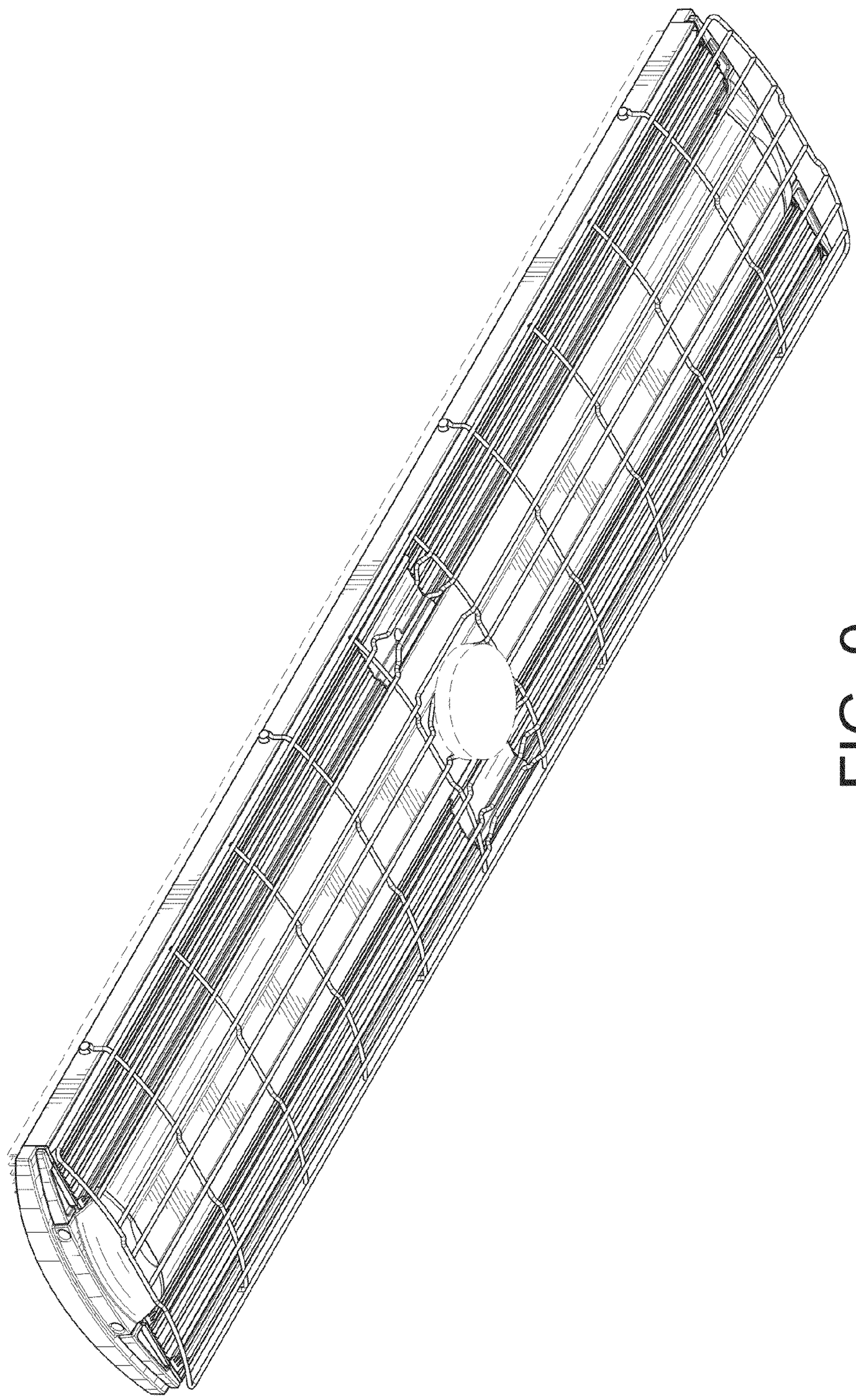

FIG. 9

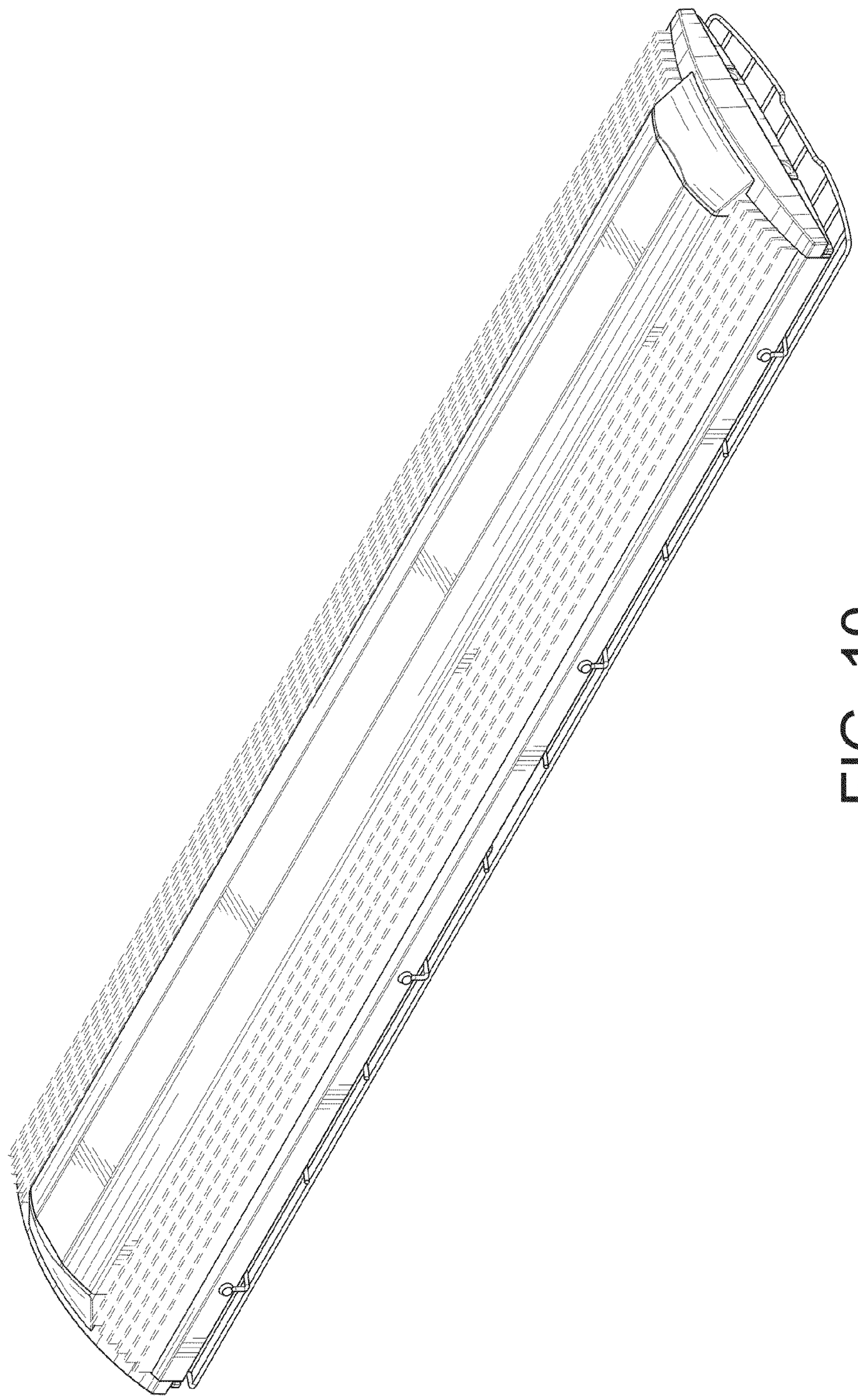

FIG. 10

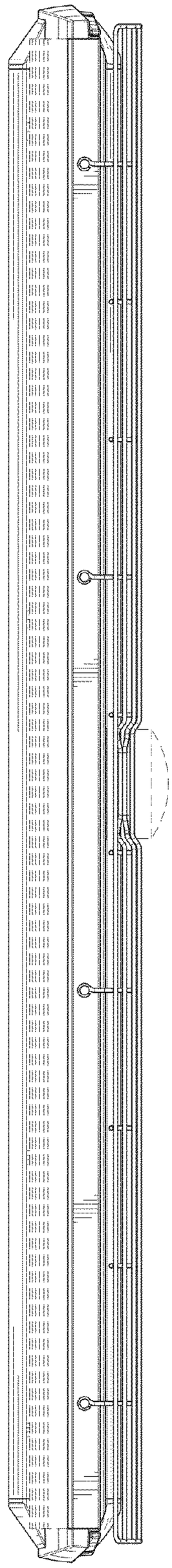

FIG. 11

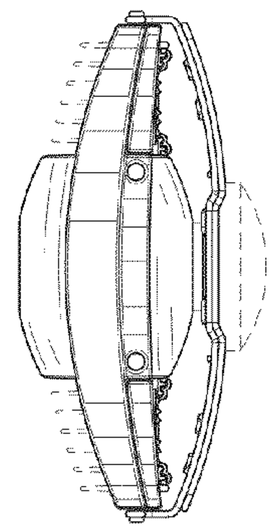

FIG. 14

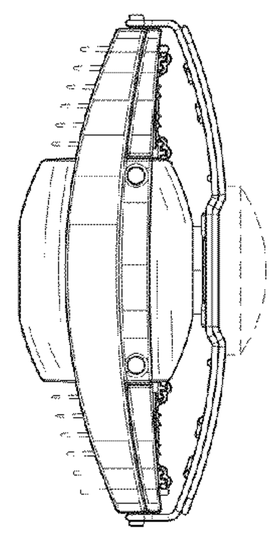

FIG. 12

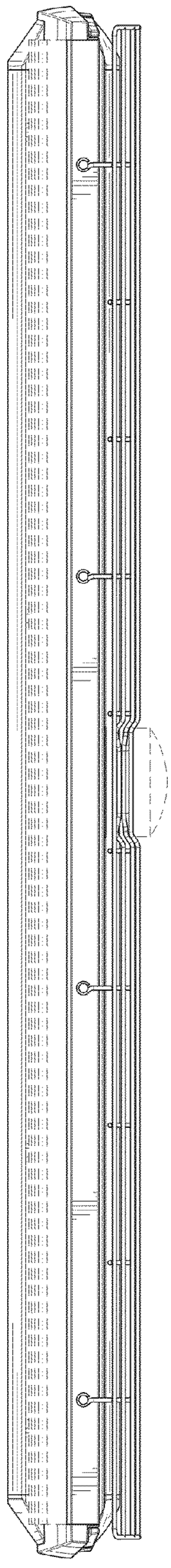

FIG. 13

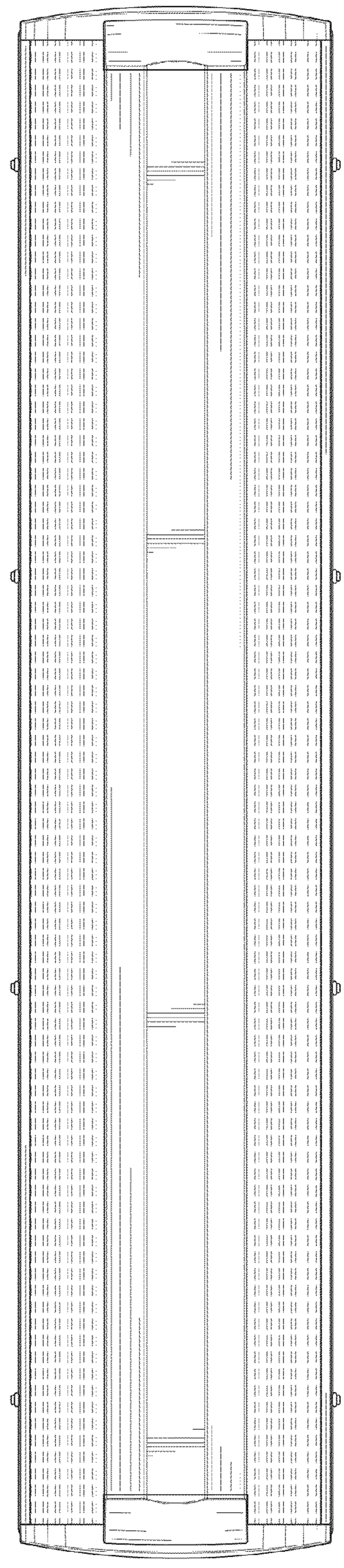

FIG. 15

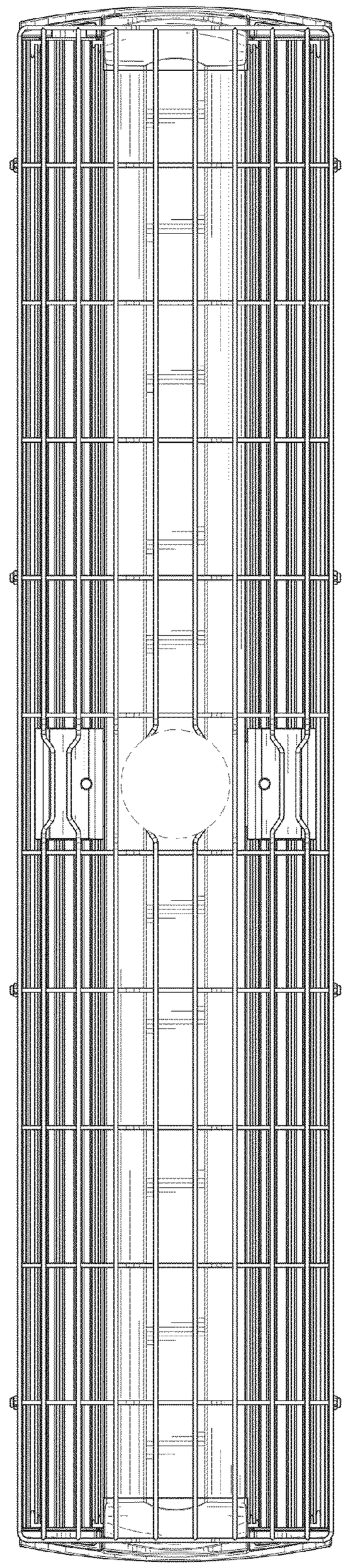

FIG. 16