US00D705274S

(12) United States Design Patent
Sirviö

(10) Patent No.: US D705,274 S
(45) Date of Patent: ** May 20, 2014

(54) **KNIFE CLAMP ASSEMBLY**

(75) Inventor: **Mikael Sirviö**, Hudiksvall (SE)

(73) Assignee: **Andritz Iggesund Tools AB**, Iggesund (SE)

(**) Term: **14 Years**

(21) Appl. No.: **29/414,370**

(22) Filed: **Feb. 28, 2012**

(30) **Foreign Application Priority Data**

Aug. 30, 2011 (EM) 001909722

(51) **LOC (10) Cl.** **15-03**

(52) **U.S. Cl.**
USPC **D15/28**

(58) **Field of Classification Search**
USPC D15/10, 11, 17, 21, 28, 29, 32; 144/176, 220, 230, 218, 229, 241; 407/40, 47, 49, 113, 42; 241/298, 92
See application file for complete search history.

(56) **References Cited**

U.S. PATENT DOCUMENTS

4,194,545 A * 3/1980 Kostermeier 144/230
5,060,875 A * 10/1991 McBride 241/242
5,271,440 A * 12/1993 Bradstreet et al. 144/176
5,271,442 A * 12/1993 Carpenter et al. 144/220
5,297,746 A * 3/1994 McBride et al. 241/242
5,469,902 A * 11/1995 Sharp et al. 144/241
6,058,989 A * 5/2000 LaGrange et al. 144/218
6,951,313 B2 * 10/2005 Frick et al. 241/92
6,968,879 B2 * 11/2005 Schuh et al. 144/174
7,140,408 B1 * 11/2006 Hinchliff et al. 144/241
7,159,626 B2 * 1/2007 Biller et al. 144/176
7,506,674 B2 * 3/2009 Biller et al. 144/176
7,677,282 B2 * 3/2010 Stager 144/241
7,681,609 B2 * 3/2010 Biller et al. 144/176
7,836,923 B2 * 11/2010 Stager 144/162.1

(Continued)

Primary Examiner — Mark Goodwin
(74) *Attorney, Agent, or Firm* — Fitzpatrick, Cella, Harper & Scinto

(57) **CLAIM**

The ornamental design for a knife clamp assembly, as shown and described.

DESCRIPTION

FIG. **1** is an exploded perspective view from above of a knife clamp assembly showing my new design;
FIG. **2** is an exploded perspective view from below of the knife clamp assembly of FIG. **1**;
FIG. **3** is a front side view of the upper clamp assembly component shown in FIG. **1**;
FIG. **4** is a top view of the component shown in FIG. **3**;
FIG. **5** is a right end view of the component shown in FIGS. **3** and **4**;
FIG. **6** is a left end view of the component shown in FIGS. **3** and **4**;
FIG. **7** is a rear view of the component shown in FIGS. **3** and **4**;
FIG. **8** is a bottom view of the component shown in FIGS. **3** and **4**;
FIG. **9** is a front side view of the lower clamp assembly component shown in FIG. **1**;
FIG. **10** is a top side view of the component shown in FIG. **3**;
FIG. **11** is a right end view of the component shown in FIGS. **9** and **10**;
FIG. **12** is a left end view of the component shown in FIGS. **9** and **10**;
FIG. **13** is a rear view of the component shown in FIGS. **9** and **10**; and,
FIG. **14** is a bottom view of the component shown in FIGS. **9** and **10**.

1 Claim, 6 Drawing Sheets

Dp (above diagonal) and V^2 (below diagonal)
# of animals = 847 , breed = CPRTC

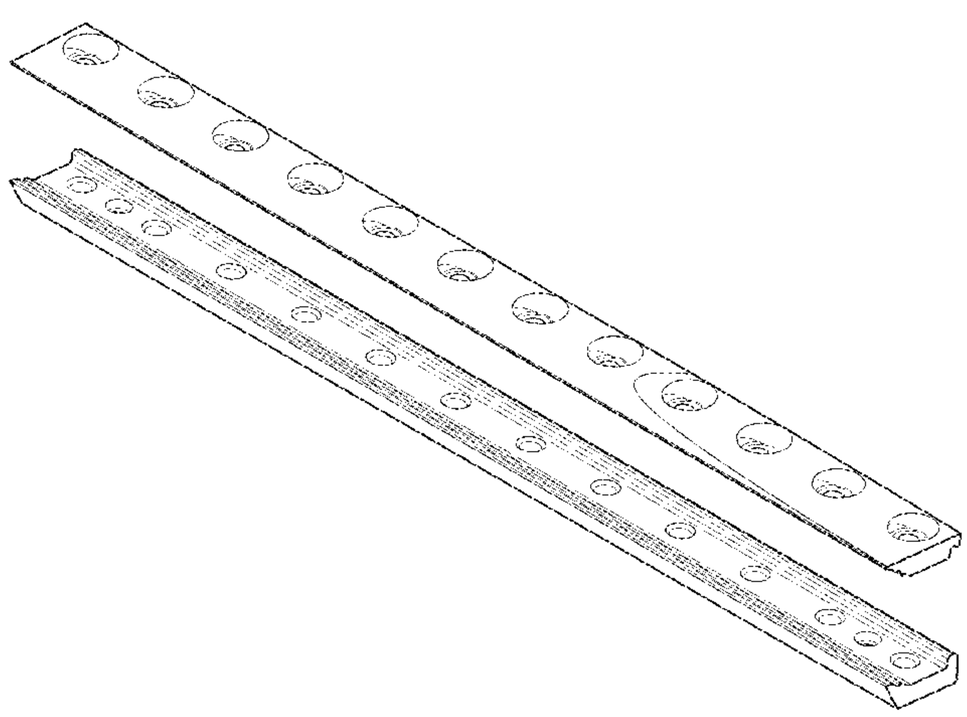

(56) **References Cited**

U.S. PATENT DOCUMENTS

8,082,958 B2 * 12/2011 Engnell et al. 144/176
8,281,826 B2 * 10/2012 Uelmen et al. 144/162.1
2003/0019543 A1 * 1/2003 Schuh et al. 144/176
2010/0218850 A1 * 9/2010 Uelmen et al. 144/218

* cited by examiner

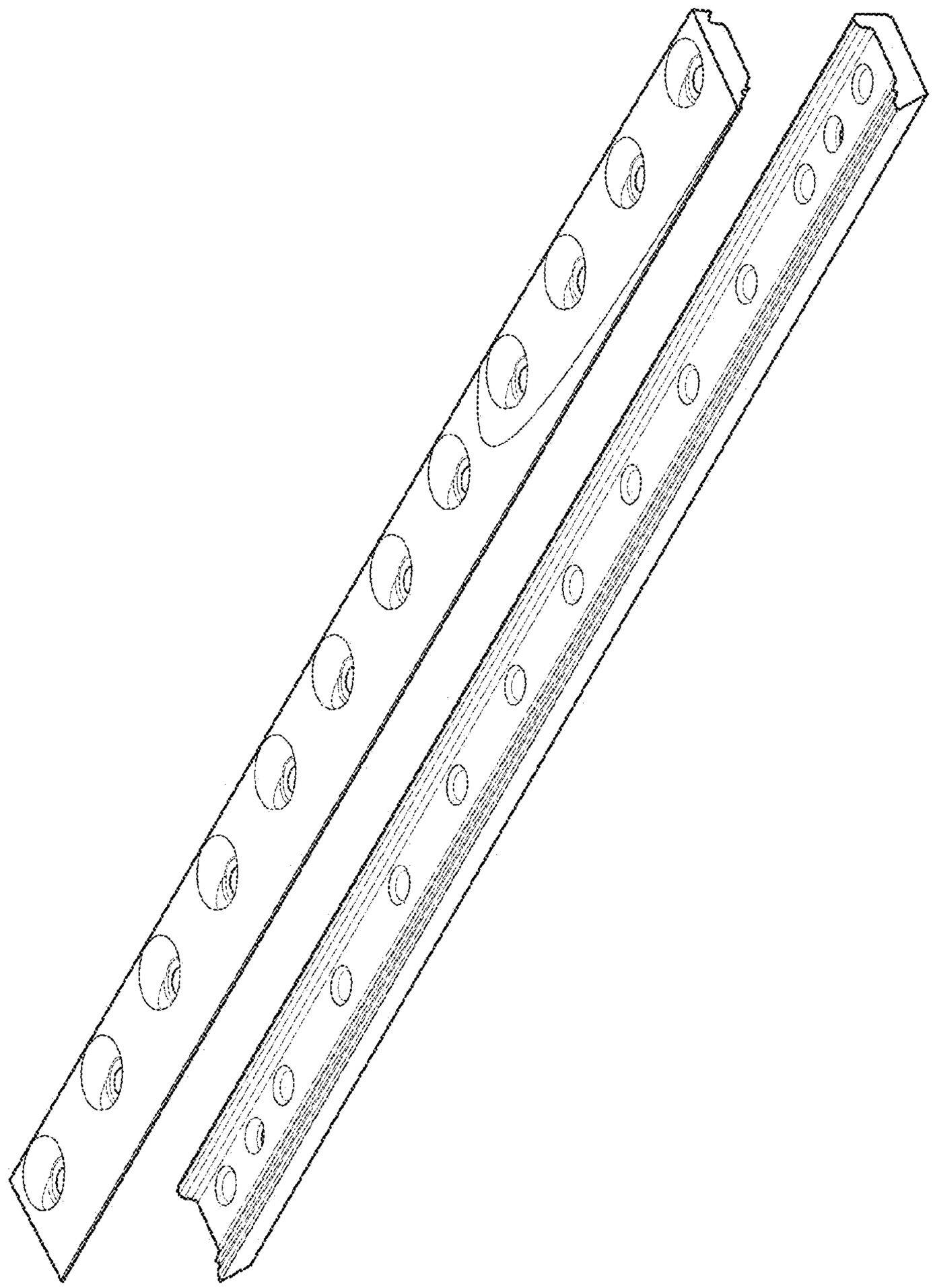

Dp (above diagonal) and V^2 (below diagonal)
# of animals = 847 , breed = CPRTC

FIG. 1

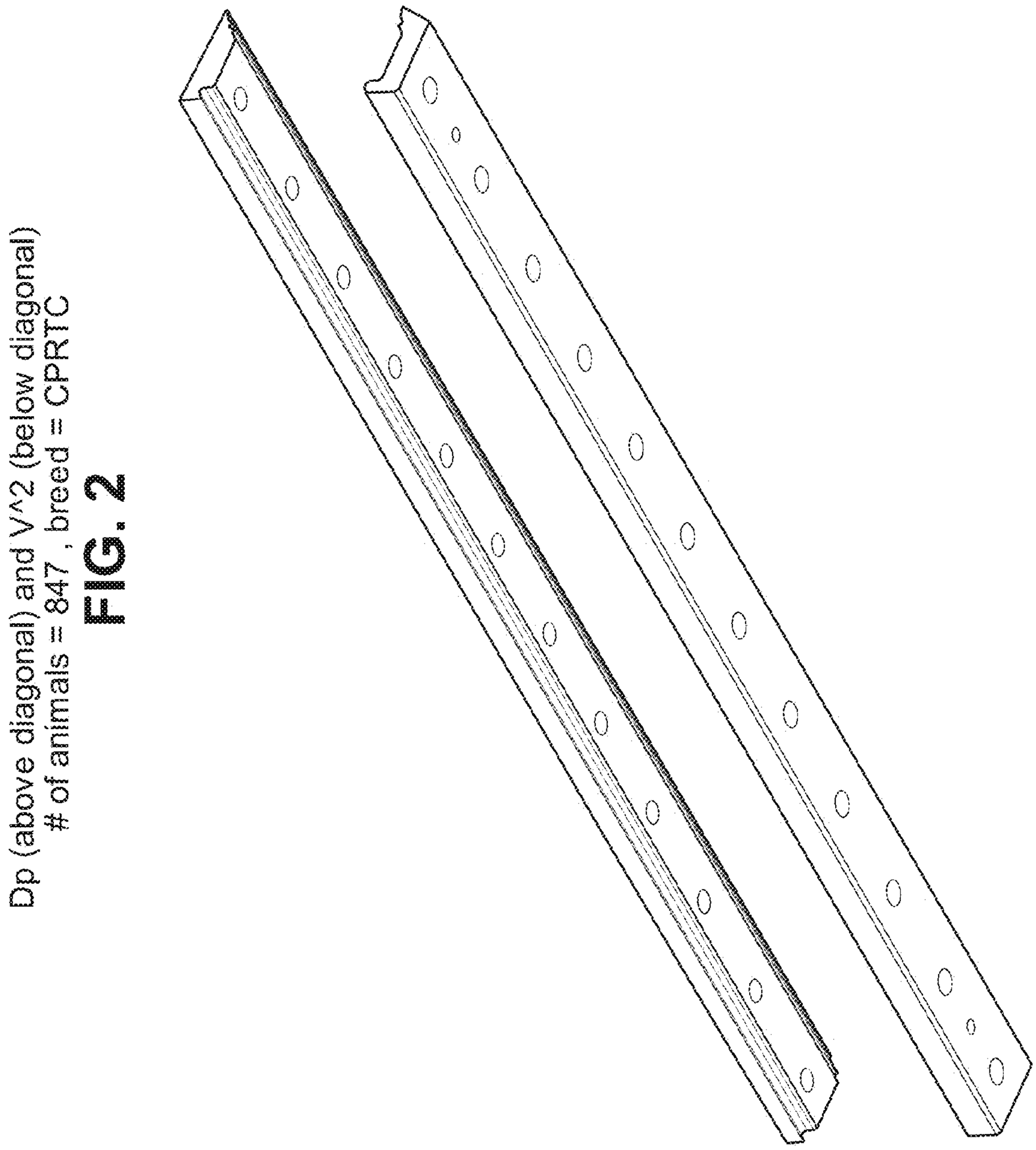
Dp (above diagonal) and V^2 (below diagonal)
# of animals = 847 , breed = CPRTC

FIG. 2

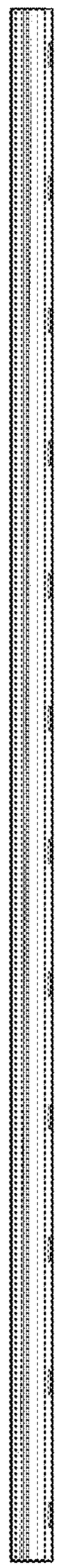

Dp (above diagonal) and V^2 (below diagonal)
# of animals = 847, breed = CPRTC

FIG. 3

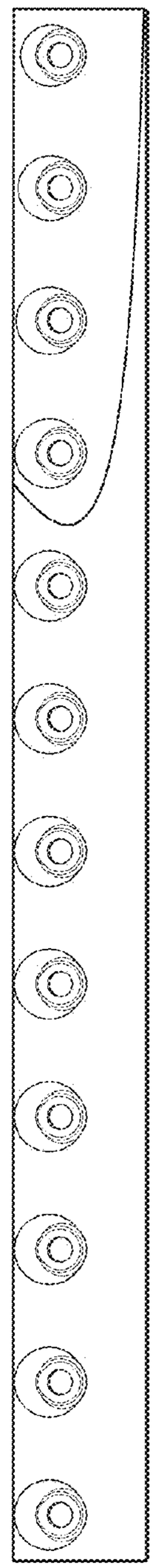

FIG. 4

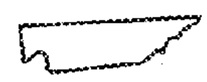

FIG. 6

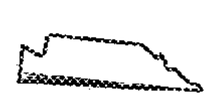

FIG. 5

Dp (above diagonal) and V^2 (below diagonal)
# of animals = 847 , breed = CPRTC

FIG. 7

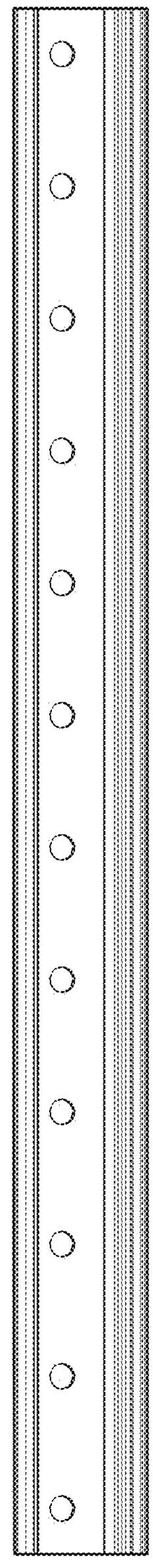

FIG. 8

Dp (above diagonal) and V^2 (below diagonal)
# of animals = 847 , breed = CPRTC

FIG. 9

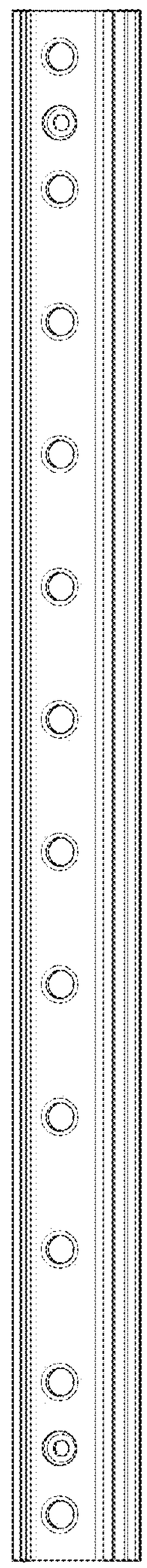

FIG. 10

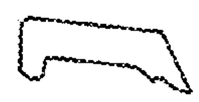

FIG. 11

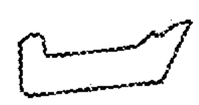

FIG. 12

Dp (above diagonal) and V^2 (below diagonal)
# of animals = 847 , breed = CPRTC

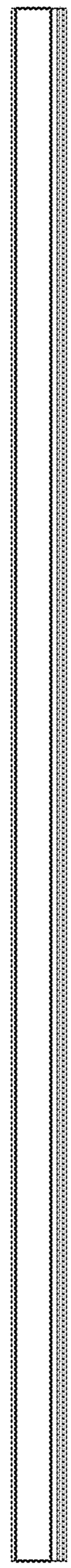

FIG. 13

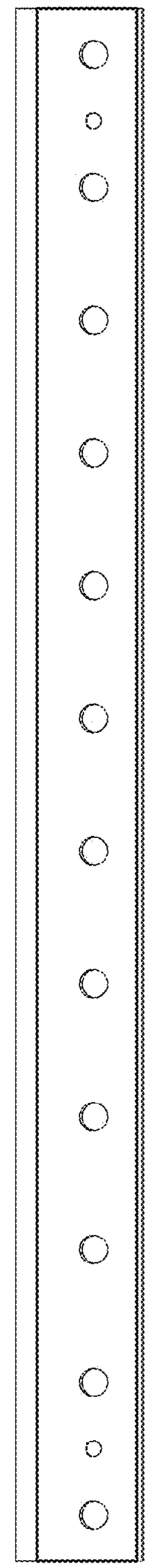

FIG. 14