US00D704810S

(12) United States Design Patent

Hashimoto et al.

(10) Patent No.: US D704,810 S
(45) Date of Patent: ** May 13, 2014

(54) **FAUCET WITH SENSOR**

(71) Applicant: **LIXIL Corporation**, Tokyo (JP)

(72) Inventors: **Miyuki Hashimoto**, Tokyo (JP); **Naoki Domoto**, Toyko (JP)

(73) Assignee: **LIXIL Corporation**, Tokyo (JP)

(**) Term: **14 Years**

(21) Appl. No.: **29/476,414**

(22) Filed: **Dec. 13, 2013**

(30) **Foreign Application Priority Data**

Jun. 21, 2013 (JP) 2013-014074

(51) **LOC (10) Cl.** **23-01**

(52) **U.S. Cl.**
USPC **D23/255**

(58) **Field of Classification Search**
USPC D23/238–243, 255, 257; 4/675–678; 137/801; D6/542
See application file for complete search history.

(56) **References Cited**

U.S. PATENT DOCUMENTS

D607,976 S * 1/2010 Lammel et al. D23/255
D642,240 S * 7/2011 Flowers et al. D23/255

* cited by examiner

Primary Examiner — Robert Delehanty
(74) *Attorney, Agent, or Firm* — Nath, Goldberg & Meyer; Jerald L. Meyer

(57) **CLAIM**

The ornamental design for a faucet with sensor, as shown and described.

DESCRIPTION

FIG. **1** is a front perspective view of a faucet with sensor showing our new design;
FIG. **2** is a front view thereof;
FIG. **3** is a rear view thereof;
FIG. **4** is a side view thereof, the opposite side view being a mirror image;
FIG. **5** is a top view thereof;
FIG. **6** is a bottom view thereof;
FIG. **7** is a cross-sectional view thereof, taken along line A-A of FIG. **4**;
FIG. **8** is a cross-sectional view thereof, taken along line B-B of FIG. **4**; and,
FIG. **9** is a cross-sectional view thereof, taken along line C-C of FIG. **4**.

1 Claim, 5 Drawing Sheets

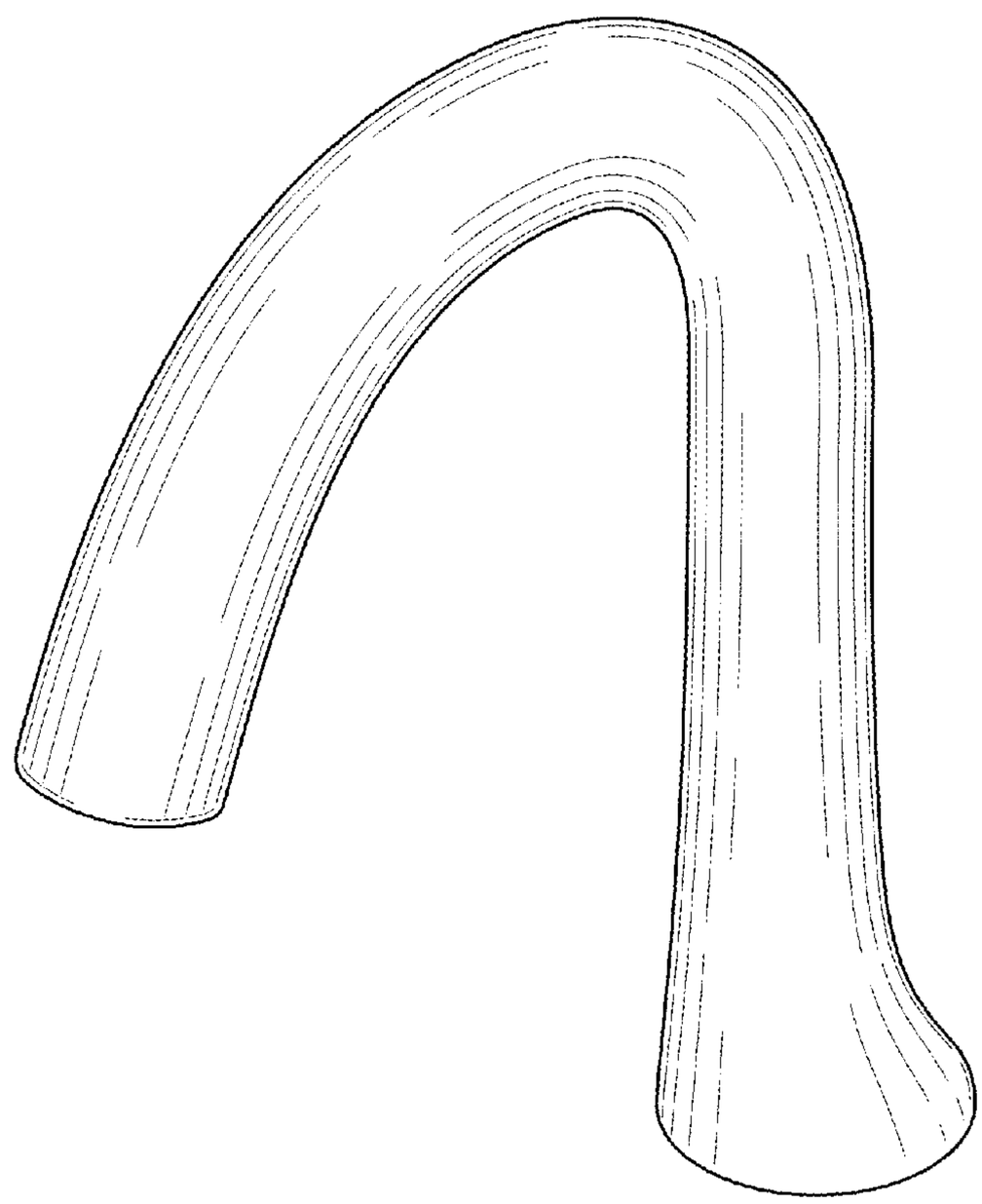

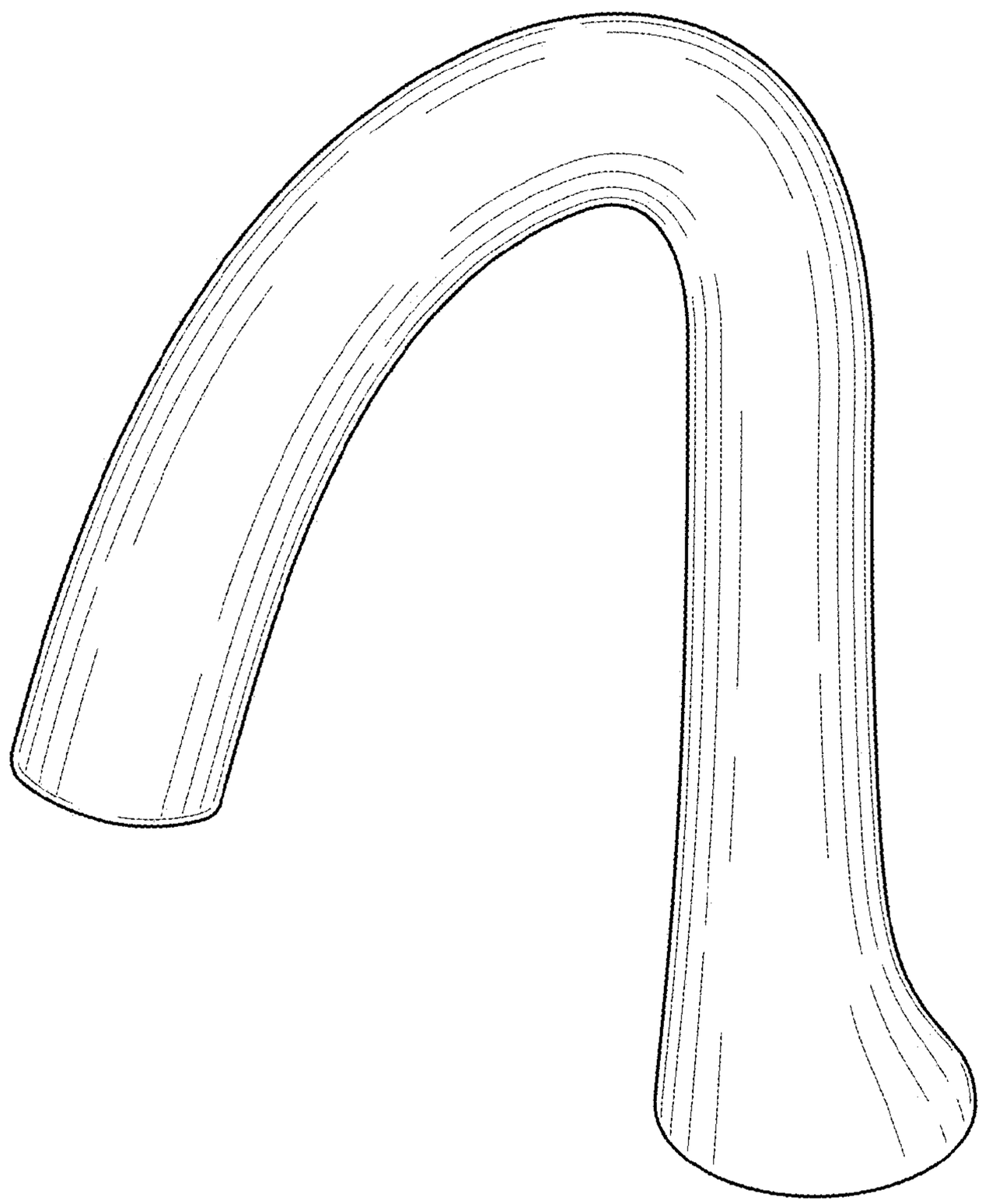

FIG. 1

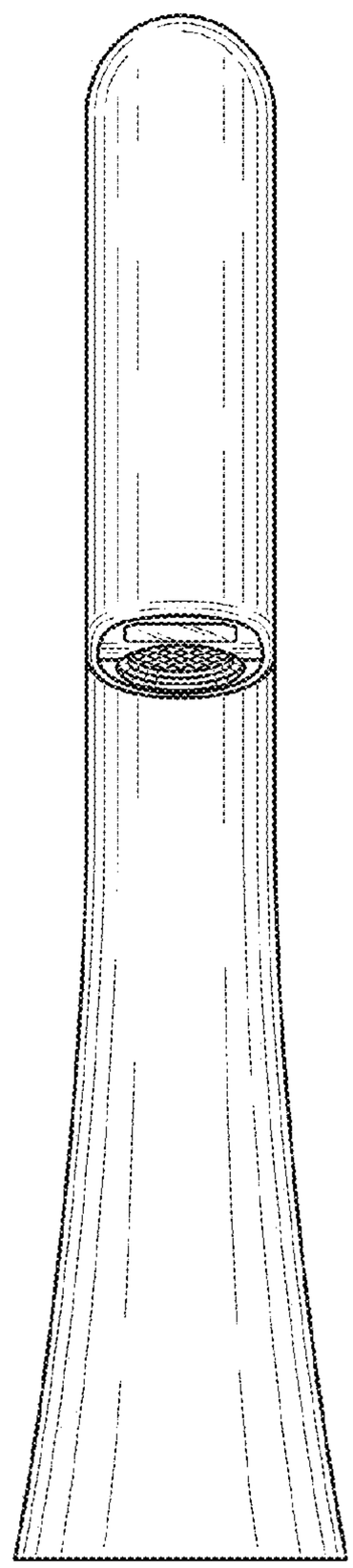

FIG. 2

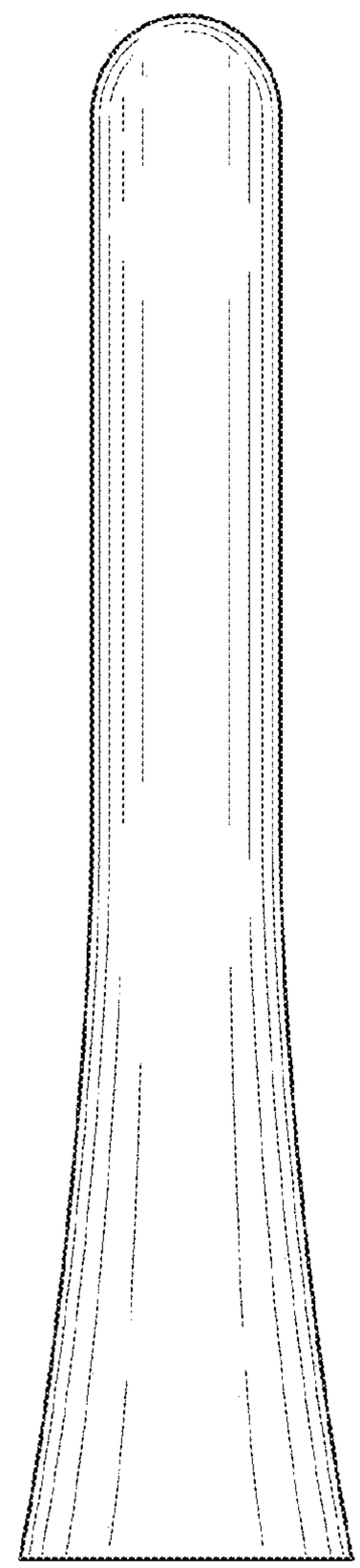

FIG. 3

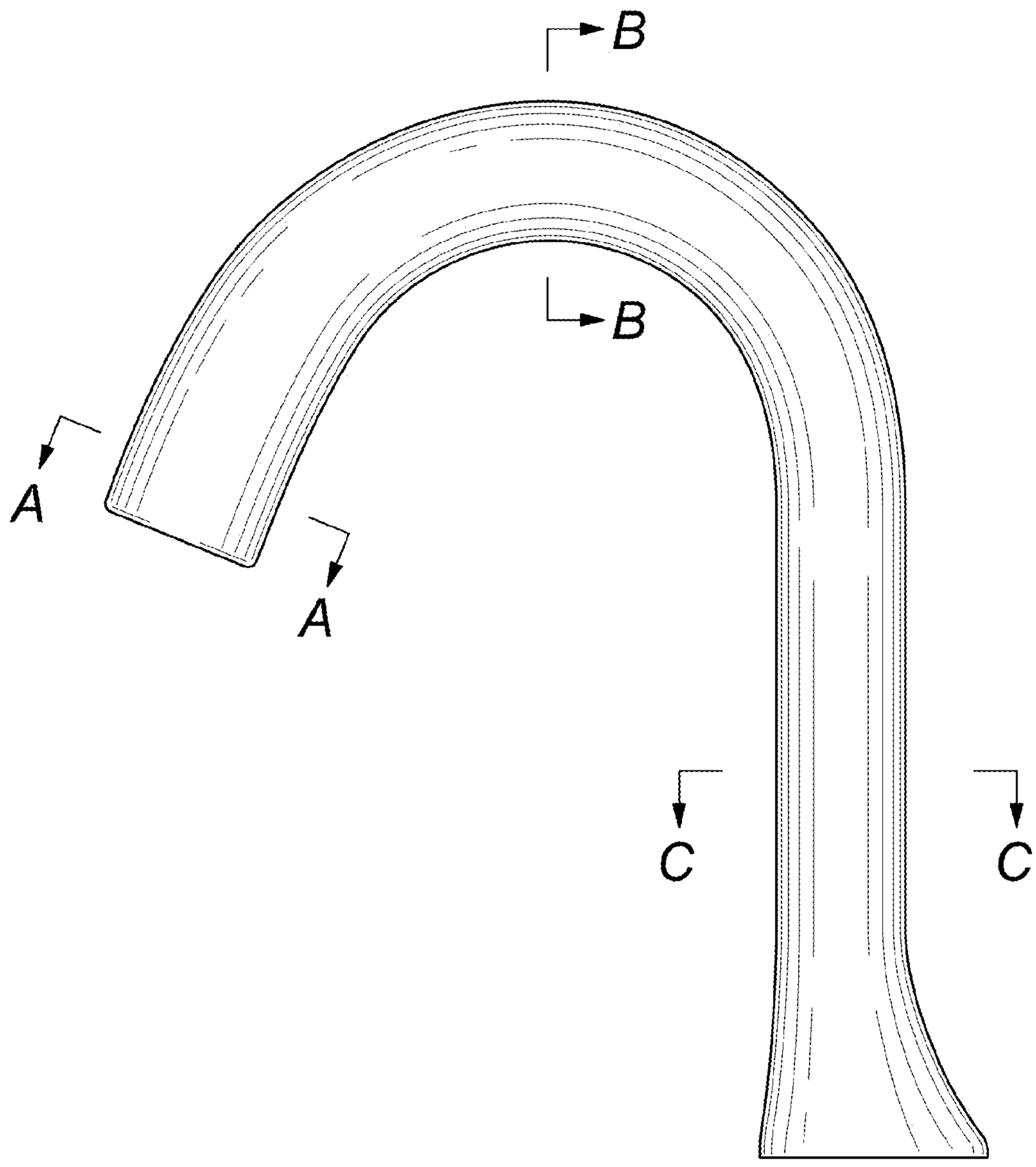

FIG. 4

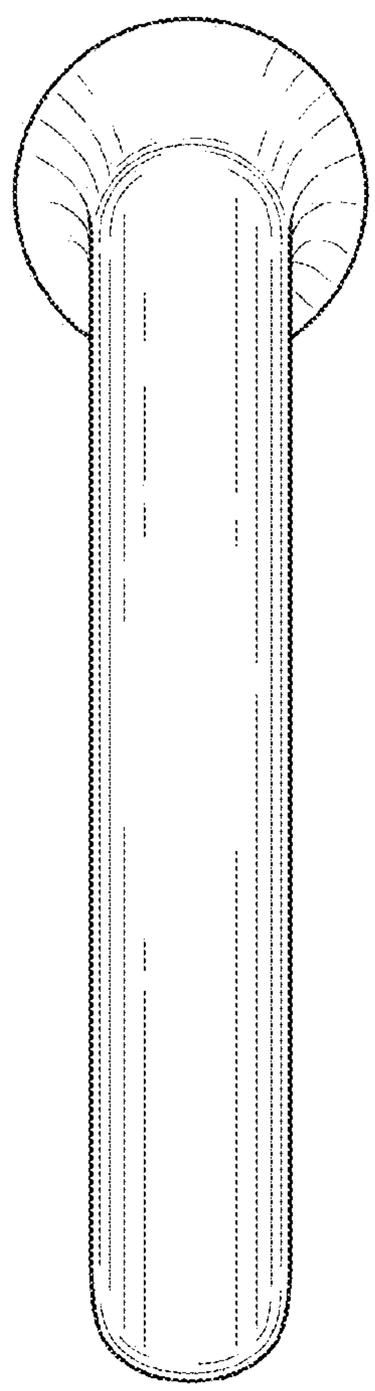

FIG. 5

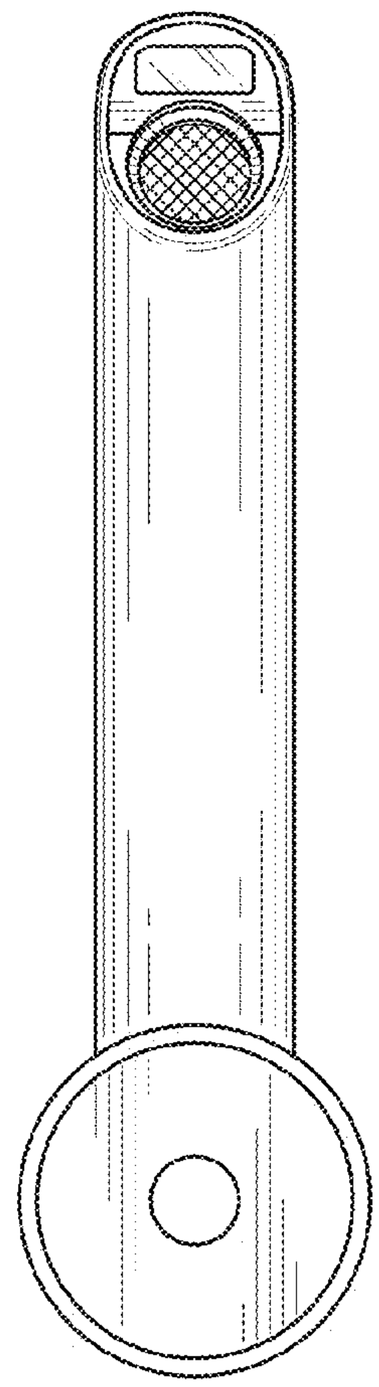

FIG. 6

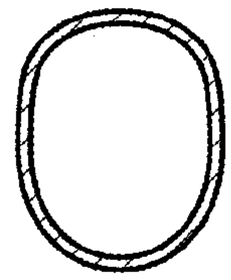

FIG. 7

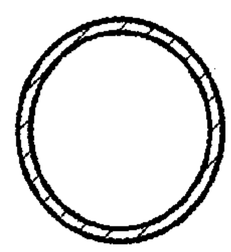

FIG. 8

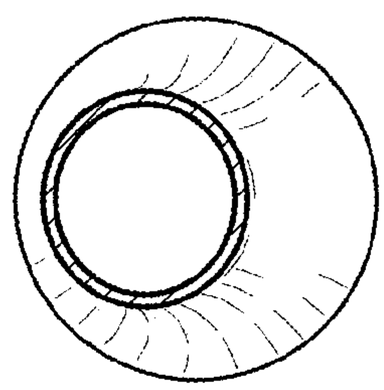

FIG. 9