US00D702683S

(12) United States Design Patent

Yeung

(10) Patent No.: US D702,683 S
(45) Date of Patent: ** Apr. 15, 2014

(54) **ELECTRONIC DISPLAY EQUIPMENT**

(71) Applicant: **Peter Yeung**, Redondo Beach, CA (US)

(72) Inventor: **Peter Yeung**, Redondo Beach, CA (US)

(**) Term: **14 Years**

(21) Appl. No.: **29/434,527**

(22) Filed: **Oct. 13, 2012**

(51) **LOC (10) Cl.** **14-02**

(52) **U.S. Cl.**
USPC **D14/371**

(58) **Field of Classification Search**
USPC D13/199, 101, 107, 108, 118, 123, 162, D13/184; D14/432, 433, 434, 440, 125, D14/126, 127, 128, 129, 371, 374, 380; 361/600, 601, 679.01, 679.09, 688; 248/917–924; 348/184, 739, 761, 791, 348/825, 834, 835

See application file for complete search history.

(56) **References Cited**

U.S. PATENT DOCUMENTS

4,576,430	A	*	3/1986	Dufresne	439/429
D367,042	S	*	2/1996	Morrow et al.	D13/184
D409,587	S	*	5/1999	Chuo et al.	D14/380
D431,230	S	*	9/2000	Began	D13/184
D533,525	S	*	12/2006	Arie	D14/129
D563,093	S	*	3/2008	Nussberger	D3/201
D587,504	S	*	3/2009	Russell et al.	D6/570
D600,696	S	*	9/2009	Andre et al.	D14/371
D636,747	S	*	4/2011	Buzzard et al.	D14/126
D655,291	S	*	3/2012	Scheper et al.	D14/371

OTHER PUBLICATIONS

Internet Reference: www.slashgear.com, NEC CRV43 43-inch curved LCD, Jun. 4, 2009, 1 page and 4 images.*

* cited by examiner

Primary Examiner — Derrick Holland

(57) **CLAIM**

The ornamental design for an electronic display equipment, substantially as shown and described.

DESCRIPTION

FIG. **1** is a front view of an electronic equipment in accordance with the present design;
FIG. **2** Is a back view thereof:
FIG. **3** Is a top view thereof;
FIG. **4** Is a bottom view thereof;
FIG. **5** is a left side view thereof;
FIG. **6** is a right side view thereof;
FIG. **7** is a left side perspective view thereof; and,
FIG. **8** is a right side perspective view thereof.

The design in this patent application is intended to be an ornamental design for a curved electronic display. In the illustration sheet labeled as "Sheet 1 of 5", the dotted lines in the figure titled, "FIG. **1**" indicate the boundaries of the glass surface of the curved electronic display. In the illustration sheet labeled as "Sheet 5 of 5", the dotted lines in the illustrations titled, "FIG. **7**" and "FIG. **8**" indicate the boundaries of the glass surface of the curved electronic display.

1 Claim, 5 Drawing Sheets

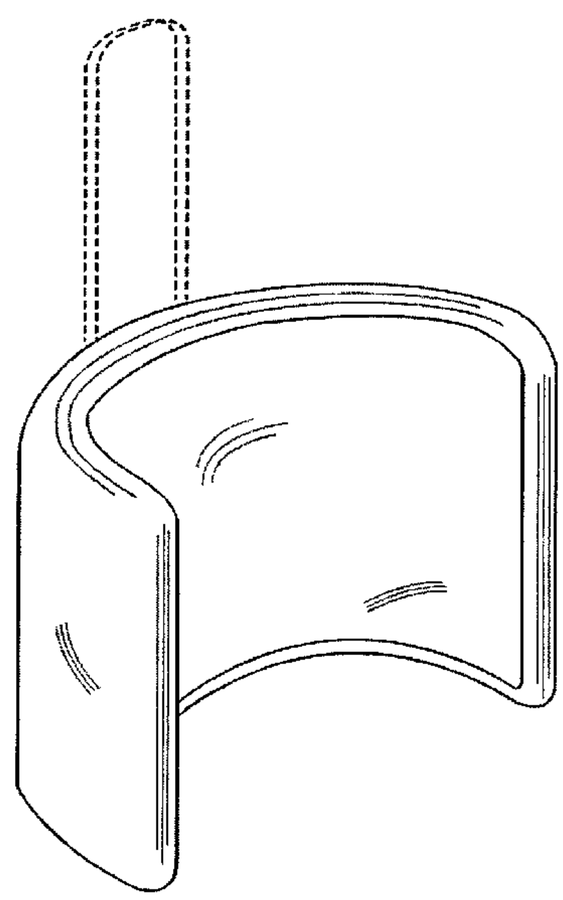

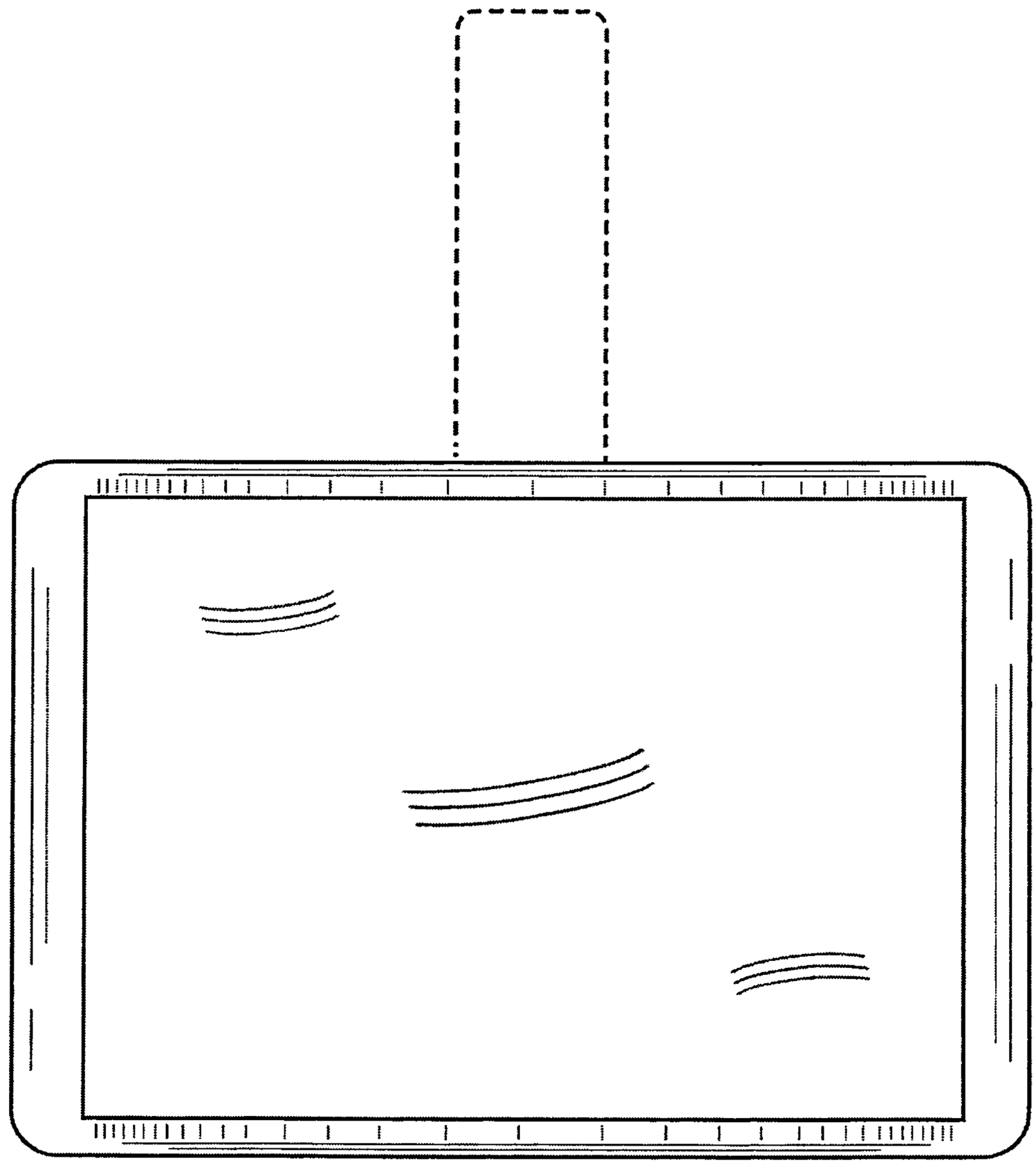

FIG. 1

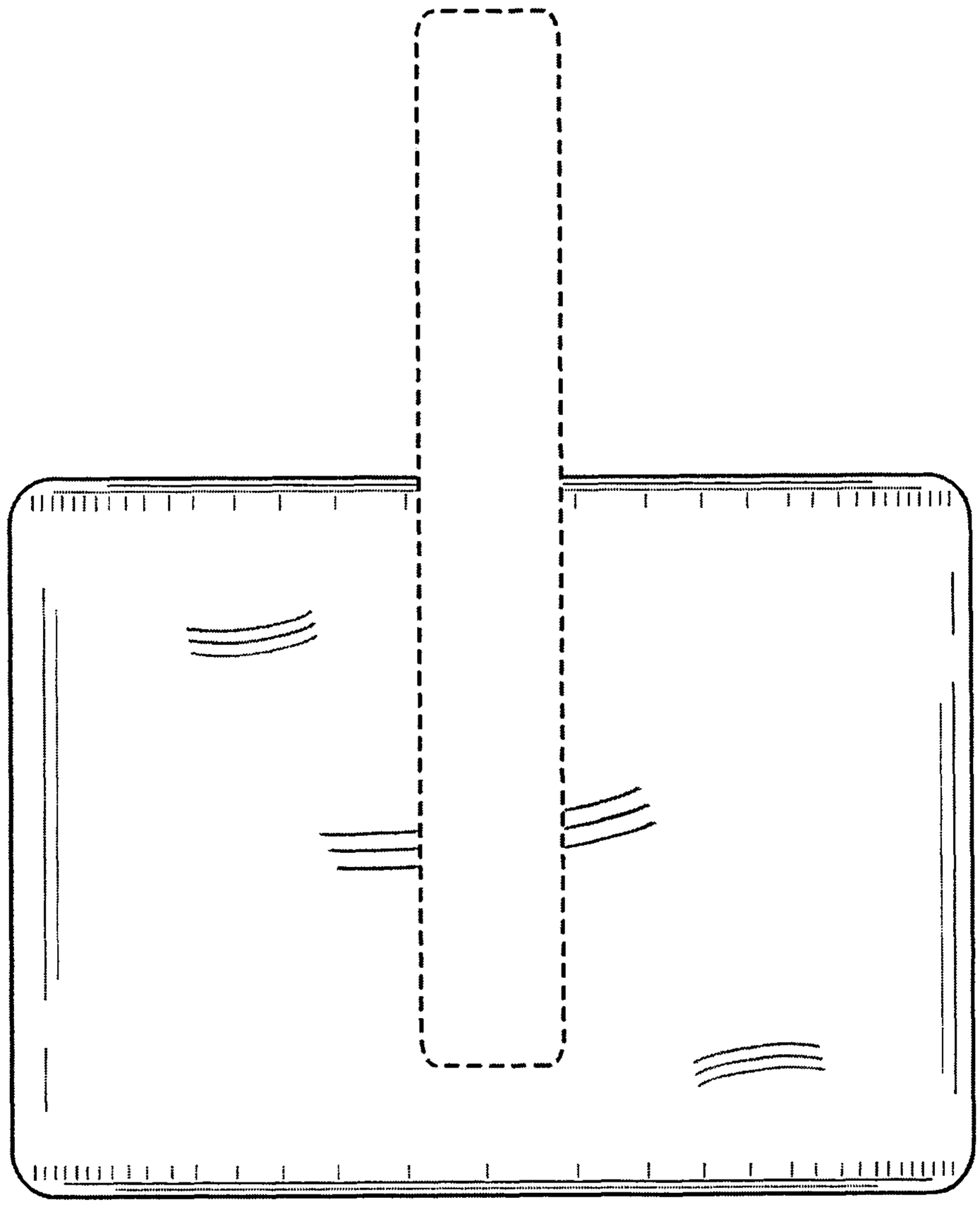

FIG. 2

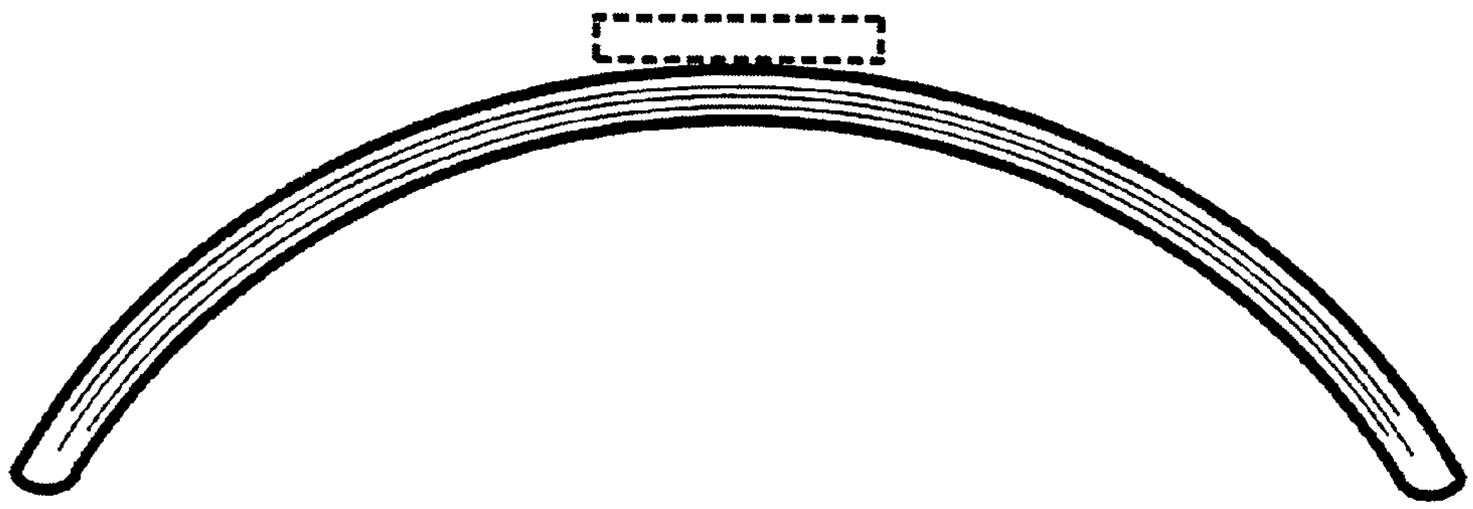

FIG. 3

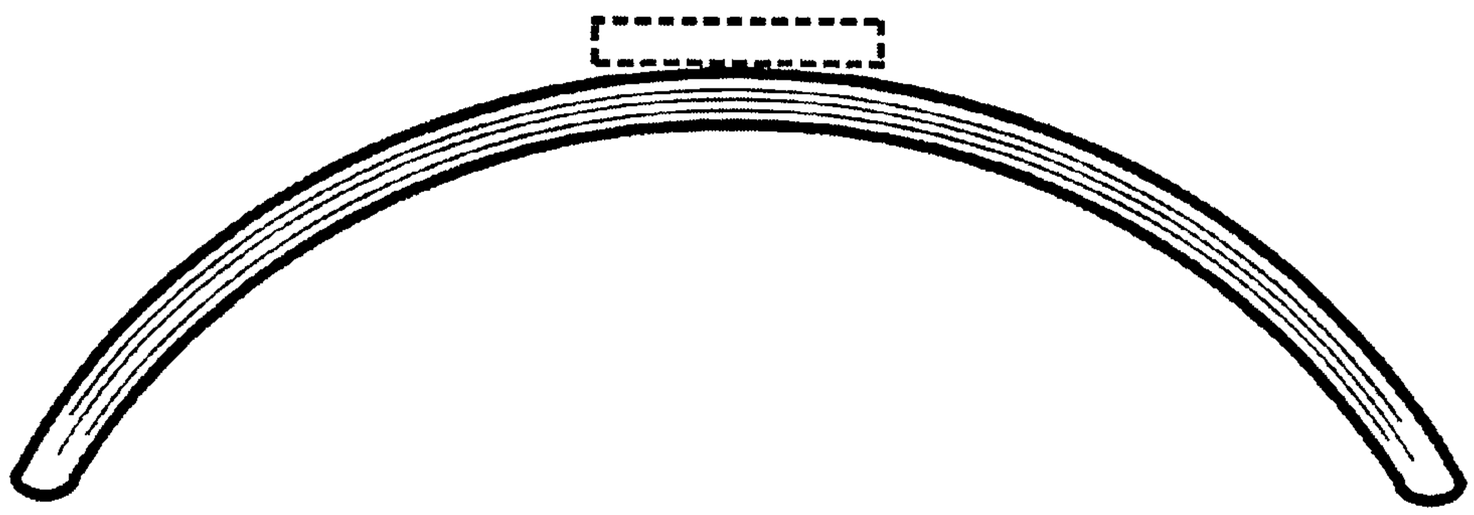

FIG. 4

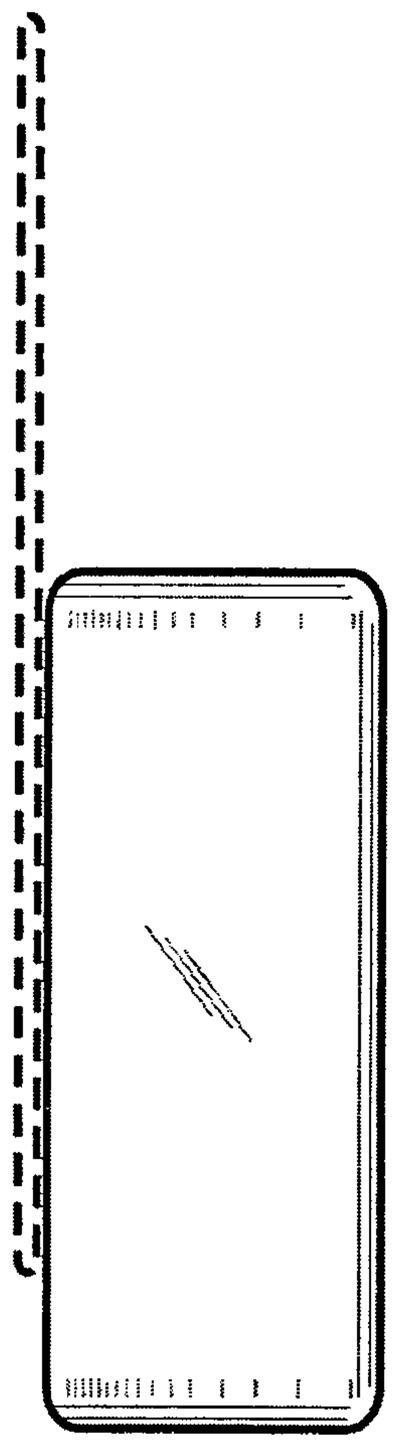

FIG. 5

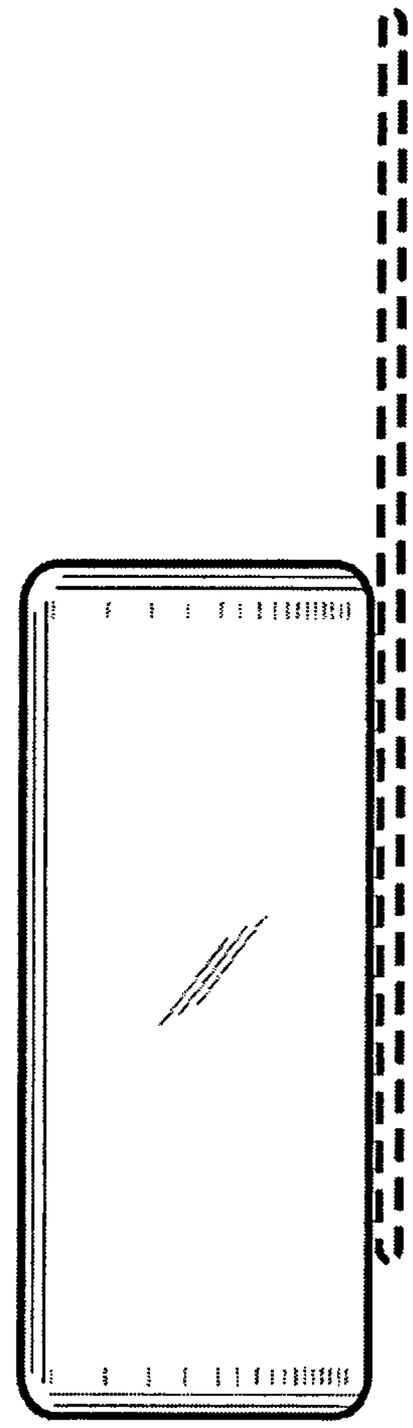

FIG. 6

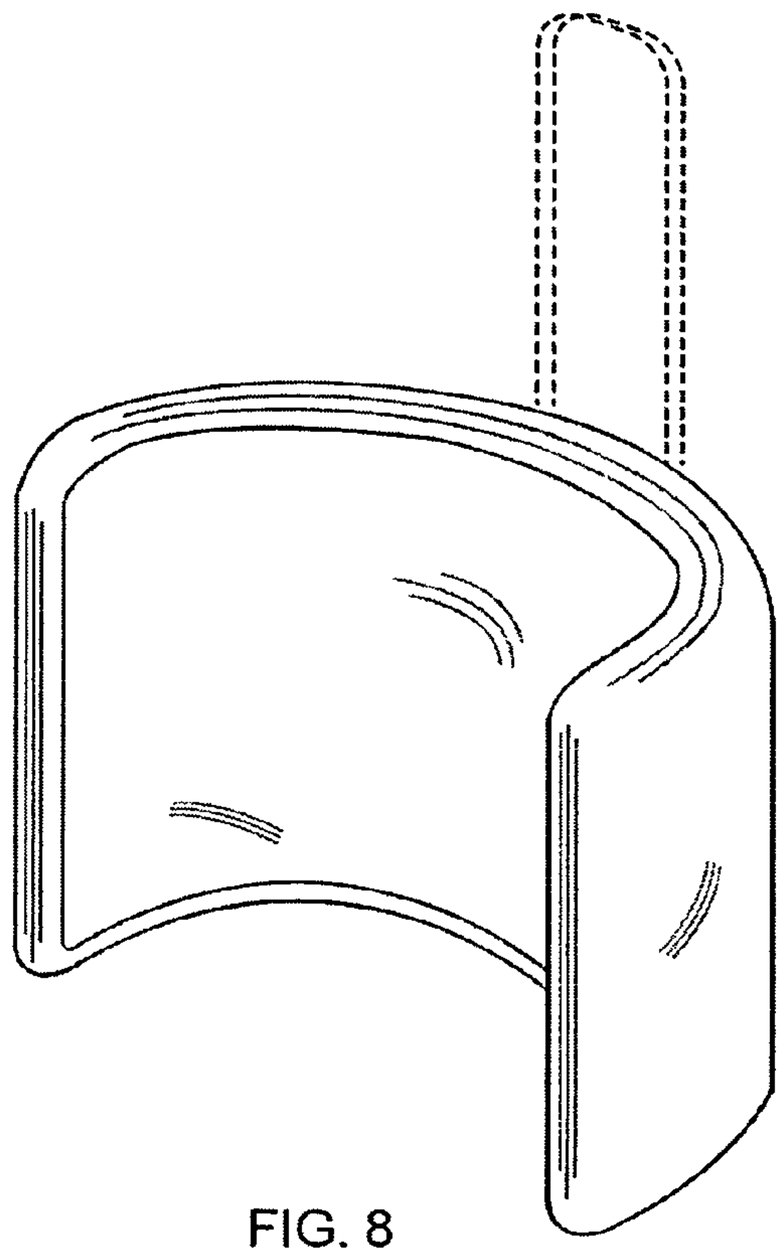

FIG. 8

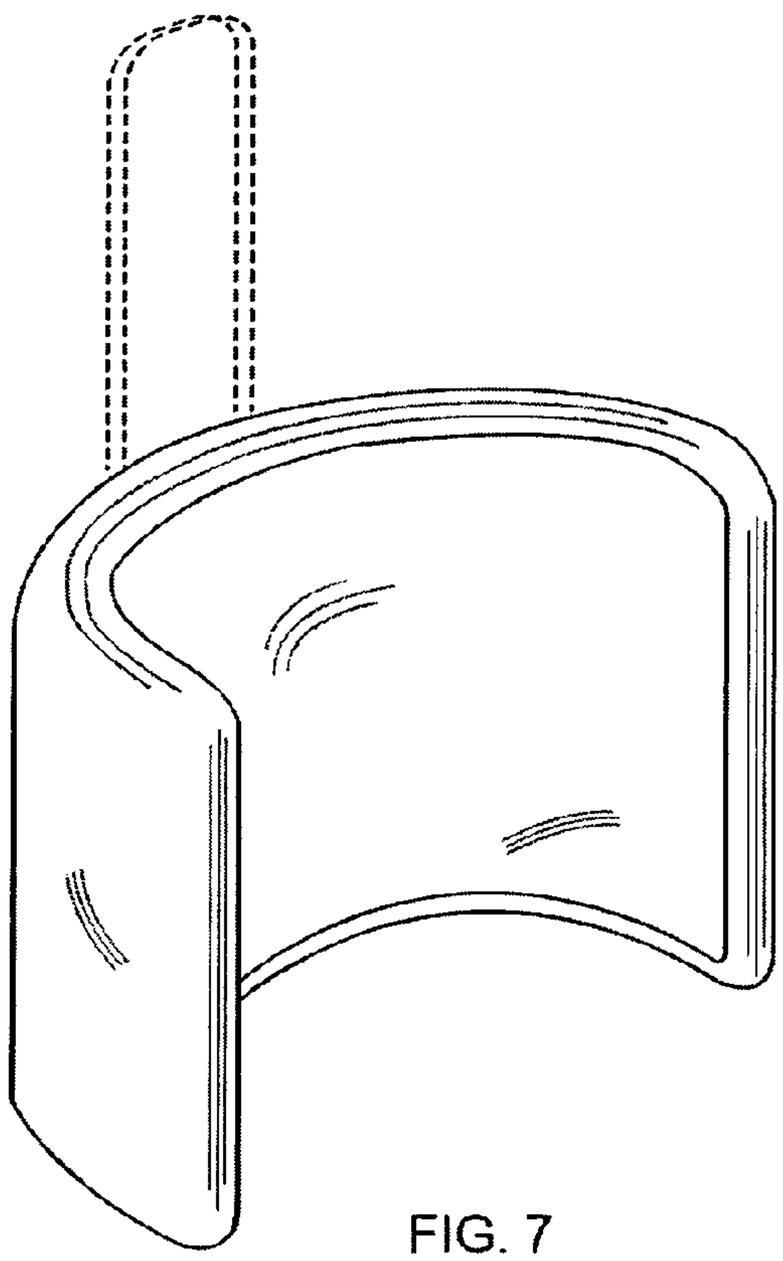

FIG. 7