US00D700987S

(12) United States Design Patent

Nepple et al.

(10) Patent No.: US D700,987 S
(45) Date of Patent: ** Mar. 11, 2014

(54) **TRAPEZOIDAL LUMINAIRE**

(71) Applicant: **Cooper Technologies Company**, Houston, TX (US)

(72) Inventors: **Jeffrey Brian Nepple**, Yorba Linda, CA (US); **Zachary Adam Ingalls**, Denver, CO (US); **Matthew A. Davis**, Orange, CA (US); **Dean Grierson**, Westminster, CO (US)

(73) Assignee: **Cooper Technologies Company**, Houston, TX (US)

(**) Term: **14 Years**

(21) Appl. No.: **29/450,587**

(22) Filed: **Mar. 19, 2013**

Related U.S. Application Data

(63) Continuation of application No. 29/400,535, filed on Aug. 30, 2011, now abandoned.

(51) **LOC (10) Cl.** **26-05**

(52) **U.S. Cl.**
USPC **D26/71**; D26/120

(58) **Field of Classification Search**
USPC D26/59, 71, 74, 76, 85, 87, 89, 90, 118, D26/120; D23/377, 379, 411; 362/147, 148, 362/365, 453–456, 479, 483, 488, 490
See application file for complete search history.

(56) **References Cited**

U.S. PATENT DOCUMENTS

142,473	A		9/1873	Hyatt	
145,185	A		12/1873	Hyatt	
145,208	A		12/1873	Hyatt	
D120,658	S		5/1940	Arenberg	
D120,772	S		5/1940	Arenberg	
D120,773	S		5/1940	Arenberg	
D129,828	S	*	10/1941	Cadwallader	D26/120
D134,830	S	*	1/1943	Cadwallader	D26/120
D147,577	S	*	9/1947	Cadwallader	D26/120
D164,065	S		7/1951	Rutledge	
D186,130	S	*	9/1959	Izzi et al.	D26/71
D196,670	S	*	10/1963	Kinnear et al.	D26/69

(Continued)

Primary Examiner — Clare E Heflin
(74) *Attorney, Agent, or Firm* — King & Spalding LLP

(57) **CLAIM**

The ornamental design for a trapezoidal luminaire, as shown and described.

DESCRIPTION

FIG. **1** is a perspective view of a trapezoidal luminaire, showing our new design;
FIG. **2** is a top plan view thereof;
FIG. **3** is a bottom plan view thereof;
FIG. **4** is a front elevation view thereof;
FIG. **5** is a right-side elevation view thereof;
FIG. **6** is a rear elevation view thereof;
FIG. **7** is a left-side elevation view thereof;
FIG. **8** is a perspective view of another new ornamental design for a trapezoidal luminaire;
FIG. **9** is a top plan view of the trapezoidal luminaire of FIG. **8**;
FIG. **10** is a bottom plan view of the trapezoidal luminaire of FIG. **8**;
FIG. **11** is a front elevation view of the trapezoidal luminaire of FIG. **8**;
FIG. **12** is a right-side elevation view of the trapezoidal luminaire of FIG. **8**;
FIG. **13** is a rear elevation view of the trapezoidal luminaire of FIG. **8**; and,
FIG. **14** is a left-side elevation view of the trapezoidal luminaire of FIG. **8**.
The broken lines shown represent unclaimed subject matter and form no part of the claimed design.

1 Claim, 10 Drawing Sheets

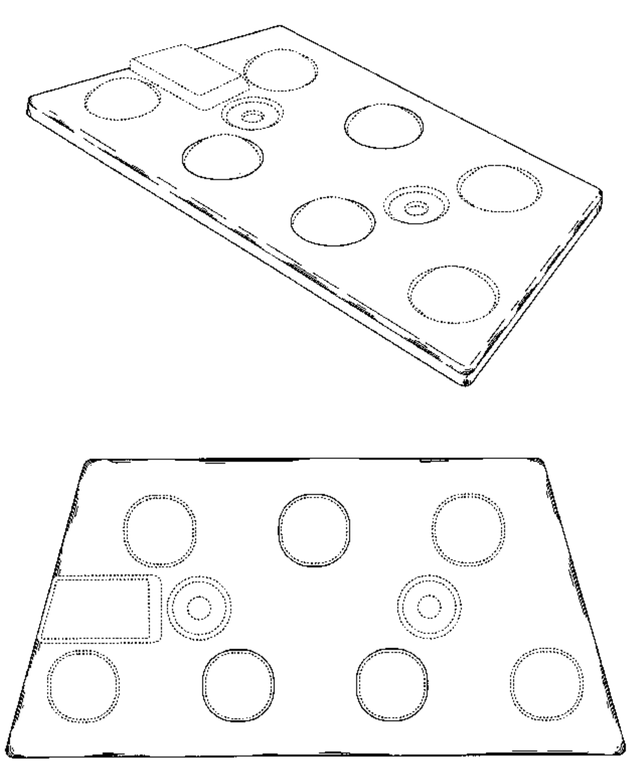

(56) **References Cited**

U.S. PATENT DOCUMENTS

D214,939	S	*	8/1969	Arrigoni	D26/120
D218,579	S	*	9/1970	Kahn	D10/114.1
D367,719	S	*	3/1996	Rasmusen	D26/28
6,199,993	B1		3/2001	Mou	
D455,223	S	*	4/2002	Crosby	D26/85
6,364,502	B1		4/2002	Johnson	
D456,932	S	*	5/2002	Crosby	D26/85
D468,854	S	*	1/2003	Chen	D26/93
D535,262	S		1/2007	Saito et al.	
D613,885	S		4/2010	Lodhie	
D626,275	S		10/2010	Sabernig	
D629,558	S	*	12/2010	Little et al.	D26/120
D631,187	S		1/2011	Blum et al.	
8,007,128	B2		8/2011	Wu et al.	
8,025,428	B2		9/2011	Duguay et al.	
D648,886	S		11/2011	Kong et al.	
D648,887	S		11/2011	Kong et al.	
D650,504	S		12/2011	Kim et al.	
D654,607	S		2/2012	Kim et al.	
D671,675	S		11/2012	Komarov et al.	
D675,774	S	*	2/2013	Stathis	D26/120
D677,831	S	*	3/2013	Lin et al.	D26/120

* cited by examiner

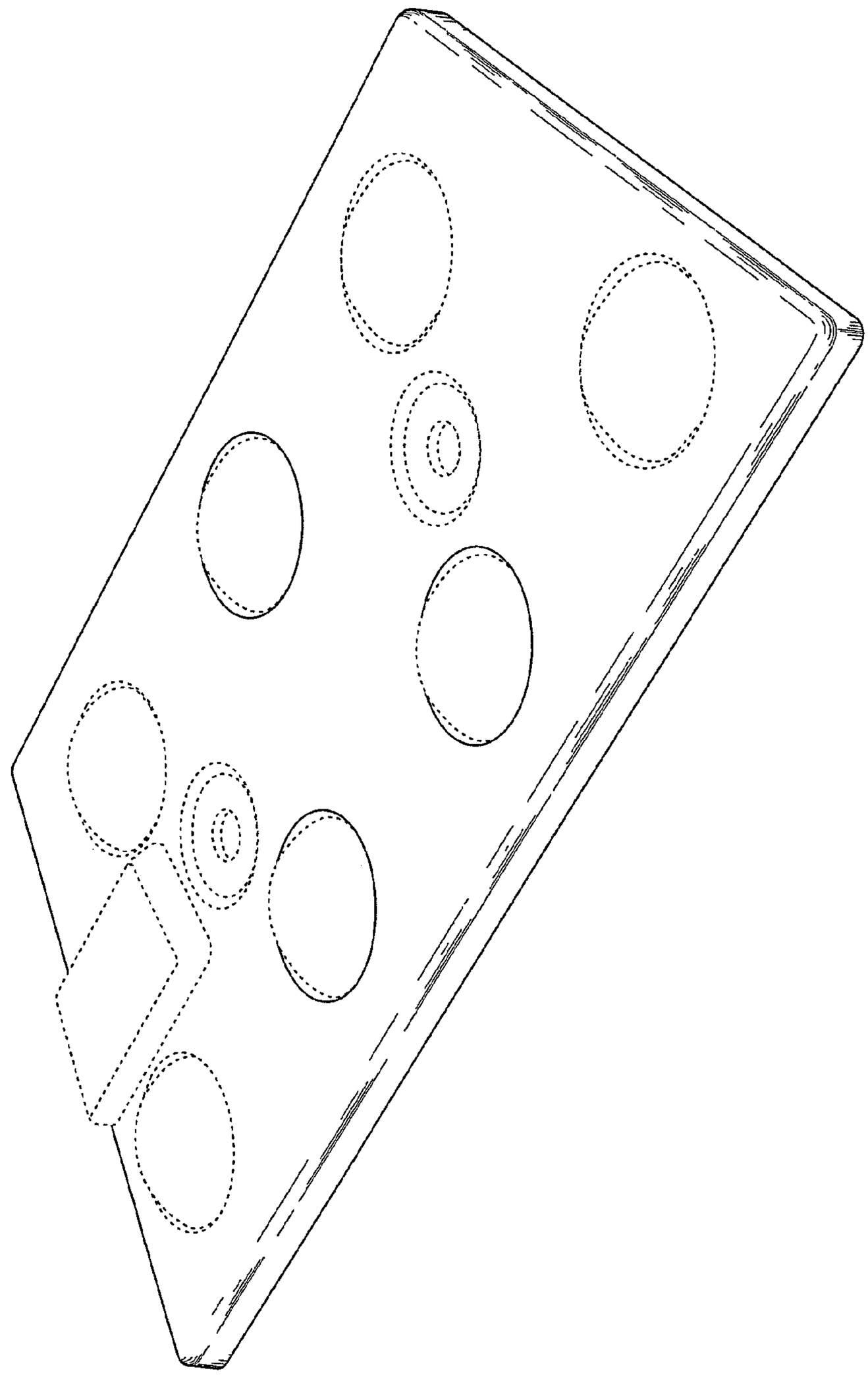

FIG. 1

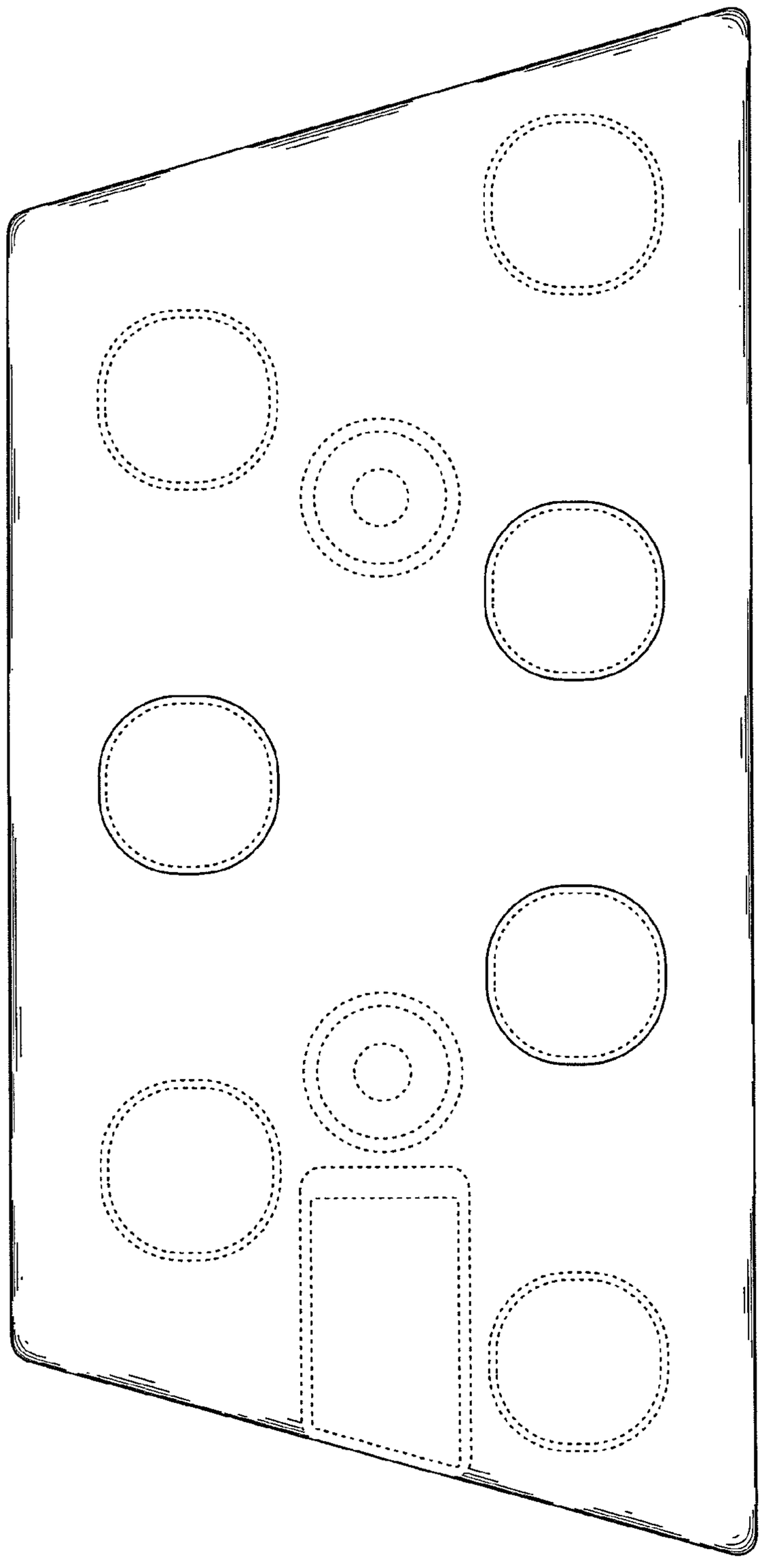

FIG. 2

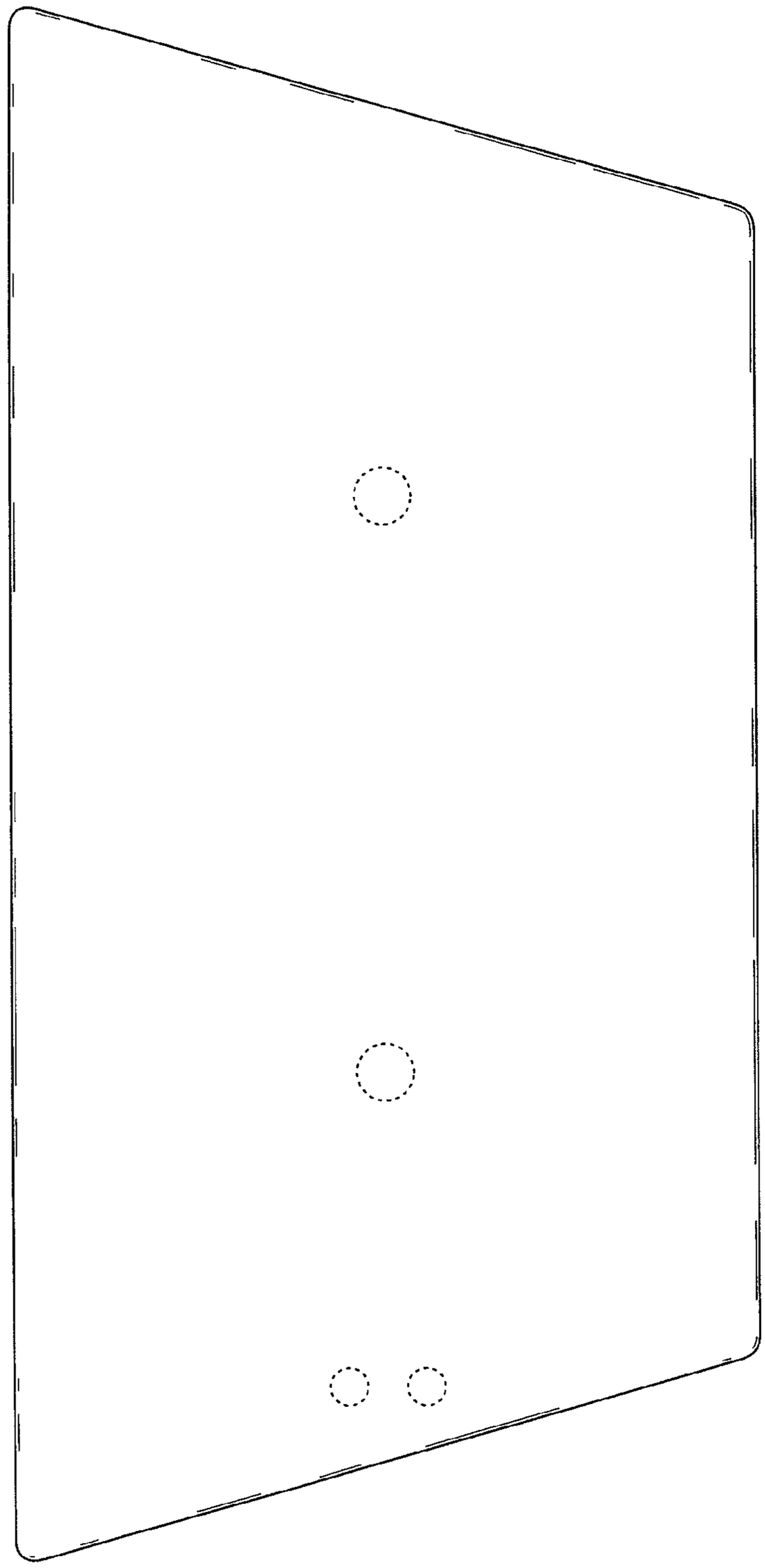

FIG. 3

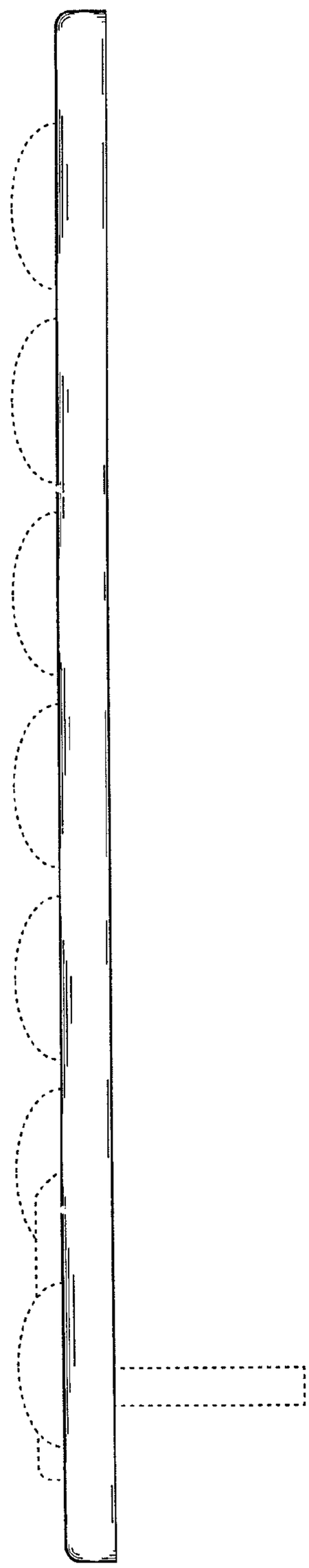

FIG. 4

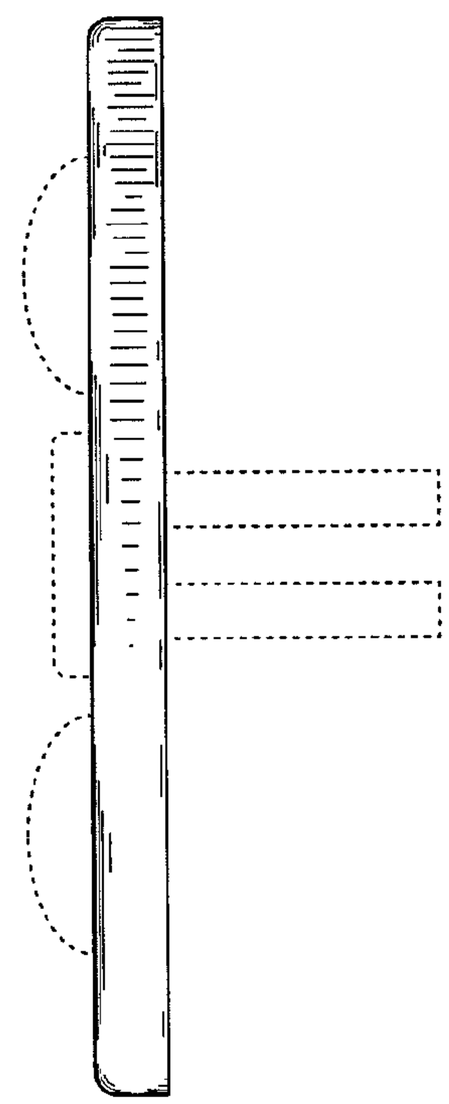

FIG. 5

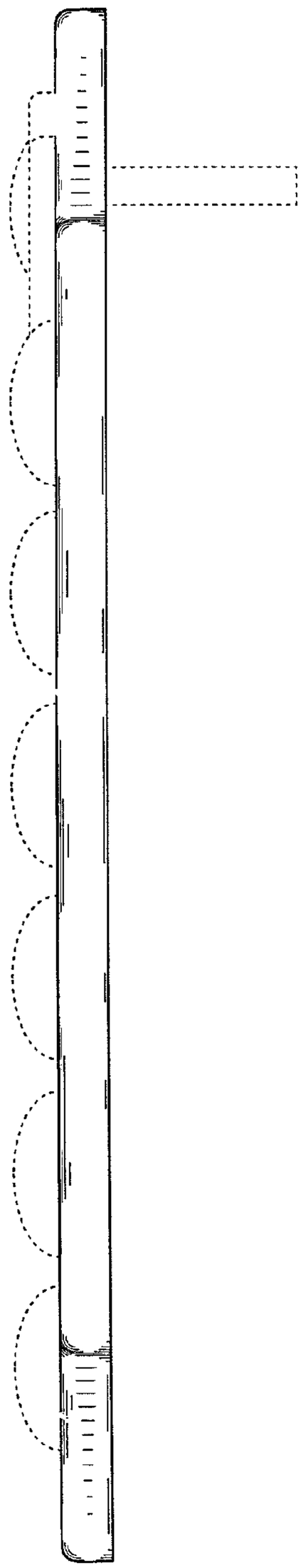

FIG. 6

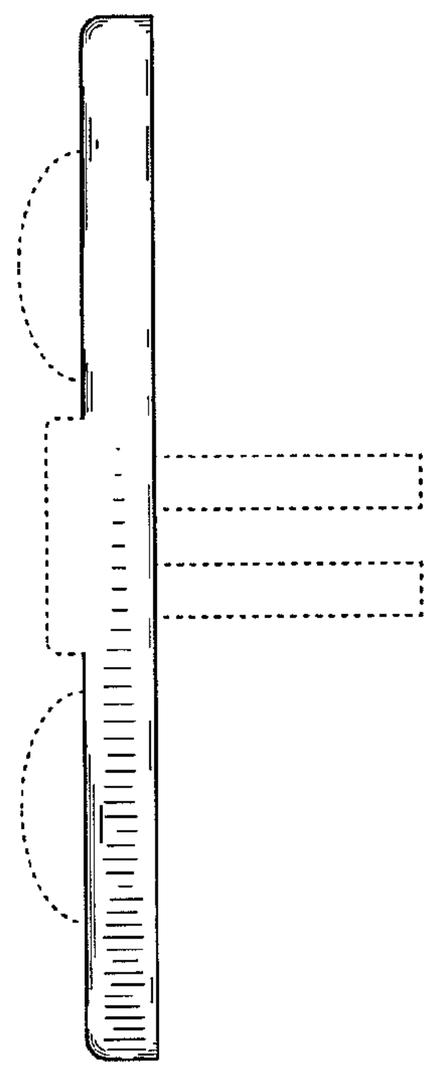

FIG. 7

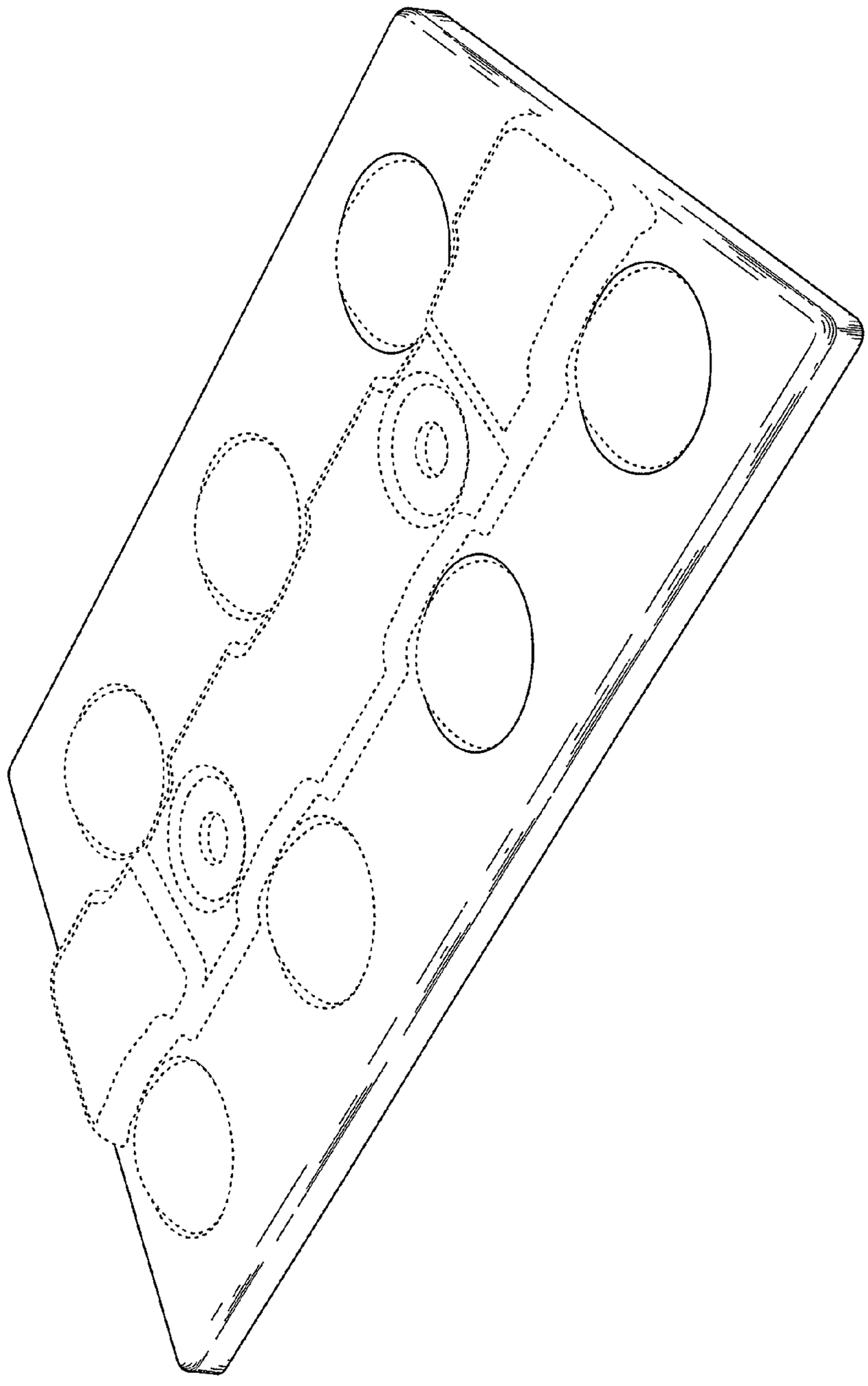

FIG. 8

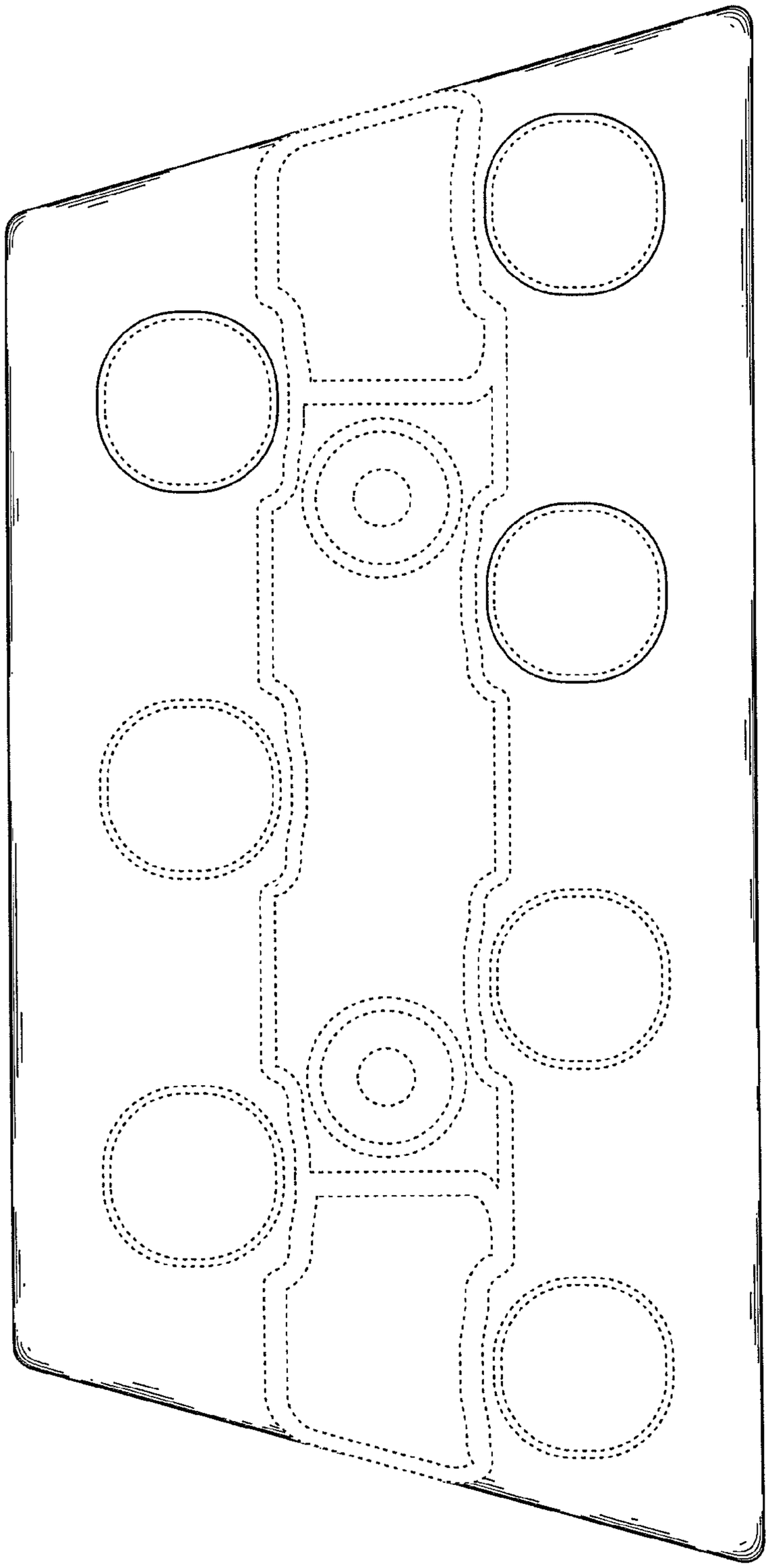

FIG. 9

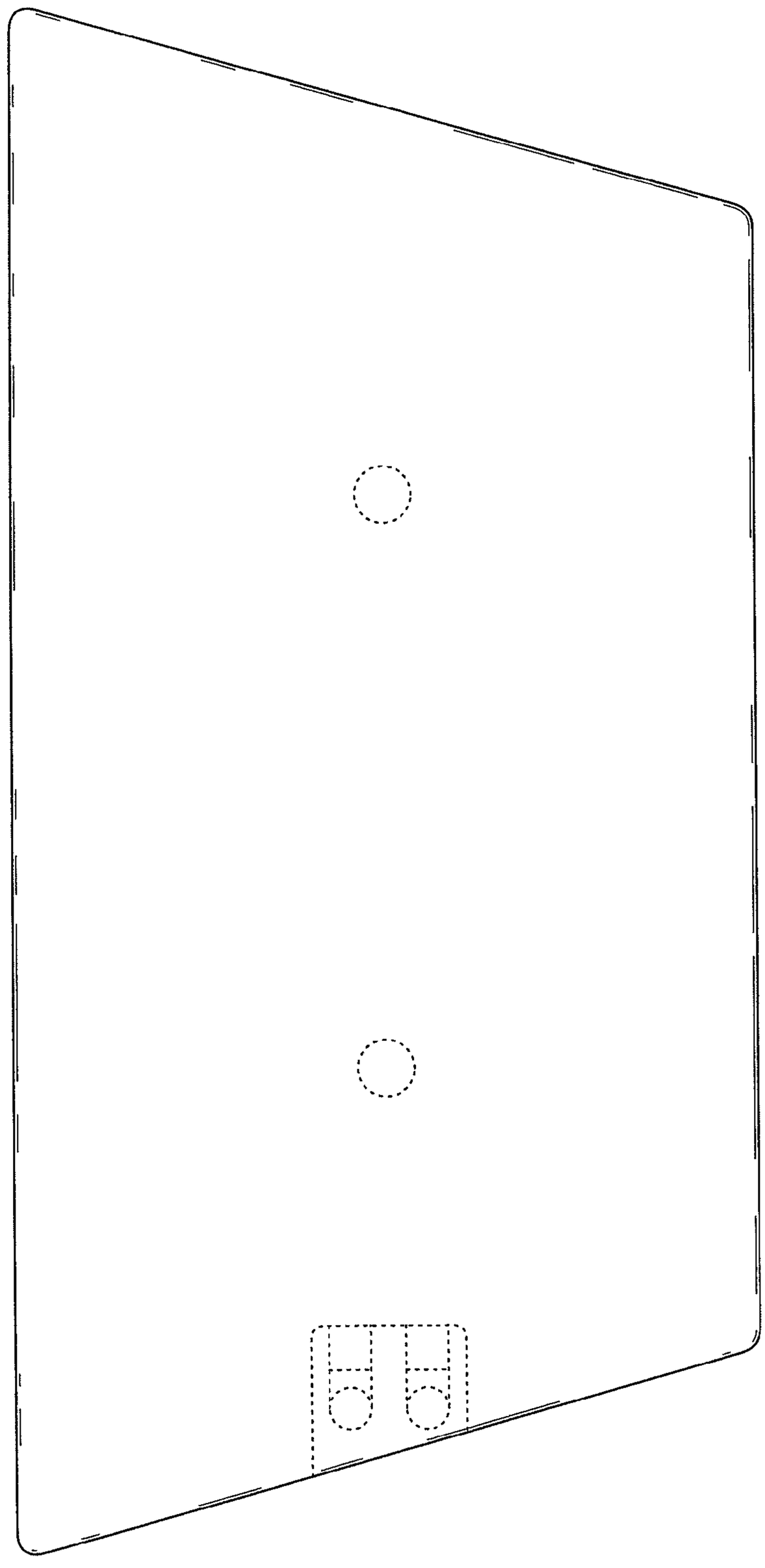

FIG. 10

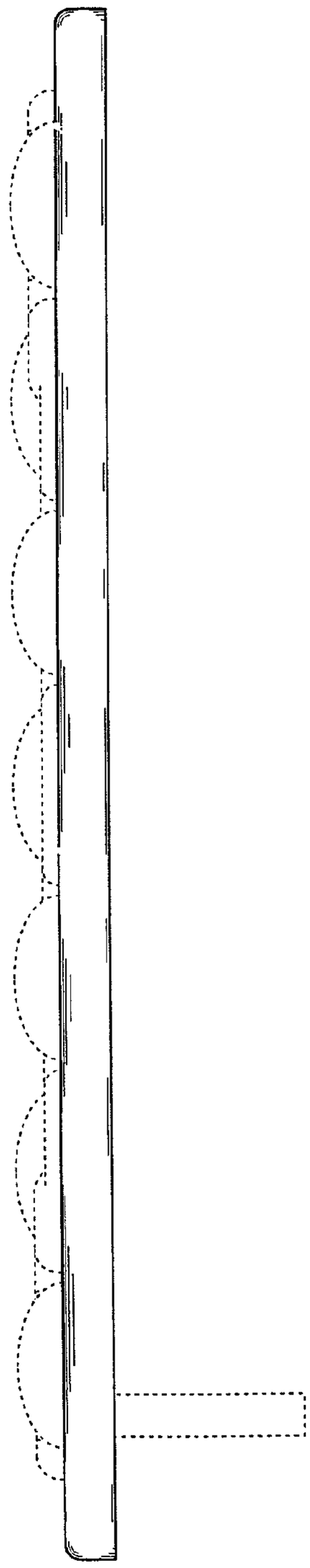

FIG. 11

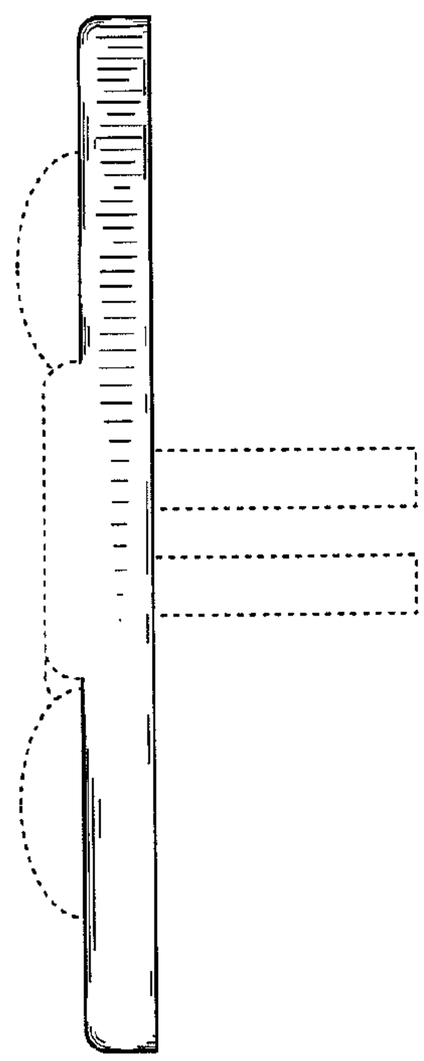

FIG. 12

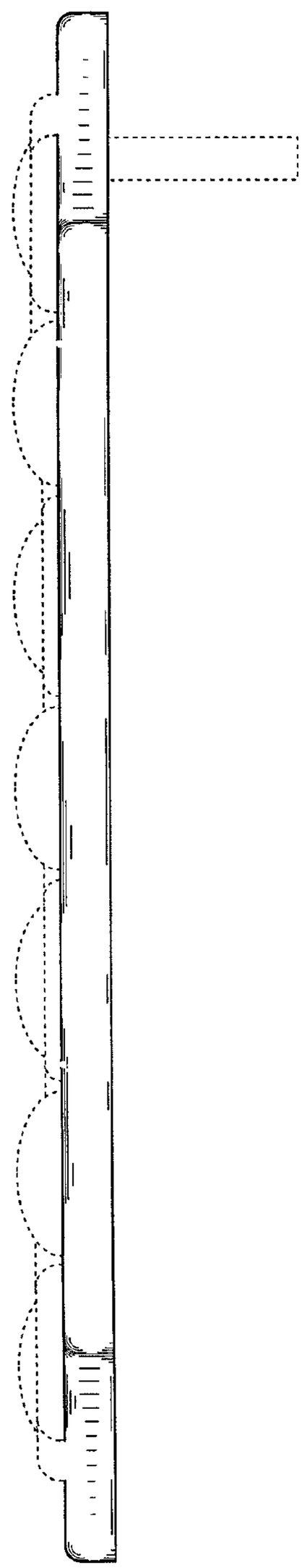

FIG. 13

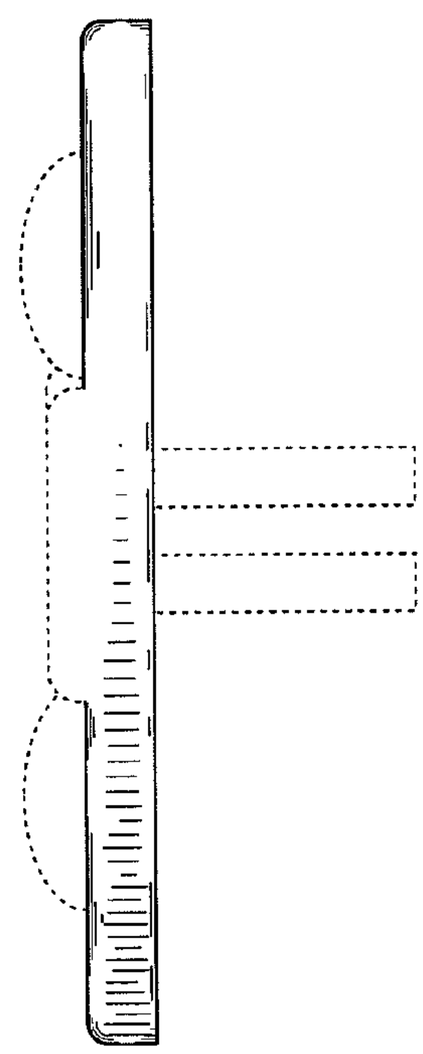

FIG. 14