US00D699904S

(12) United States Design Patent
Eng

(10) Patent No.: US D699,904 S
(45) Date of Patent: ** Feb. 18, 2014

(54) **DISHWASHER DOOR**

(71) Applicant: **BSH Home Appliances Corporation**, Irvine, CA (US)

(72) Inventor: **Lindsay Eng**, Long Beach, CA (US)

(73) Assignee: **BSH Home Appliances Corporation**, Irvine, CA (US)

(**) Term: **14 Years**

(21) Appl. No.: **29/459,096**

(22) Filed: **Jun. 26, 2013**

Related U.S. Application Data

(62) Division of application No. 29/428,560, filed on Aug. 1, 2012, now Pat. No. Des. 689,248, which is a division of application No. 29/418,058, filed on Apr. 12, 2012, now Pat. No. Des. 670,457.

(51) **LOC (10) Cl.** **15-05**

(52) **U.S. Cl.**
USPC **D32/3**

(58) **Field of Classification Search**
USPC ..... D32/1–3, 25, 28; 312/31, 109, 228; 134/56 D, 57 D, 58 D, 58 DL, 201; D7/340, 348–350, 405
See application file for complete search history.

(56) **References Cited**

U.S. PATENT DOCUMENTS

D424,257 S * 5/2000 Umeda et al. D32/2
6,893,061 B2 * 5/2005 Miller et al. 292/303
(Continued)

Primary Examiner — T. Chase Nelson
Assistant Examiner — Kathleen M Sims
(74) *Attorney, Agent, or Firm* — James E. Howard; Andre Pallapies

(57) **CLAIM**

The ornamental design for a dishwasher door, as shown and described.

DESCRIPTION

FIG. **1** is a front perspective view, from the top, of a dishwasher door according to a first embodiment showing my new ornamental design;
FIG. **2** is a front view thereof;
FIG. **3** is a cross section along line **3-3** of FIG. **2**;
FIG. **4** is a cross section along line **4-4** of FIG. **2**;
FIG. **5** is a top view thereof;
FIG. **6** is a left side view thereof, with the right side view thereof being a mirror image thereof;
FIG. **7** is a front perspective view thereof taken from the bottom;
FIG. **8** is another front perspective view thereof taken from the bottom;
FIG. **9** is a front perspective view, from the top, of a dishwasher door according to a second embodiment showing my new ornamental design;
FIG. **10** is a front view thereof;
FIG. **11** is a cross section along line **11-11** of FIG. **10**;
FIG. **12** is a cross section along line **12-12** of FIG. **10**;
FIG. **13** is a top view thereof;
FIG. **14** is a left side view thereof, with the right hand side view thereof being a mirror image thereof;
FIG. **15** is a front perspective view thereof from the bottom;
FIG. **16** is another front perspective view thereof from the bottom;
FIG. **17** is a front perspective view, from the top, of a dishwasher door according to a third embodiment showing my new ornamental design;
FIG. **18** is a front view thereof;
FIG. **19** is a cross section along line **19-19** of FIG. **18**;
FIG. **20** is a cross section along line **20-20** of FIG. **18**;
FIG. **21** is a top view thereof;
FIG. **22** is a left side view thereof, with the right side view thereof being a mirror image thereof;
FIG. **23** is a front perspective view thereof from the bottom; and,
FIG. **24** is another front perspective view thereof from the bottom.
The broken lines of the dishwasher and/or components thereof show surrounding structure or environment and do not form part of the claimed design. The bottom and rear parts of the dishwasher door are unornamented and form no part of the claimed design.

1 Claim, 18 Drawing Sheets

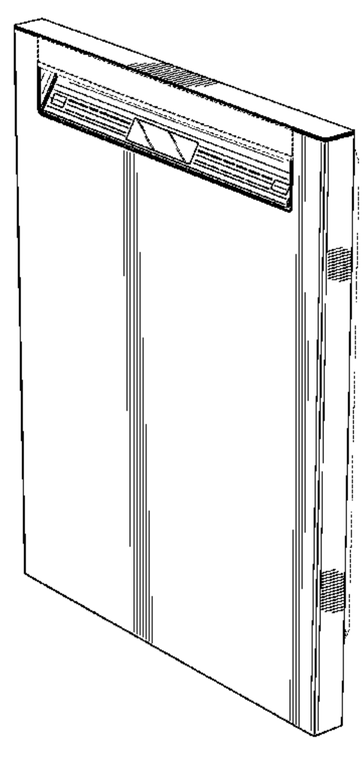

(56) **References Cited**

U.S. PATENT DOCUMENTS

7,216,944	B2 *	5/2007	Oyler et al.	312/311
D627,937	S *	11/2010	Kim	D32/2
D668,404	S *	10/2012	Eng et al.	D32/3
D672,101	S *	12/2012	Eng et al.	D32/3
D673,742	S *	1/2013	Eng et al.	D32/2
D684,735	S *	6/2013	Eng et al.	D32/3
D684,736	S *	6/2013	Eng et al.	D32/3
D685,149	S *	6/2013	Eng et al.	D32/3
D689,248	S *	9/2013	Eng	D32/3
2003/0030288	A1 *	2/2003	Miller et al.	292/303

* cited by examiner

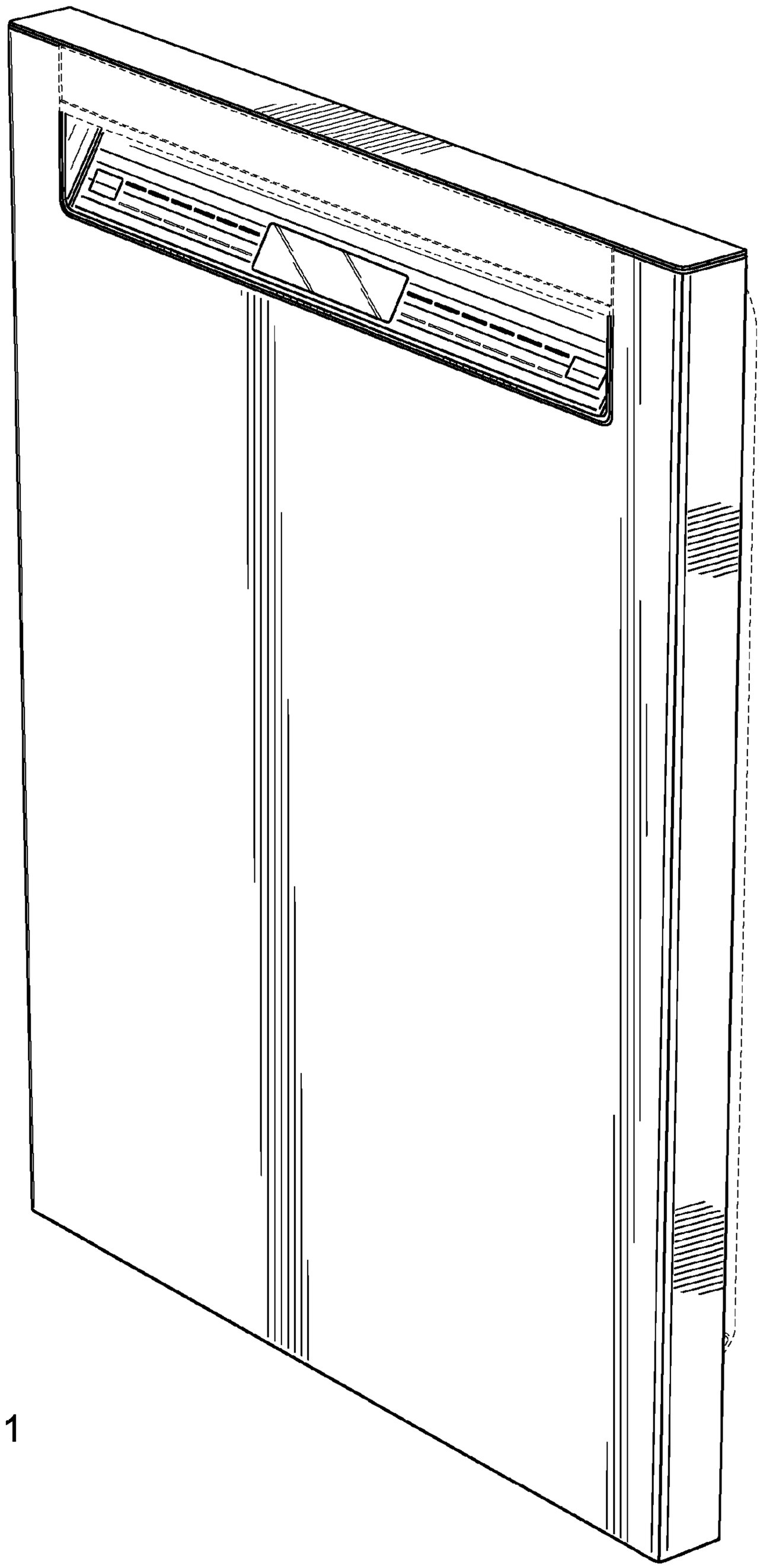

Fig. 1

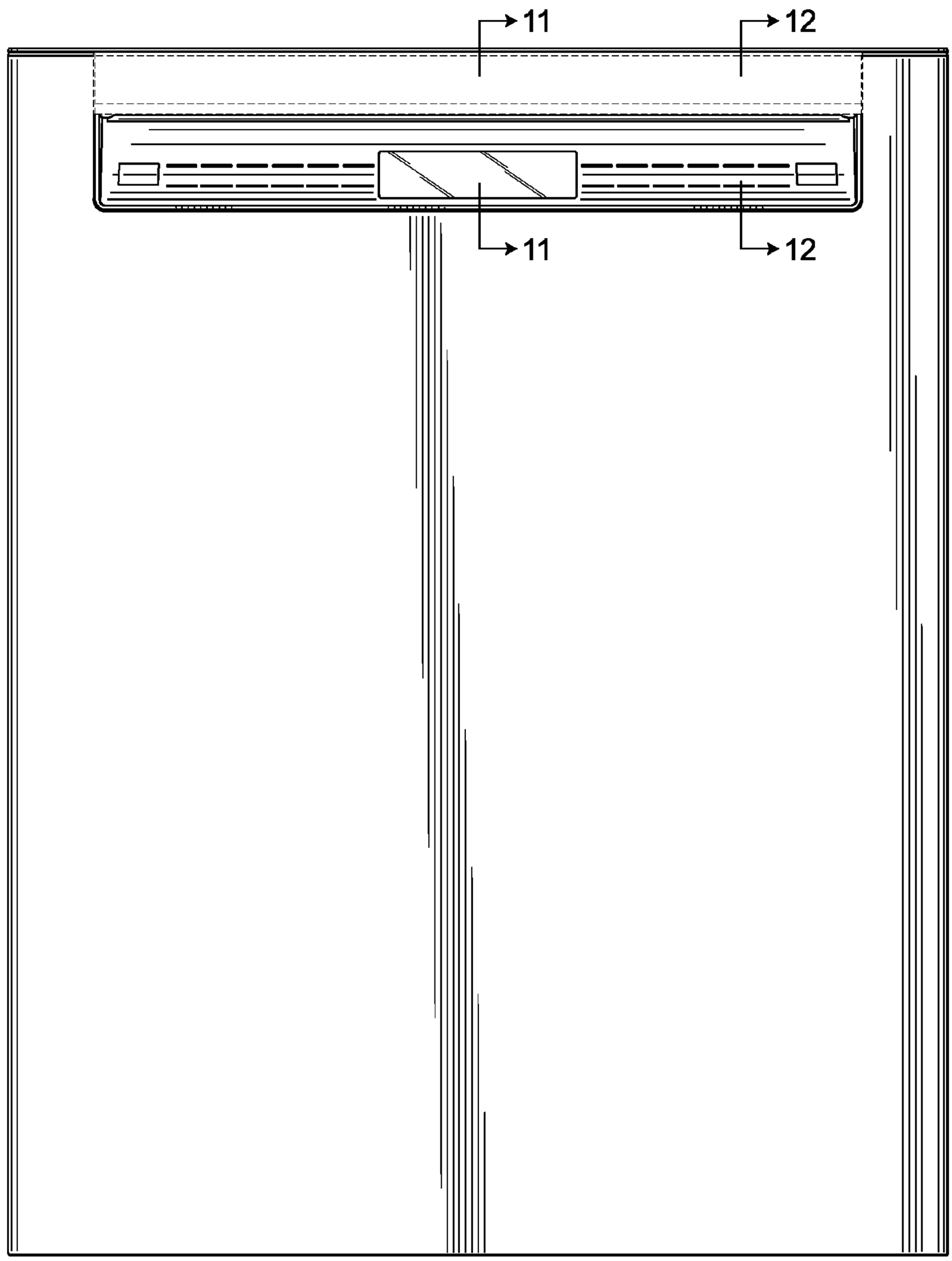

Fig. 2

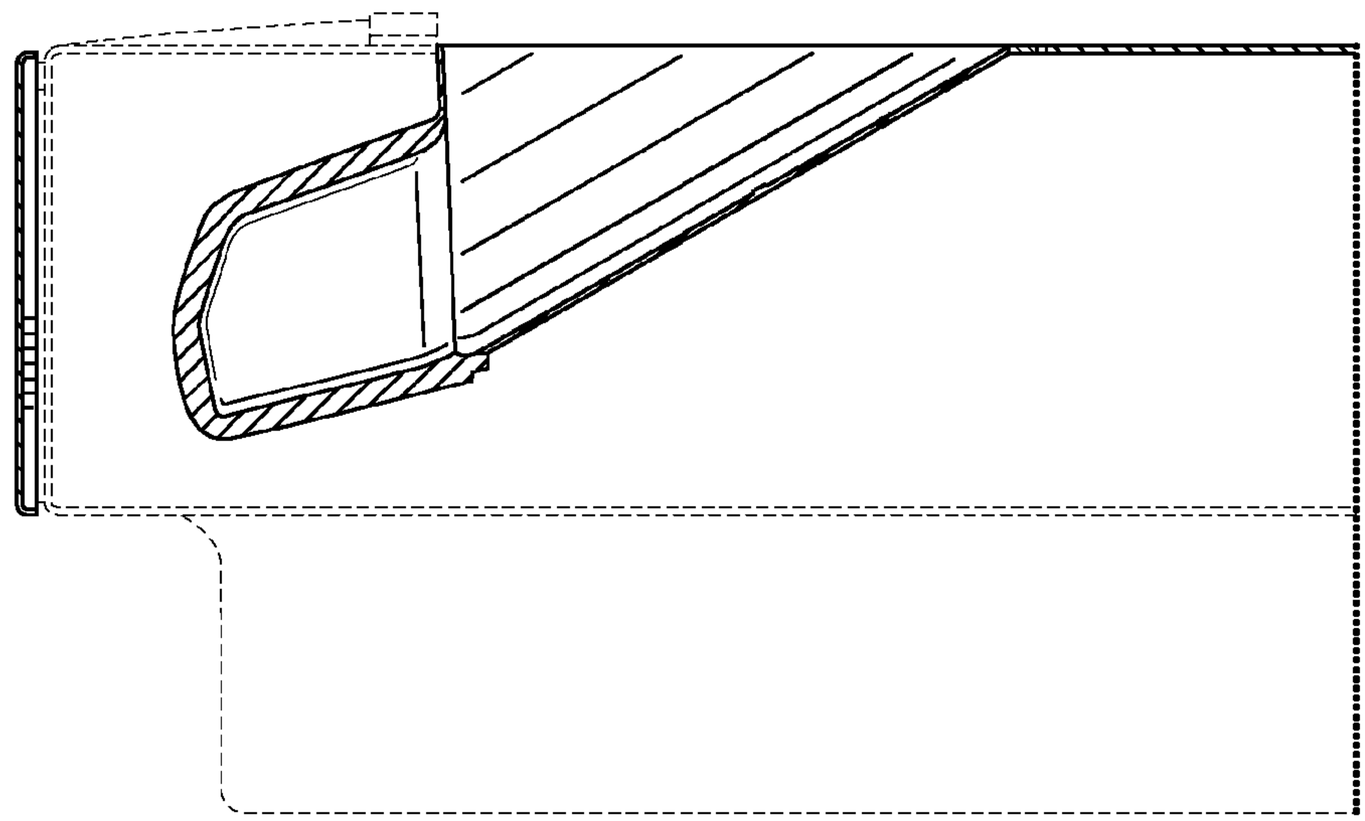

Fig. 4

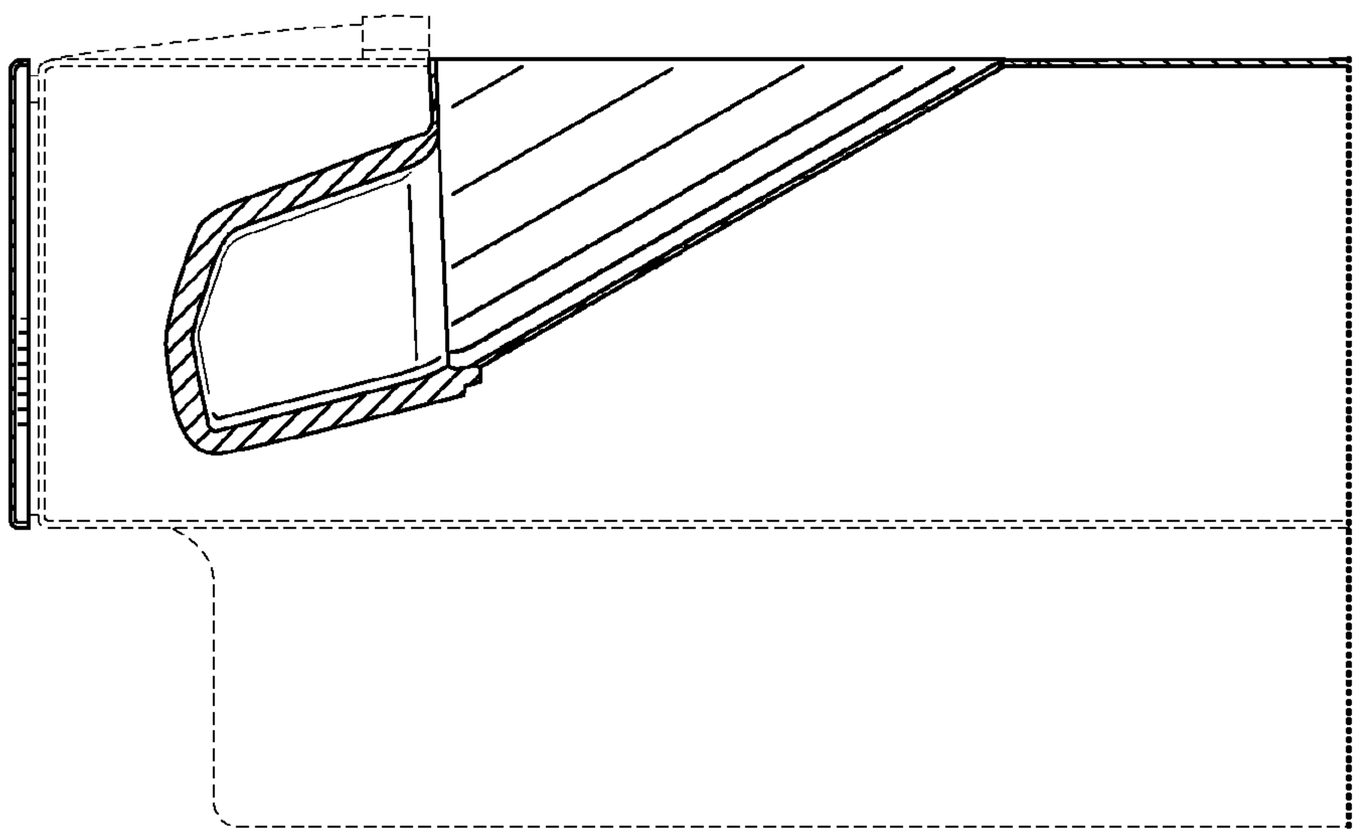

Fig. 3

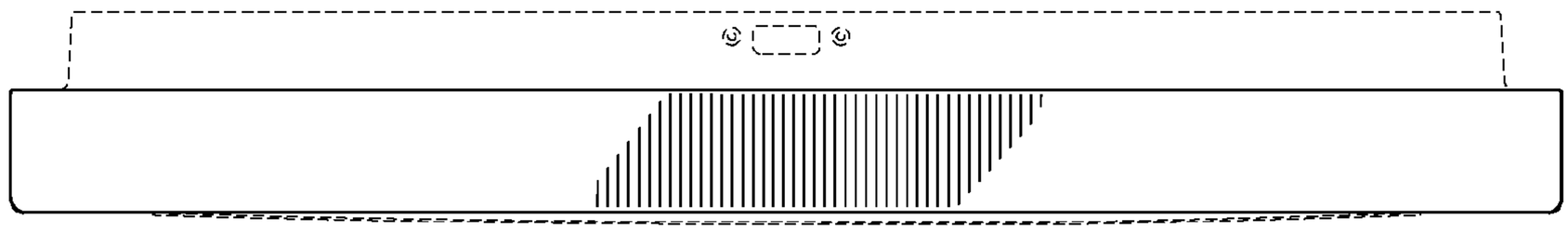

Fig. 5

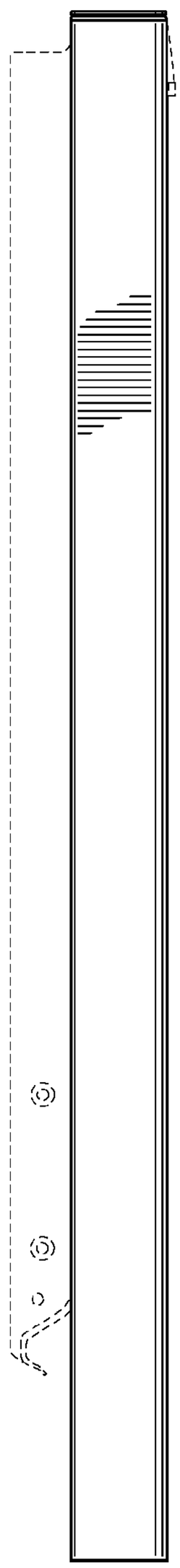

Fig. 6

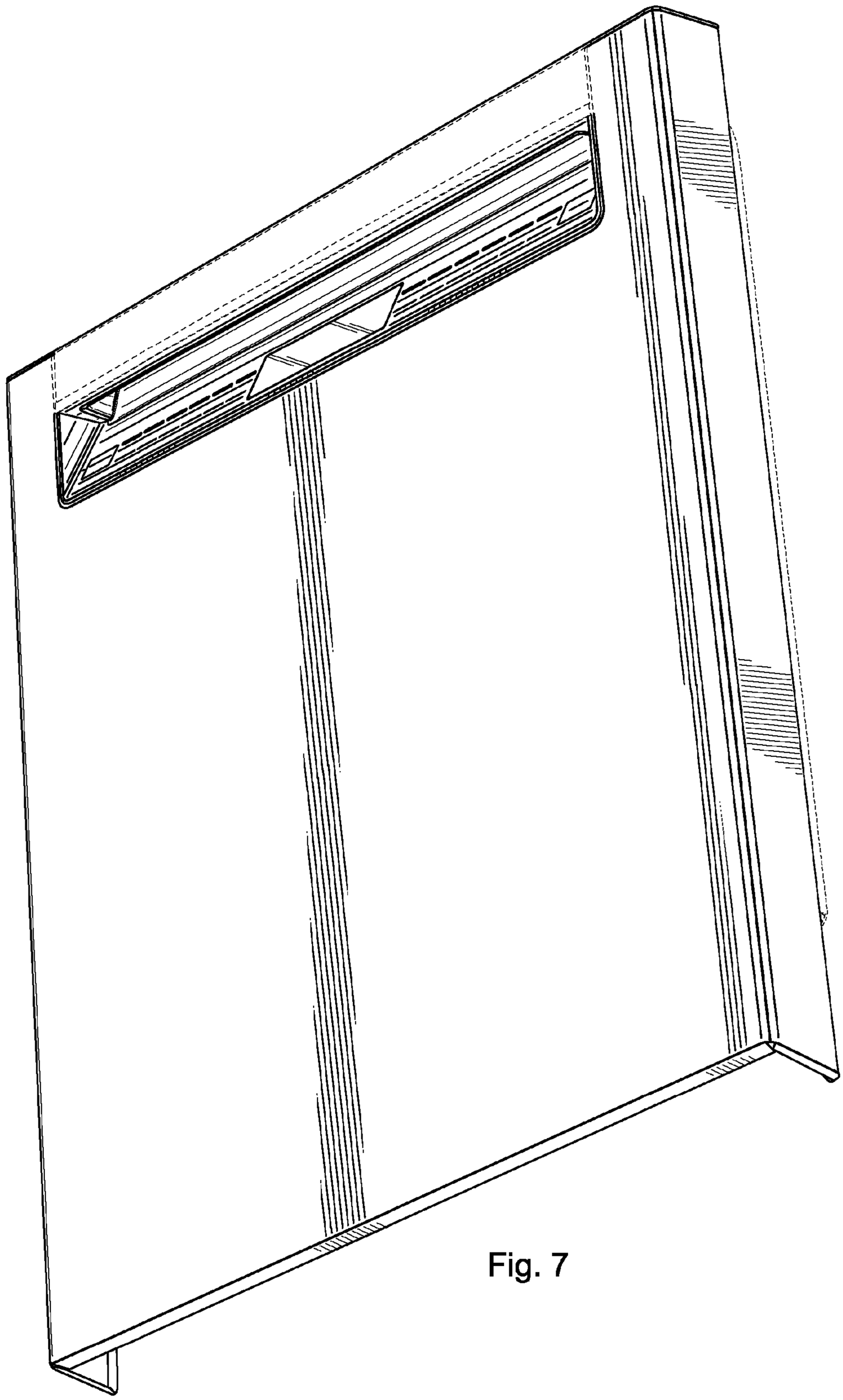

Fig. 7

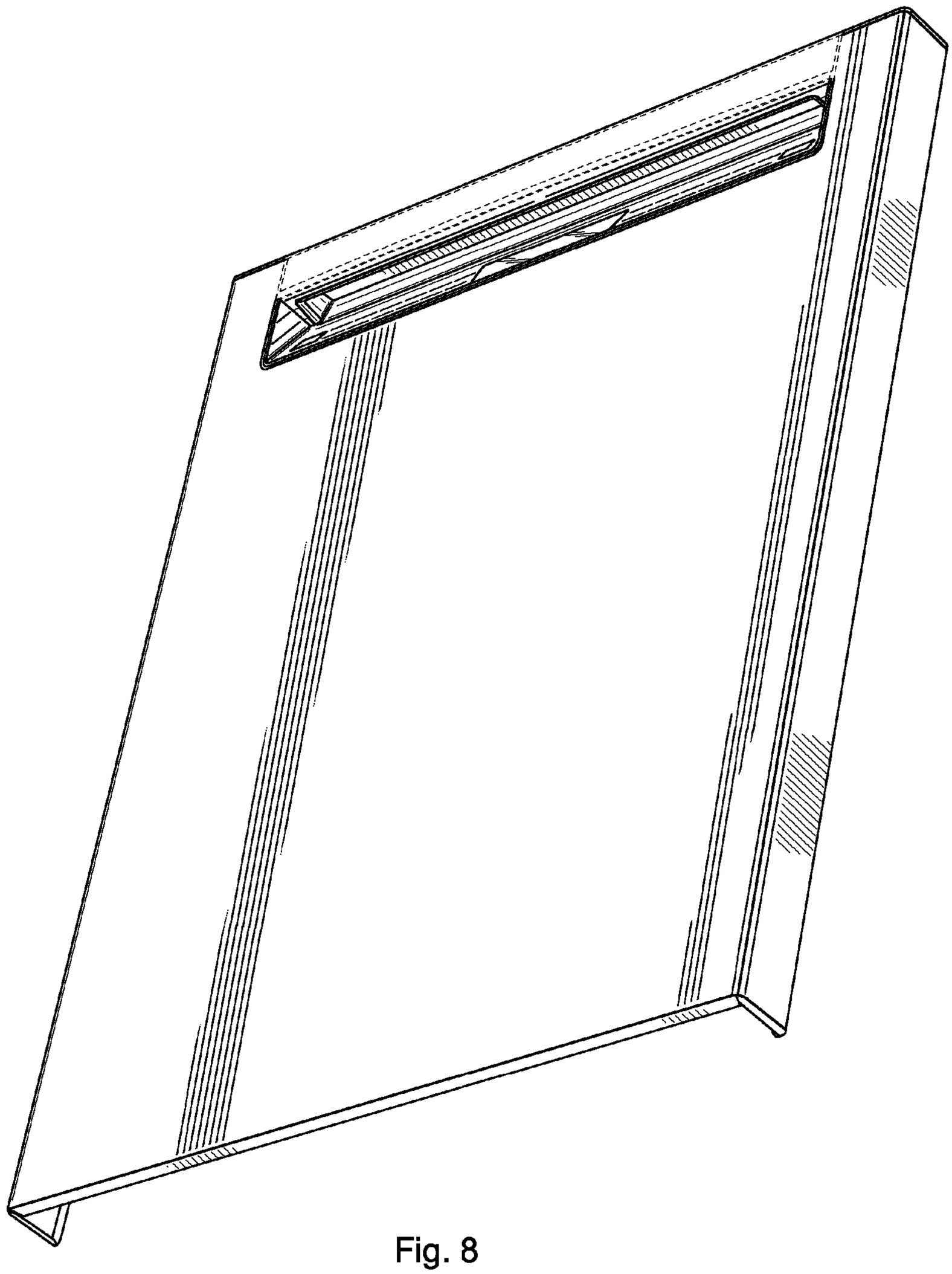

Fig. 8

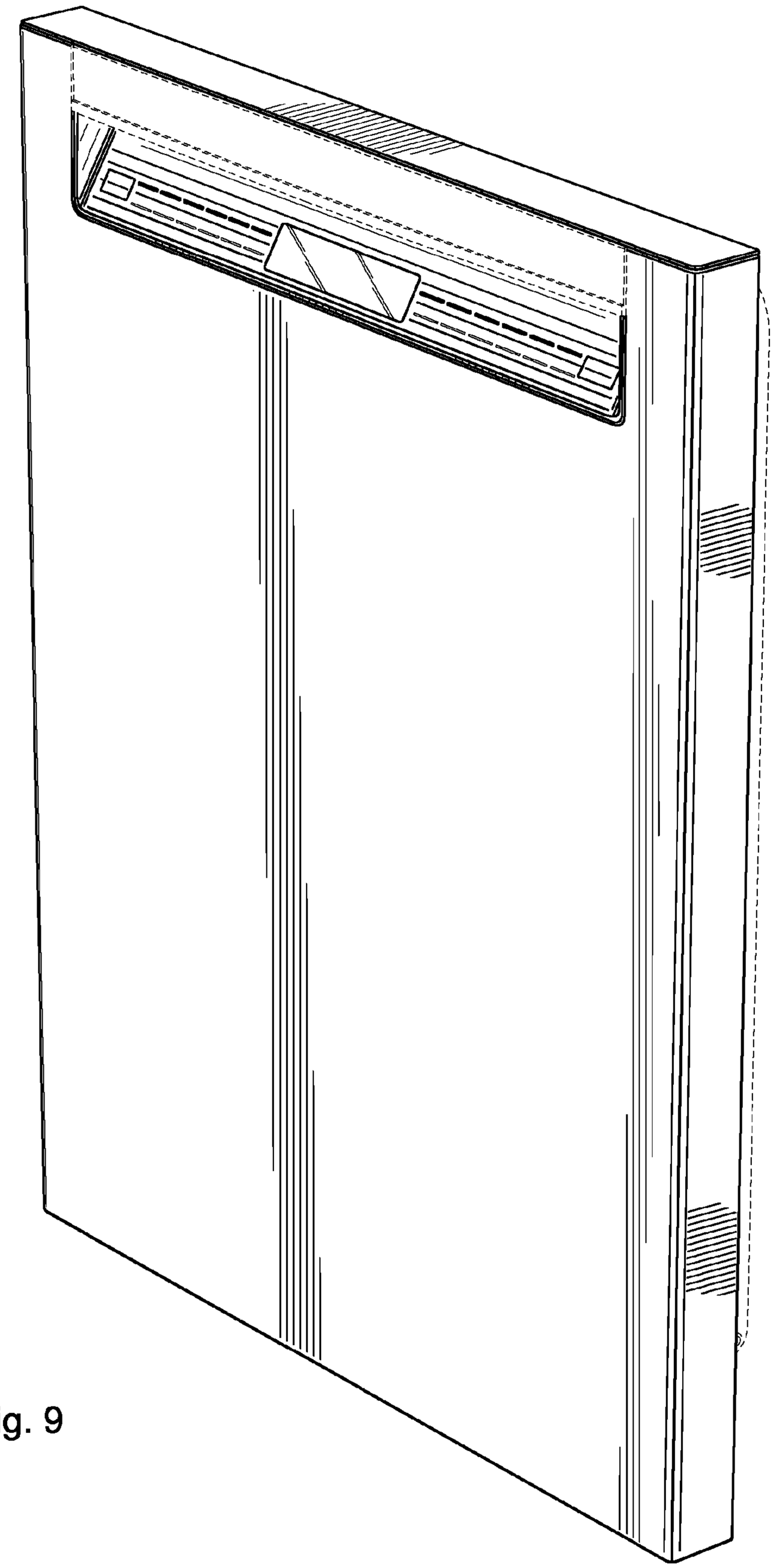

Fig. 9

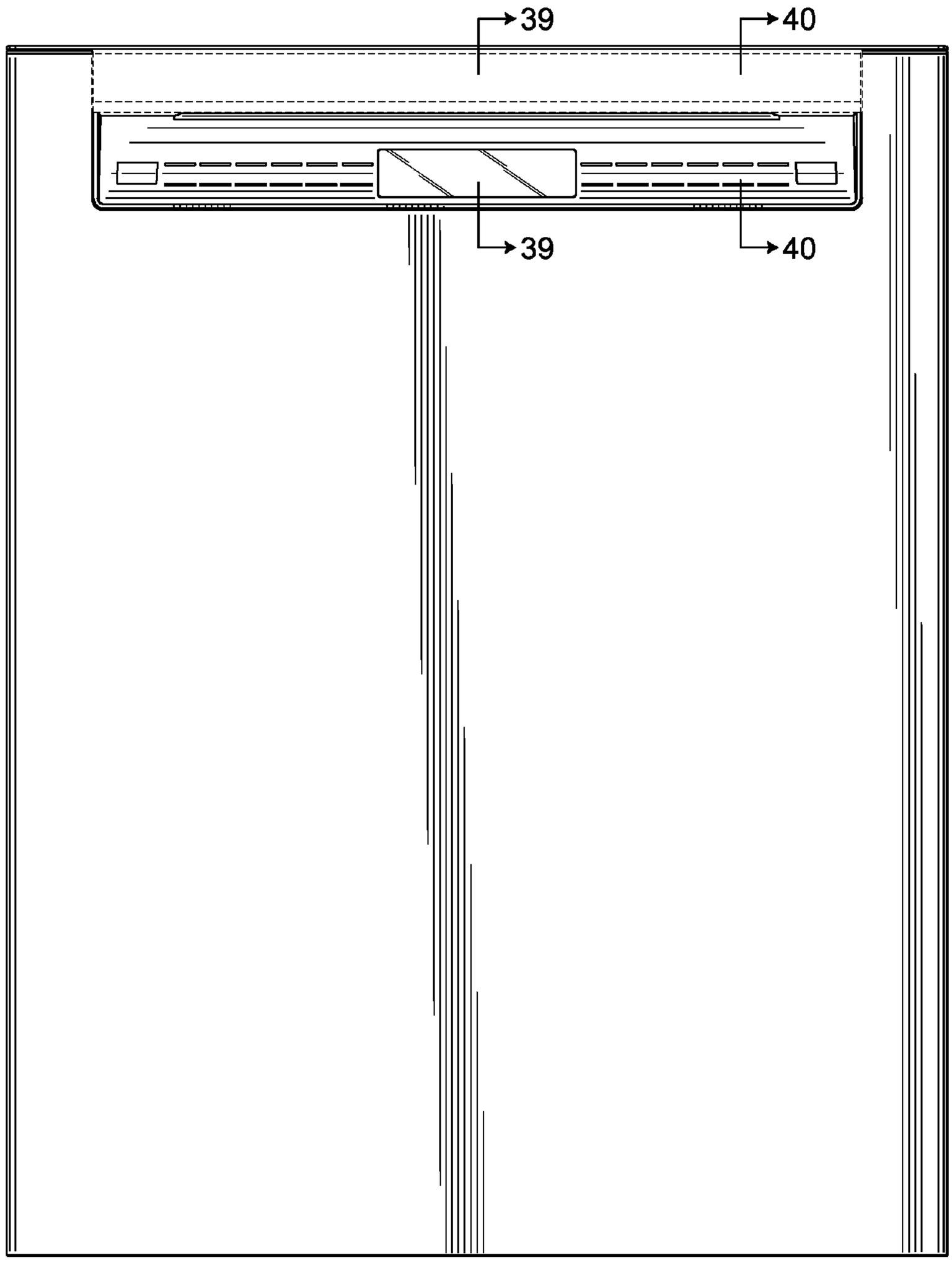

Fig. 10

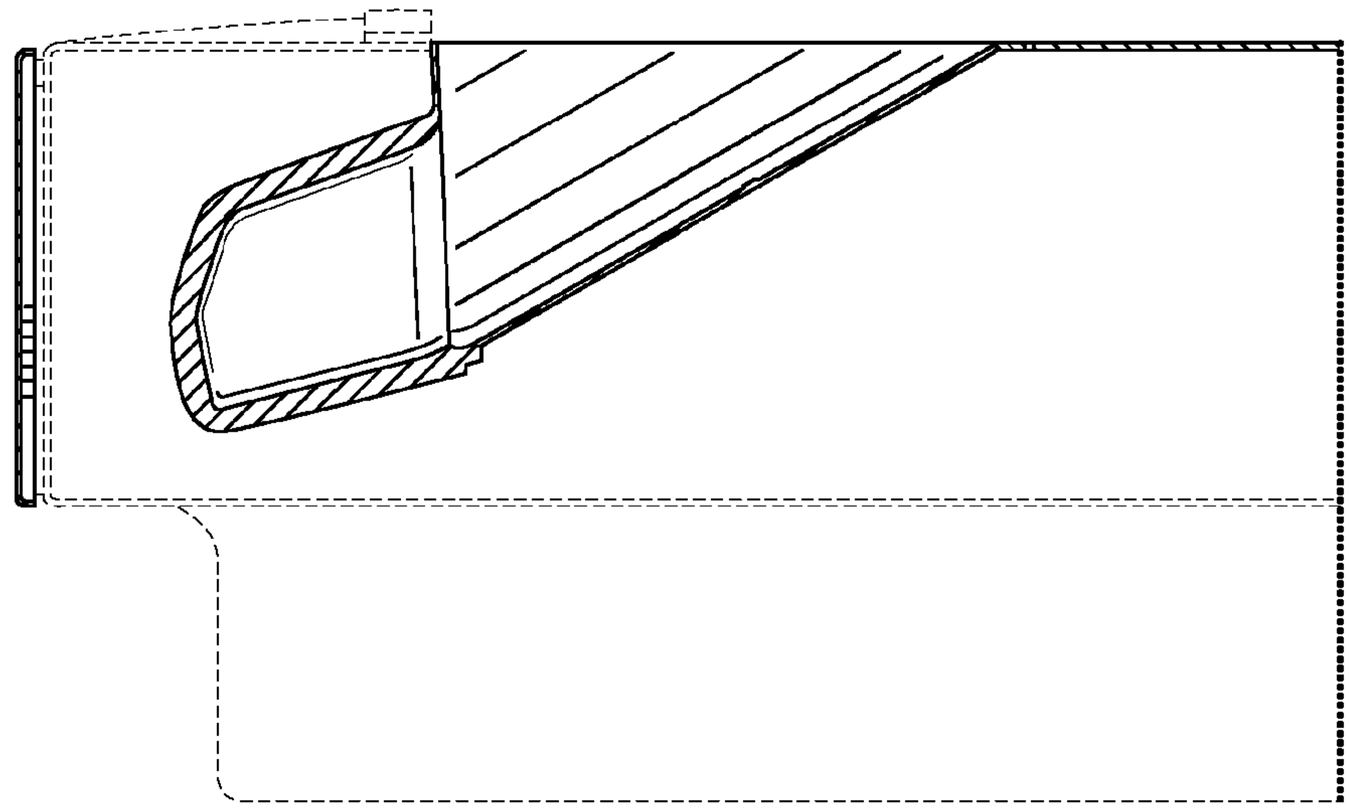

Fig. 12

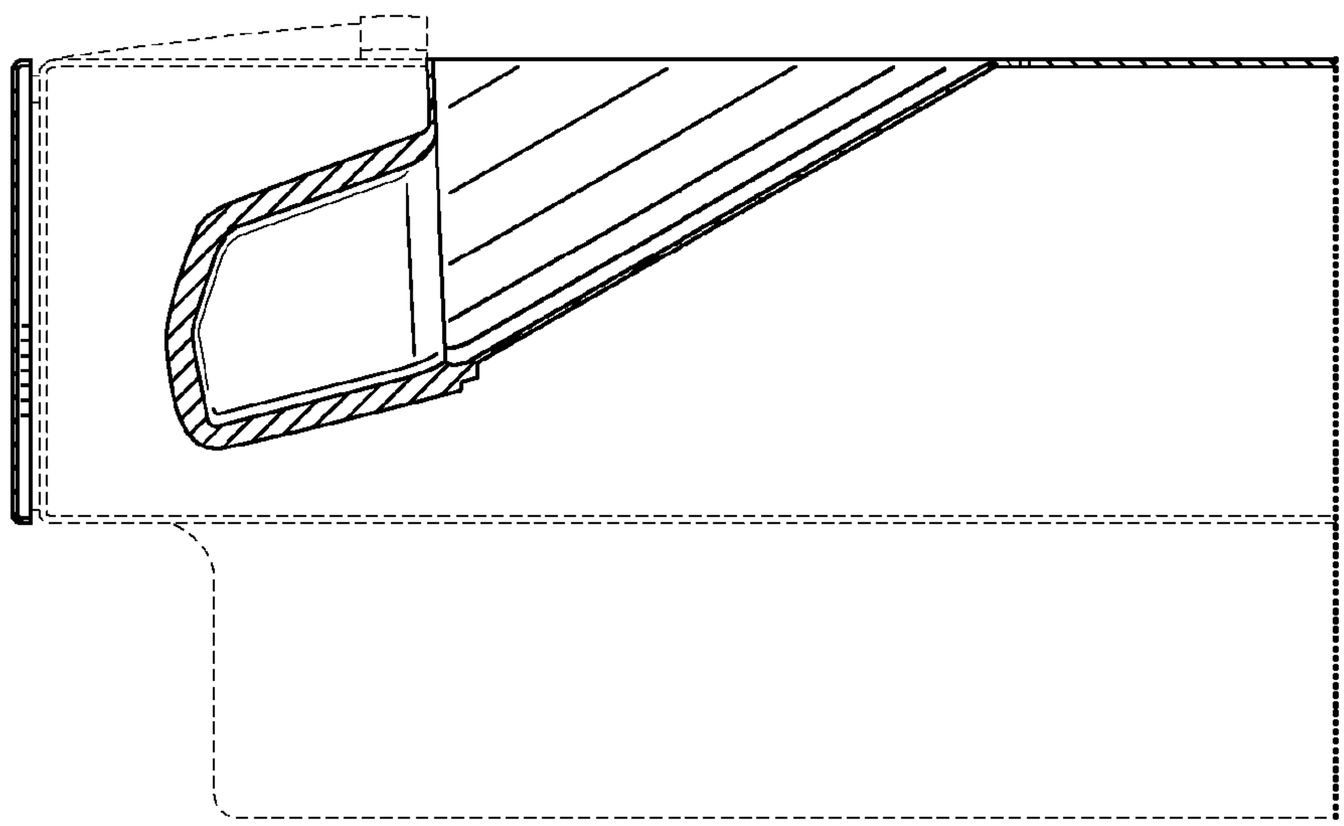

Fig. 11

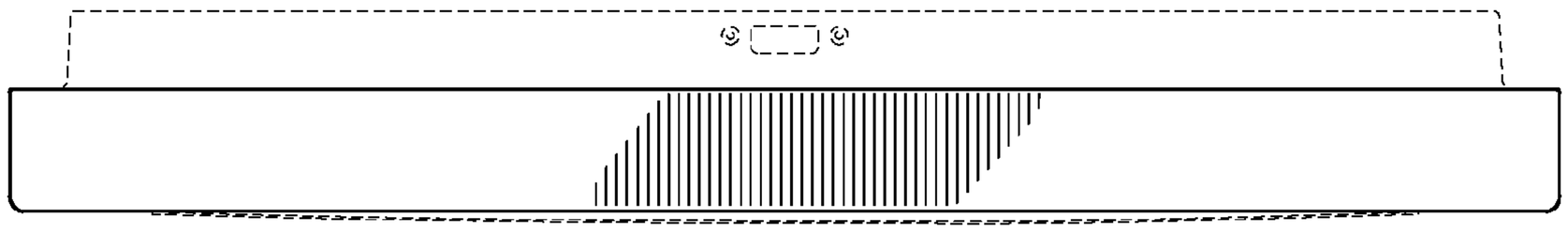

Fig. 13

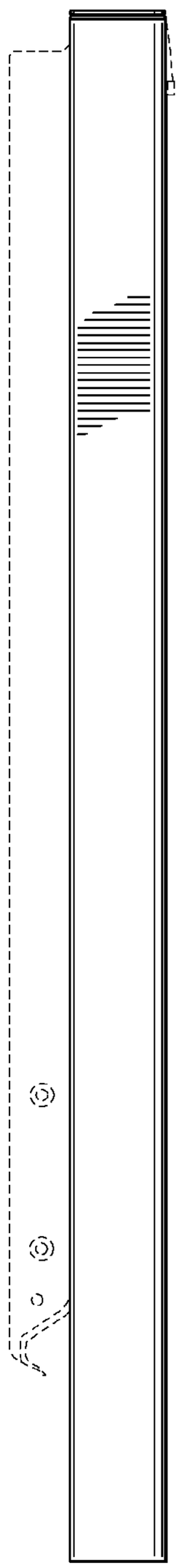

Fig. 14

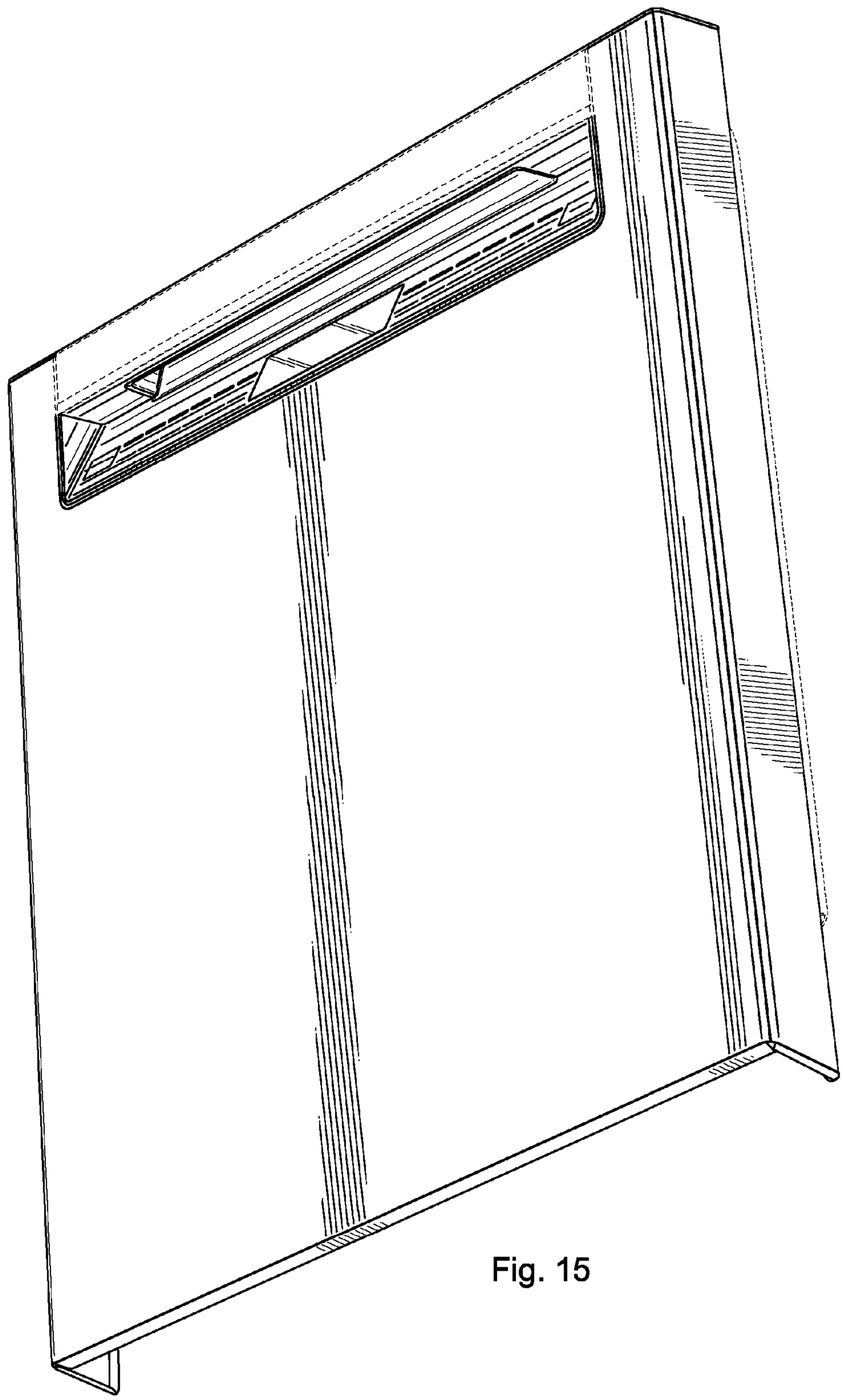

Fig. 15

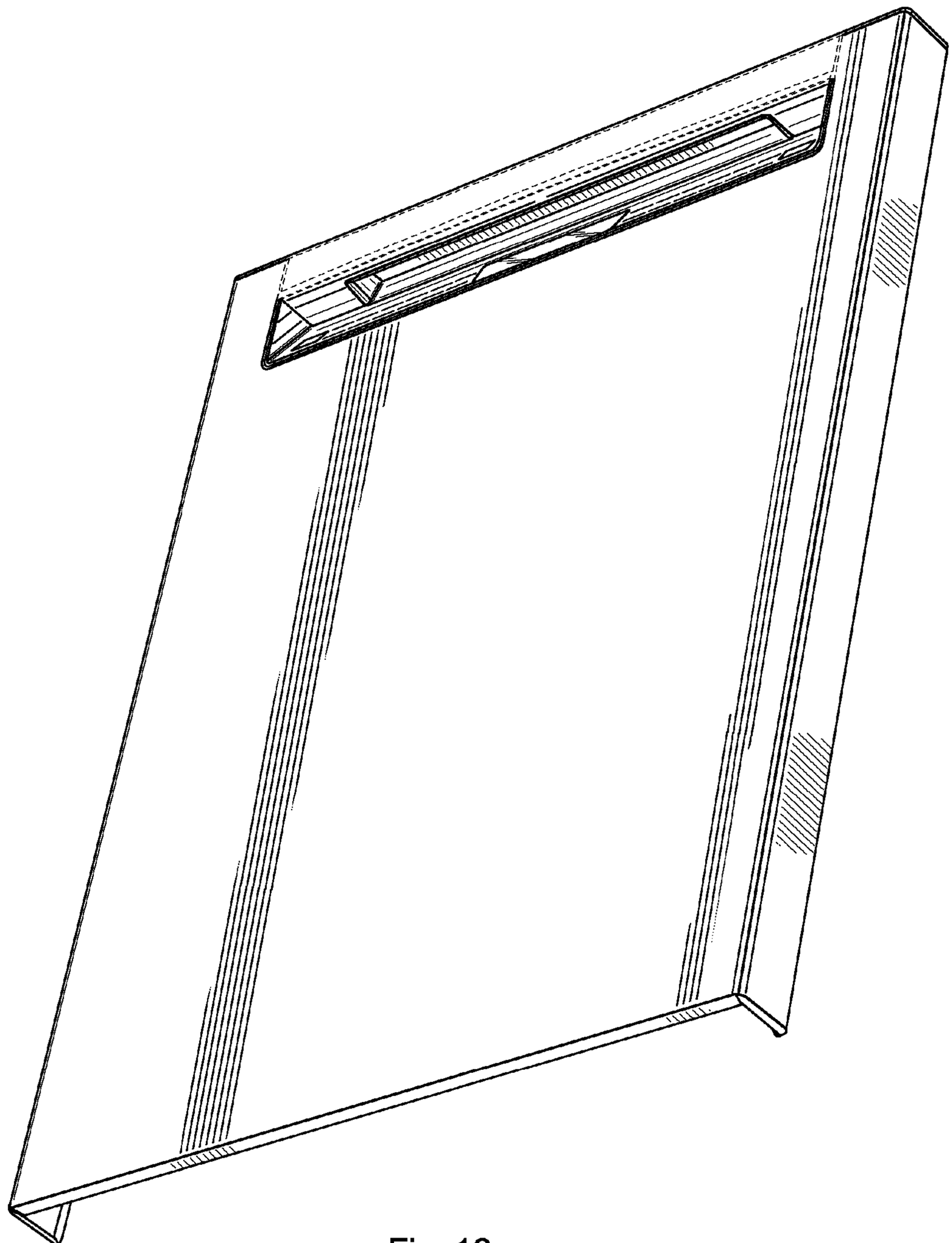

Fig. 16

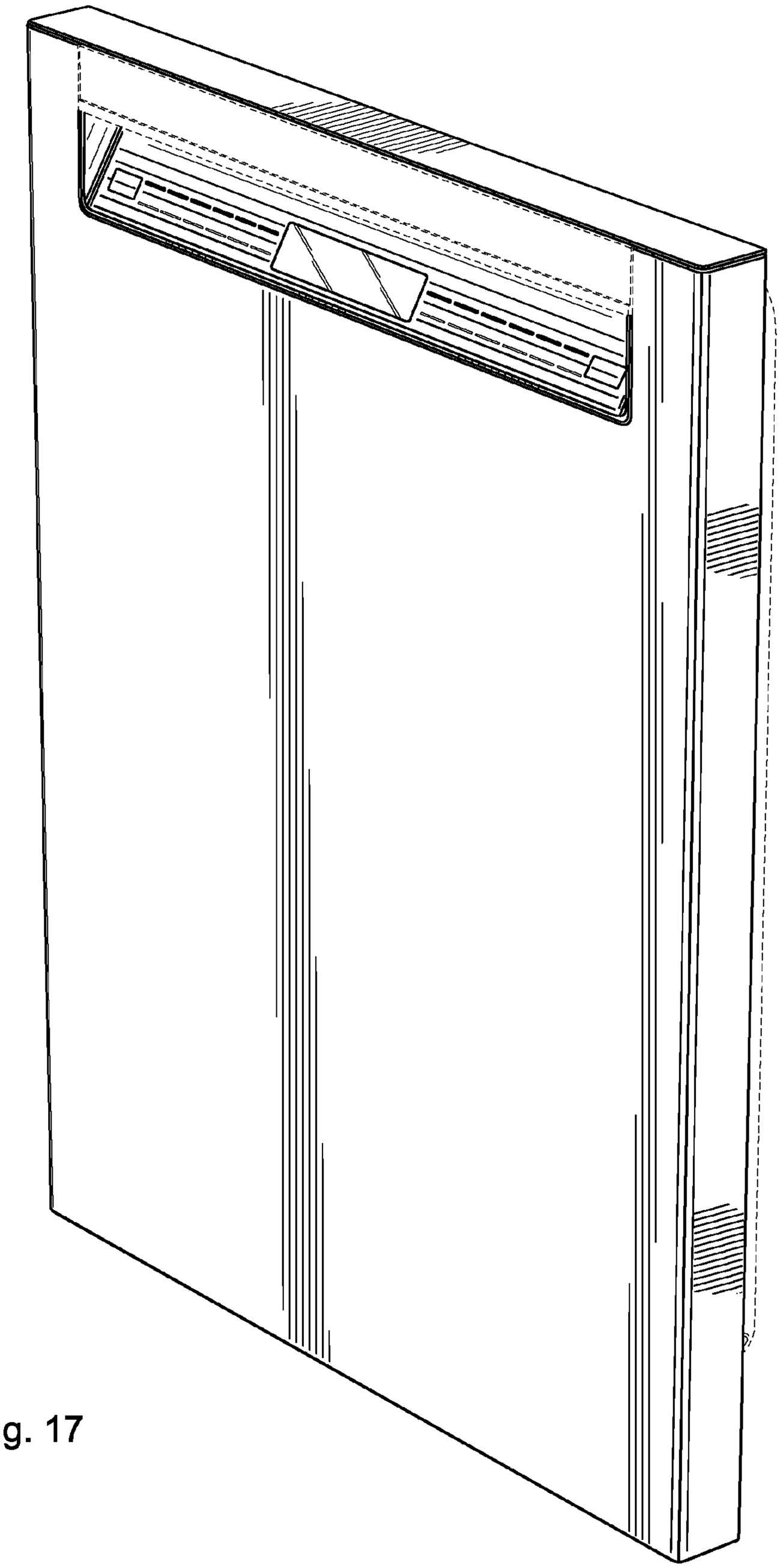

Fig. 17

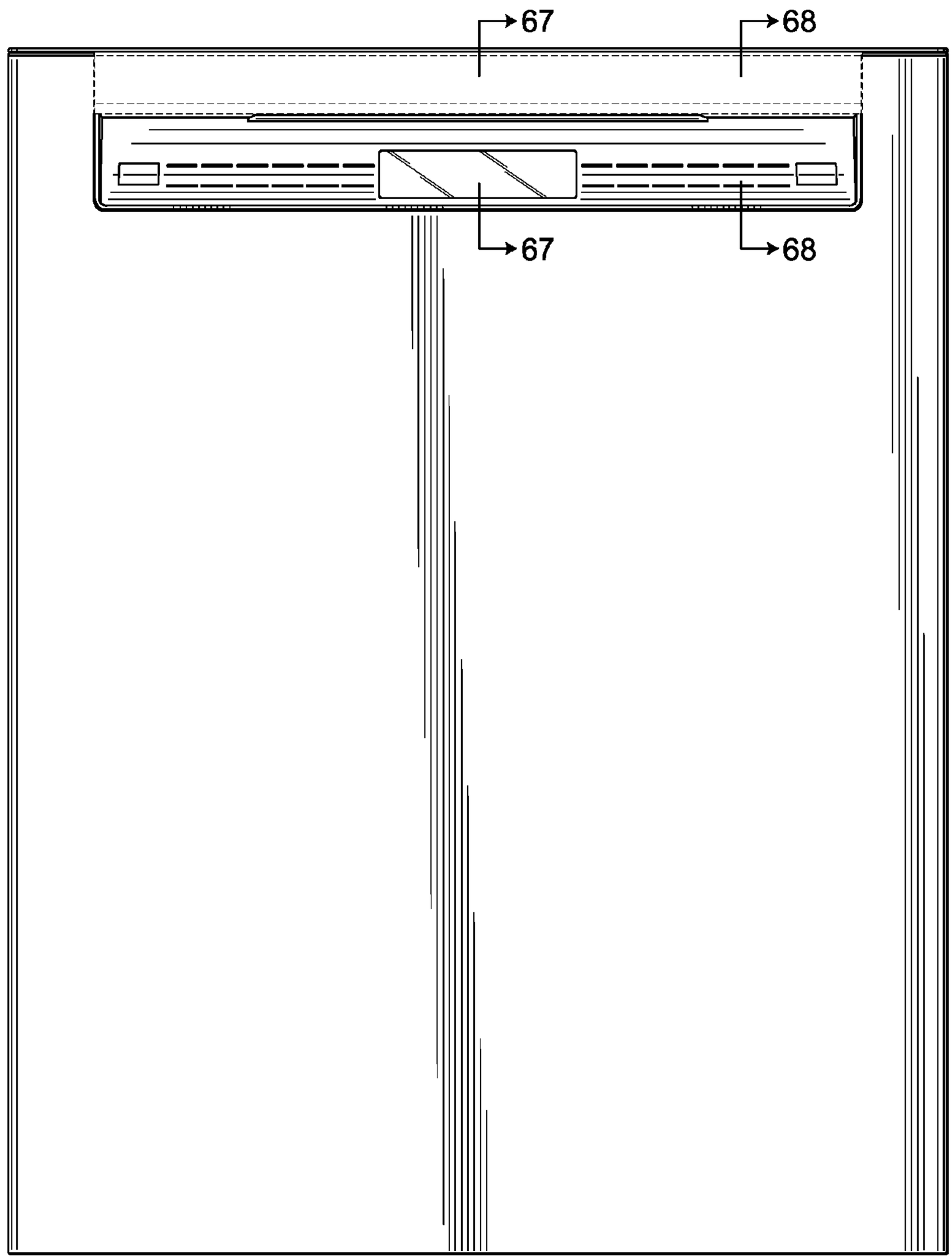

Fig. 18

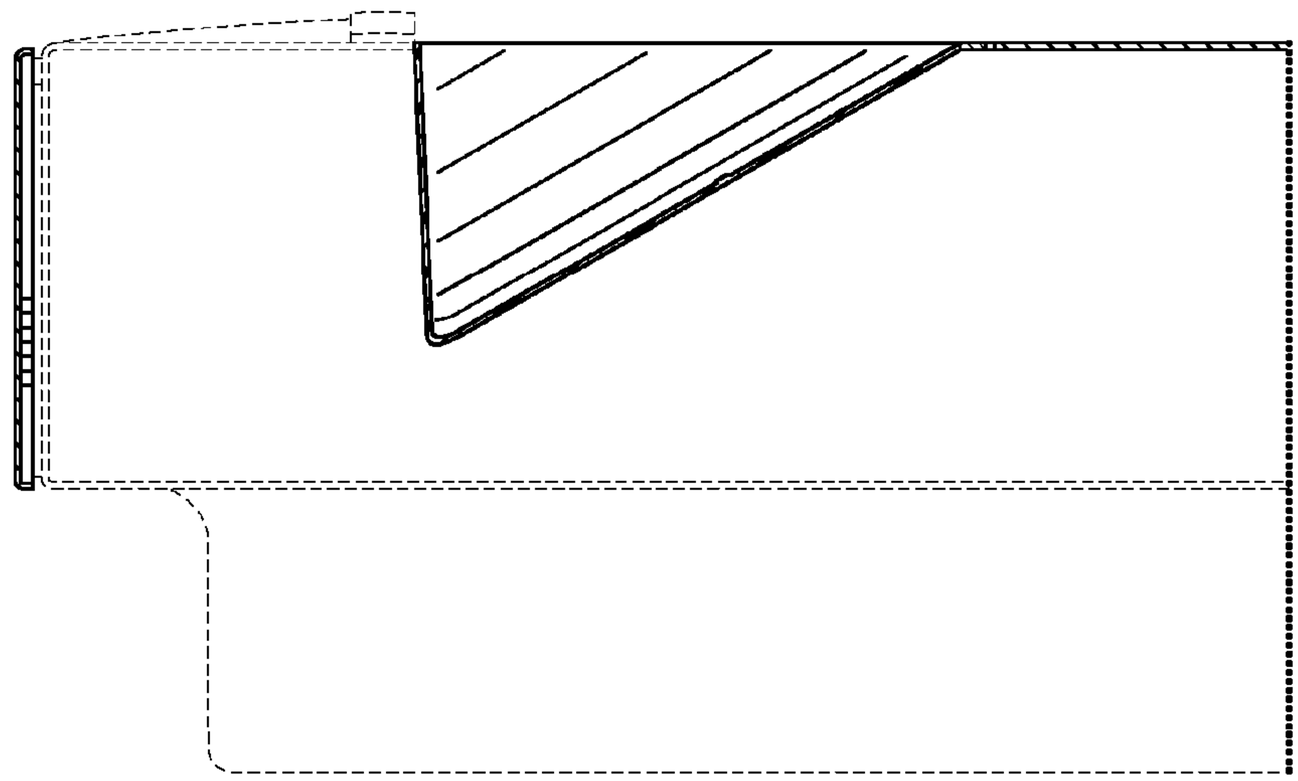

Fig. 20

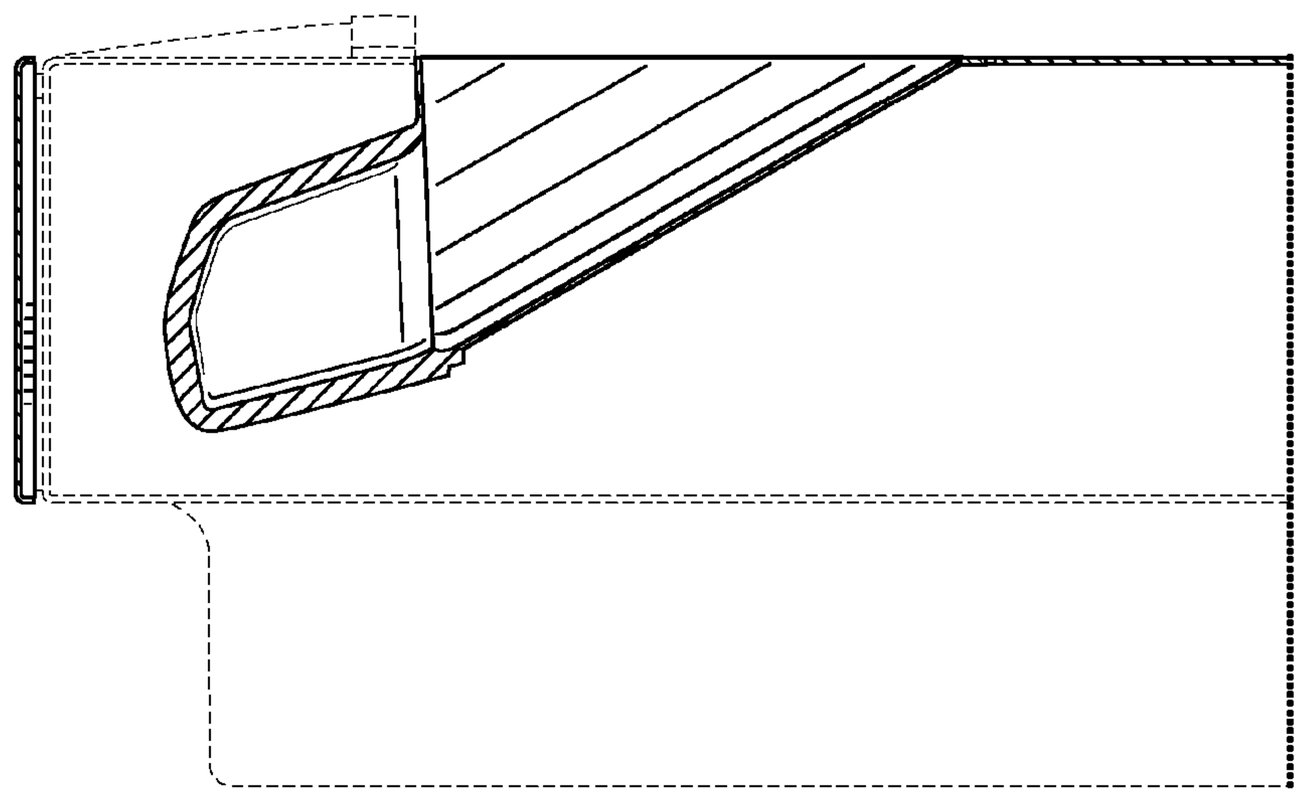

Fig. 19

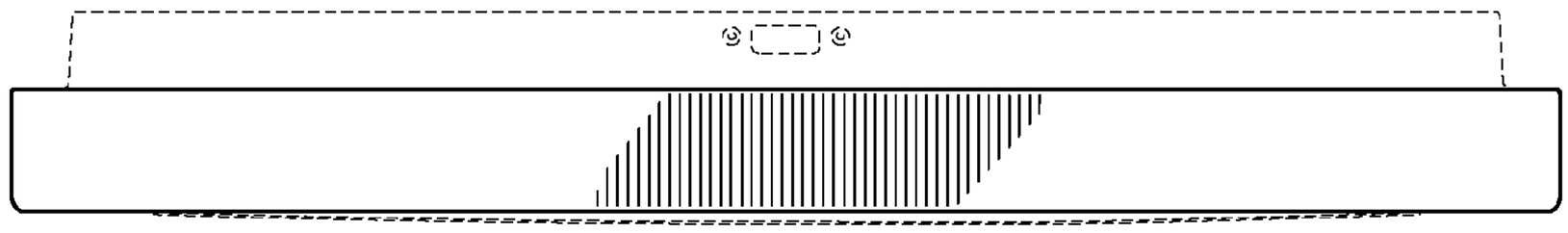

Fig. 21

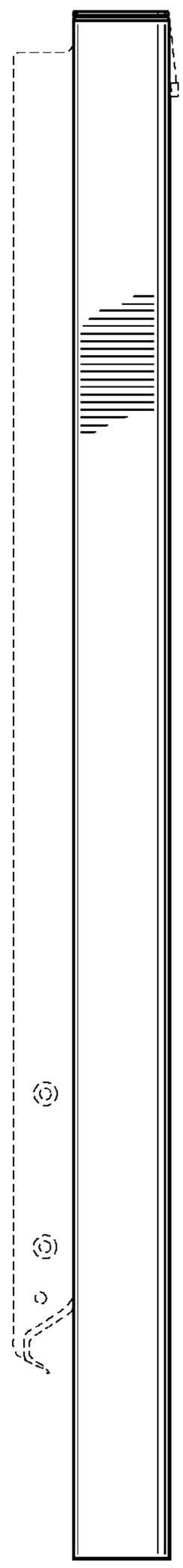

Fig. 22

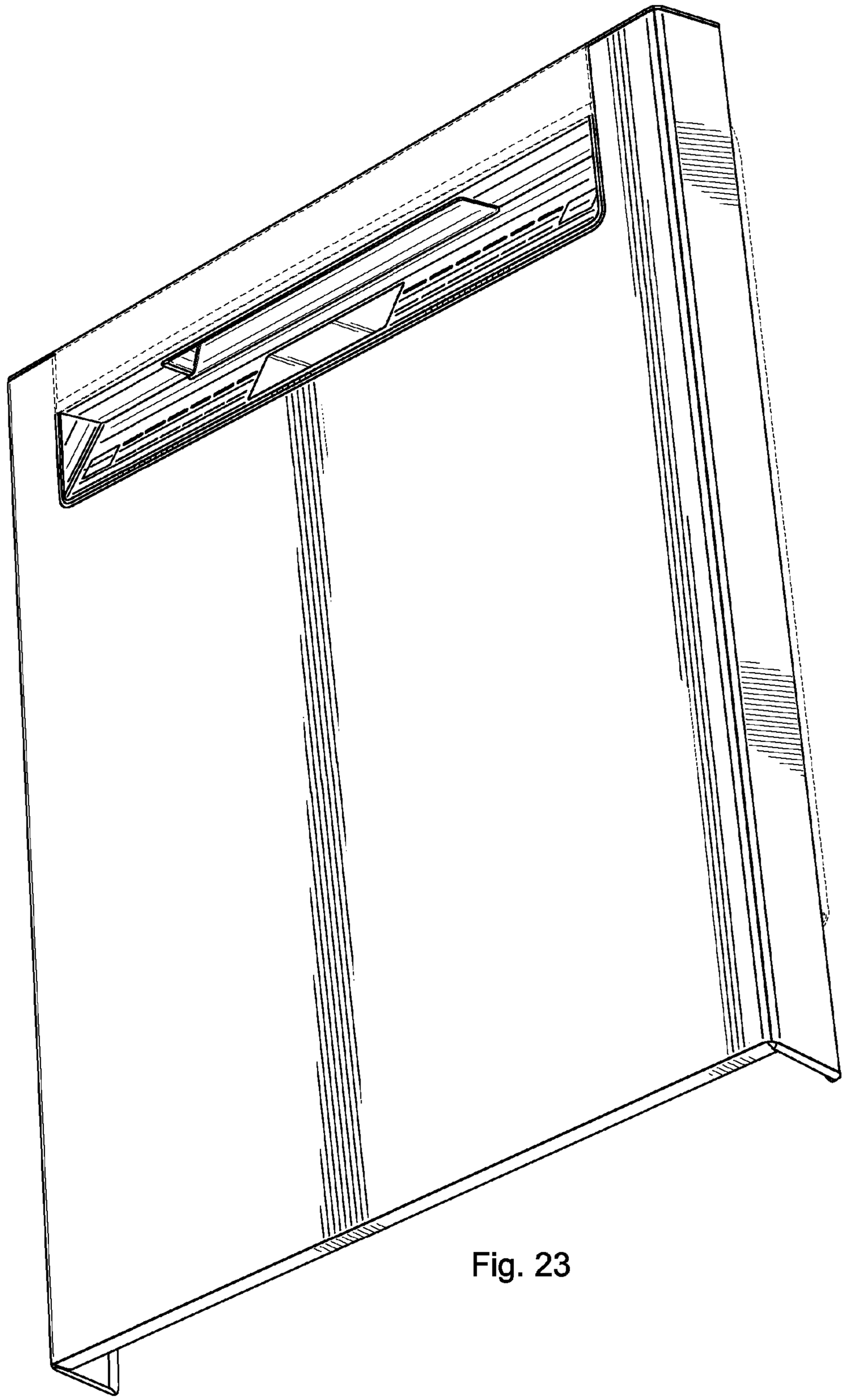

Fig. 23

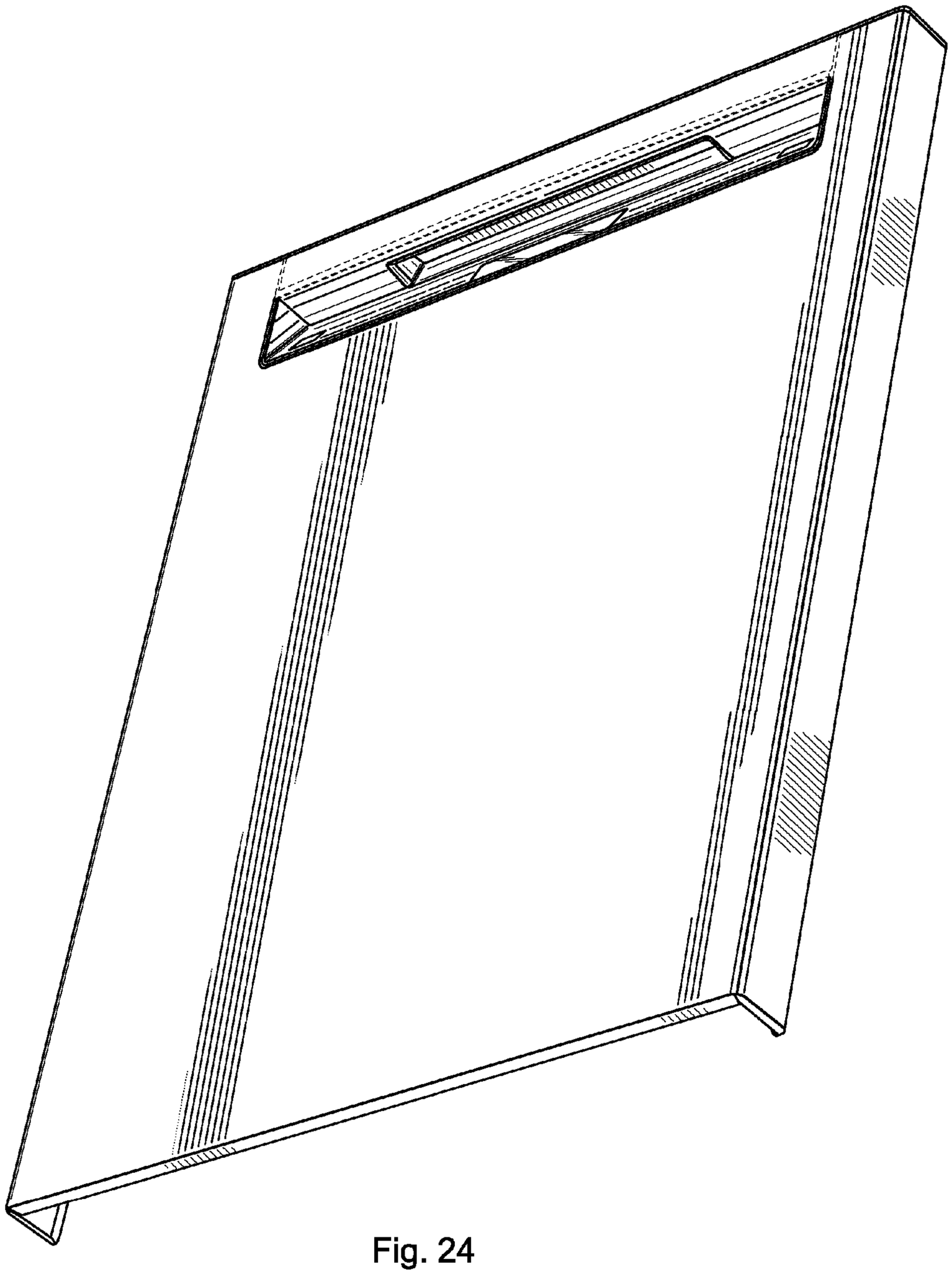

Fig. 24