US00D699176S

(12) United States Design Patent

Salomon et al.

(10) Patent No.: US D699,176 S
(45) Date of Patent: ** Feb. 11, 2014

(54) **FASTENER FOR SOLAR MODULES**

(75) Inventors: **Asher David Salomon**, Berkeley, CA (US); **Scott Paul Skinner**, San Leandro, CA (US)

(73) Assignee: **Solaria Corporation**, Fremont, CA (US)

(**) Term: **14 Years**

(21) Appl. No.: **29/393,340**

(22) Filed: **Jun. 2, 2011**

(51) **LOC (10) Cl.** **13-02**

(52) **U.S. Cl.**
USPC **D13/102**

(58) **Field of Classification Search**
USPC D13/102, 118, 184, 199; D8/349, 354, D8/355, 356; D25/119, 123, 124, 125; 52/173.3, 460; 126/573, 580; 136/206, 136/244–251, 256, 291, 292; 439/567
See application file for complete search history.

(56) **References Cited**

U.S. PATENT DOCUMENTS

2,470,618	A		5/1949	Holden
3,330,700	A		7/1967	Sequeira et al.
3,446,676	A		5/1969	Goldsmith et al.
3,575,721	A		4/1971	Mann
3,597,050	A		8/1971	Plumat
3,641,354	A		2/1972	De Ment
3,700,714	A		10/1972	Hamilton et al.
3,819,417	A		6/1974	Haynos
3,849,880	A		11/1974	Haynos
3,874,931	A		4/1975	Haynos
3,951,633	A		4/1976	Danihel
3,993,505	A		11/1976	Pack
D242,626	S	*	12/1976	Scrivener D25/123
3,999,283	A		12/1976	Dean et al.

(Continued)

FOREIGN PATENT DOCUMENTS

AU	743826	2/2002
AU	220348	6/2002

(Continued)

OTHER PUBLICATIONS

Aclar Fluropolymer Film by SPI Supplies, http://web.archive.org/web/20021022180352/http://www.2spi.com/catalog/photo/acalr-film.shtml, 3 pages.

(Continued)

Primary Examiner — Derrick Holland
(74) *Attorney, Agent, or Firm* — Richard T. Ogawa; Ogawa P.C.

(57) **CLAIM**

The ornamental design for fastener for solar modules, as shown and described.

DESCRIPTION

FIG. **1** is a first perspective view of a fastener for solar modules according to the present invention;
FIG. **2** is a second perspective view thereof;
FIG. **3** is an exploded perspective view thereof;
FIG. **4** is a top plan view thereof;
FIG. **5** is a bottom plan view thereof;
FIG. **6** is a front elevation view thereof, the rear elevation view being a mirror image;
FIG. **7** is a side elevation view thereof, the opposite side elevation being a mirror image;
FIG. **8** is a front elevation view thereof, shown in environmental use;
FIG. **9** is an exploded front elevation view thereof;
FIG. **10** is a side elevation view thereof, shown in environmental use; and,
FIG. **11** is an exploded side elevation view thereof.
The broken lines shown represent unclaimed subject matter and form no part of the claimed design.

1 Claim, 10 Drawing Sheets

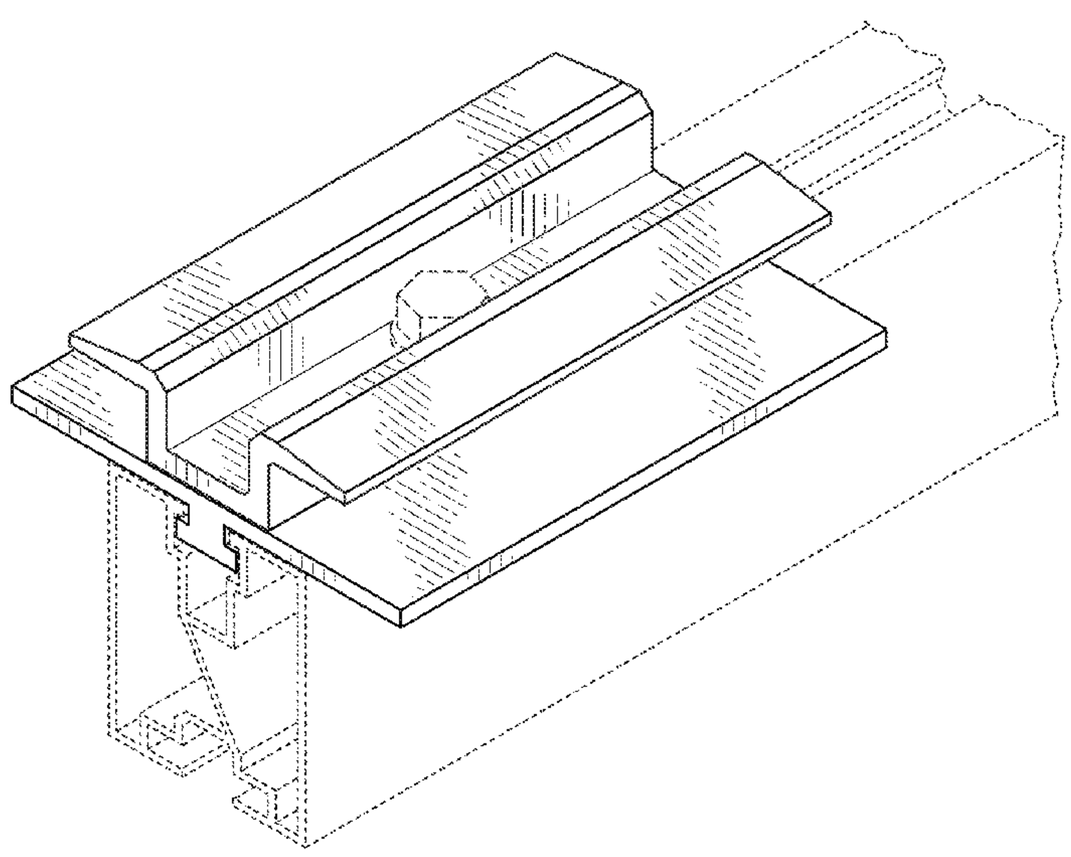

(56) **References Cited**

U.S. PATENT DOCUMENTS

4,029,519 A 6/1977 Schertz et al.
4,056,405 A 11/1977 Varandi
4,091,798 A 5/1978 Fletcher et al.
4,097,308 A 6/1978 Klein et al.
4,106,952 A 8/1978 Kravitz
4,118,249 A 10/1978 Graven et al.
4,122,833 A 10/1978 Lovelace et al.
4,143,234 A 3/1979 Johnson et al.
4,166,917 A 9/1979 Dorfeld et al.
4,170,507 A 10/1979 Keeling et al.
4,174,978 A 11/1979 Lidorenko et al.
4,193,820 A 3/1980 Thomas
4,203,646 A 5/1980 Desso
4,239,555 A 12/1980 Scharlack et al.
4,257,821 A 3/1981 Kelly et al.
4,291,191 A 9/1981 Dahlberg
4,293,192 A 10/1981 Bronstein
4,295,463 A 10/1981 Citron
4,333,447 A 6/1982 Lemrow et al.
4,355,478 A 10/1982 Armstrong
4,361,136 A 11/1982 Huang
4,362,903 A 12/1982 Eichelberger et al.
4,404,422 A 9/1983 Green
4,429,178 A * 1/1984 Prideaux et al. 136/246
4,440,153 A 4/1984 Melchior
4,449,514 A 5/1984 Selcuk
4,454,371 A 6/1984 Folino
4,457,297 A 7/1984 Sobczak et al.
4,463,749 A 8/1984 Sobczak et al.
4,495,360 A 1/1985 Anthony
4,511,618 A 4/1985 Duchene et al.
4,562,637 A 1/1986 Kushima et al.
4,571,812 A 2/1986 Gee
4,589,191 A 5/1986 Green
4,638,110 A 1/1987 Erbert
4,663,562 A 5/1987 Miller et al.
4,668,314 A 5/1987 Endoh et al.
4,680,074 A 7/1987 Schmitz et al.
4,683,154 A 7/1987 Benson et al.
4,691,994 A 9/1987 Tveryanovich
4,692,557 A 9/1987 Samuelson et al.
4,697,042 A 9/1987 Schilling
4,711,972 A 12/1987 O'Neill
4,830,038 A 5/1989 Anderson et al.
4,848,319 A 7/1989 Appeldorn
4,863,224 A 9/1989 Tveryanovich
4,953,577 A 9/1990 Marshall
4,964,713 A 10/1990 Goetzberger
4,999,059 A 3/1991 Bagno
5,006,179 A 4/1991 Gaddy et al.
5,011,544 A 4/1991 Gaddy et al.
5,043,198 A 8/1991 Maruyama et al.
5,080,725 A 1/1992 Green et al.
5,118,361 A 6/1992 Fraas et al.
5,153,780 A 10/1992 Jorgensen et al.
5,158,618 A 10/1992 Rubin et al.
5,167,724 A 12/1992 Chiang
5,174,275 A 12/1992 Holland
5,180,442 A 1/1993 Elias
5,180,888 A 1/1993 Sugiyama et al.
5,224,978 A 7/1993 Hermant et al.
5,240,510 A 8/1993 Goldade et al.
5,245,985 A 9/1993 Holland
5,261,970 A 11/1993 Landis et al.
D344,598 S * 2/1994 Ehmke et al. D25/124
5,344,496 A 9/1994 Stern et al.
5,356,488 A 10/1994 Hezel
5,365,920 A 11/1994 Lechner
5,395,070 A 3/1995 Wilk
5,409,549 A 4/1995 Mori
5,436,725 A 7/1995 Ledger
5,449,626 A 9/1995 Hezel
5,460,659 A 10/1995 Krut
5,466,301 A 11/1995 Hammerbacher et al.
5,468,304 A 11/1995 Hammerbacher
5,478,402 A 12/1995 Hanoka
5,498,297 A 3/1996 O'Neill et al.
5,508,205 A 4/1996 Dominguez et al.
5,517,339 A 5/1996 Riccobono et al.
5,529,054 A 6/1996 Shoen
5,542,409 A 8/1996 Sampayo
5,564,411 A 10/1996 Gerics
5,616,186 A 4/1997 Fraas et al.
5,660,644 A 8/1997 Clemens
5,665,607 A 9/1997 Kawama et al.
5,707,459 A 1/1998 Itoyama et al.
5,709,833 A 1/1998 Simone
5,735,966 A 4/1998 Luch
5,782,993 A 7/1998 Ponewash
5,787,878 A 8/1998 Ratliff
5,840,147 A 11/1998 Grimm
5,846,444 A 12/1998 Edwards et al.
5,851,309 A 12/1998 Kousa
5,865,905 A 2/1999 Clemens
5,877,874 A 3/1999 Rosenberg
5,882,434 A 3/1999 Horne
5,915,170 A 6/1999 Raab et al.
5,919,316 A 7/1999 Bogorad et al.
5,936,777 A 8/1999 Dempewolf
5,959,787 A 9/1999 Fairbanks
5,964,216 A 10/1999 Hoffschmidt et al.
6,008,449 A 12/1999 Cole
6,020,553 A 2/2000 Yogev
6,034,322 A 3/2000 Pollard
6,049,035 A 4/2000 Tsuri et al.
6,057,505 A 5/2000 Ortabasi
6,074,614 A 6/2000 Hafeman et al.
6,084,175 A 7/2000 Perry et al.
6,091,017 A 7/2000 Stern
6,091,020 A 7/2000 Fairbanks et al.
6,092,392 A 7/2000 Verlinden et al.
6,093,757 A 7/2000 Pern
6,107,564 A 8/2000 Aguilera et al.
6,118,067 A 9/2000 Lashley et al.
6,134,784 A 10/2000 Carrie et al.
6,150,602 A 11/2000 Campbell
6,167,724 B1 1/2001 Pozivil
6,242,685 B1 6/2001 Mizukami et al.
6,252,155 B1 6/2001 Ortabasi
6,264,510 B1 7/2001 Onizuka
6,274,402 B1 8/2001 Verlinden et al.
6,274,860 B1 8/2001 Rosenberg
6,293,803 B1 9/2001 Rust et al.
6,294,723 B2 9/2001 Uematsu et al.
6,309,901 B1 10/2001 Tahon et al.
6,313,395 B1 11/2001 Crane et al.
6,315,575 B1 11/2001 Kajimoto
6,320,116 B1 11/2001 Hanoka
6,323,415 B1 11/2001 Uematsu et al.
6,333,457 B1 12/2001 Mulligan et al.
6,333,458 B1 12/2001 Forrest et al.
6,337,283 B1 1/2002 Verlinden et al.
6,359,209 B1 3/2002 Glenn et al.
6,365,823 B1 4/2002 Kondo
6,387,726 B1 5/2002 Verlinden et al.
6,395,972 B1 5/2002 Tran et al.
6,423,568 B1 7/2002 Verlinden et al.
6,429,037 B1 8/2002 Wenham et al.
6,433,913 B1 8/2002 Bauer et al.
6,437,236 B2 8/2002 Watanabe et al.
6,440,769 B2 8/2002 Peumans et al.
6,441,297 B1 8/2002 Keller
6,479,744 B1 11/2002 Tsuzuki et al.
6,528,716 B2 3/2003 Collette et al.
6,528,718 B2 3/2003 Yoda et al.
6,609,836 B1 8/2003 Antonelli et al.
6,612,705 B1 9/2003 Davidson et al.
6,617,505 B2 9/2003 Shimada
6,619,282 B1 9/2003 Murtha
6,620,995 B2 9/2003 Vasylyev et al.
6,639,733 B2 10/2003 Minano et al.
6,641,868 B2 11/2003 Abe et al.
6,666,207 B1 12/2003 Arkas et al.
6,676,263 B2 1/2004 Winston

(56) **References Cited**

U.S. PATENT DOCUMENTS

6,700,054	B2	3/2004	Cherney et al.	
6,700,055	B2	3/2004	Barone	
6,758,609	B2	7/2004	Fathi et al.	
6,761,598	B2	7/2004	Onizuka et al.	
6,804,062	B2	10/2004	Atwater et al.	
6,809,250	B2	10/2004	Gerson	
6,815,050	B2	11/2004	Rainer	
6,815,070	B1	11/2004	Burkle et al.	
6,822,157	B2	11/2004	Fujioka	
6,825,052	B2	11/2004	Eldridge et al.	
6,829,908	B2	12/2004	Bowden et al.	
6,843,573	B2	1/2005	Rabinowitz et al.	
6,849,797	B2	2/2005	Koyanagi et al.	
6,903,261	B2	6/2005	Habraken et al.	
6,958,868	B1	10/2005	Pender	
7,019,207	B2	3/2006	Harneit et al.	
7,055,519	B2	6/2006	Litwin	
7,071,134	B2	7/2006	Koyama et al.	
7,144,598	B2	12/2006	Moravec et al.	
7,156,666	B2	1/2007	Mann	
7,190,110	B2	3/2007	Tokai et al.	
D547,262	S *	7/2007	Ullman	D13/102
7,250,209	B2	7/2007	Shibahara et al.	
D550,861	S *	9/2007	Brabeck et al.	D25/123
7,282,240	B1	10/2007	Jackman et al.	
7,309,831	B2	12/2007	Yamada	
D564,958	S *	3/2008	Almy et al.	D13/102
7,423,083	B2	9/2008	Kawaguchi et al.	
7,595,543	B2	9/2009	Weber et al.	
8,247,685	B2 *	8/2012	Hunter et al.	136/259
2002/0007845	A1	1/2002	Collette et al.	
2002/0018308	A1	2/2002	Winston	
2002/0075579	A1	6/2002	Vasylyev et al.	
2002/0139414	A1	10/2002	Vasylyev et al.	
2003/0015233	A1	1/2003	Barone	
2003/0016539	A1	1/2003	Minano et al.	
2003/0021897	A1	1/2003	Abe et al.	
2003/0037569	A1	2/2003	Arbab et al.	
2003/0037814	A1	2/2003	Cohen et al.	
2003/0074976	A1	4/2003	Ahmad	
2003/0081333	A1	5/2003	Winston	
2003/0095340	A1	5/2003	Atwater et al.	
2003/0121542	A1	7/2003	Harneit et al.	
2003/0156337	A1	8/2003	Davidson et al.	
2003/0201007	A1	10/2003	Fraas et al.	
2003/0228114	A1	12/2003	Fathi et al.	
2003/0228417	A1	12/2003	Nishikawa et al.	
2004/0004216	A1	1/2004	Eldridge et al.	
2004/0016454	A1	1/2004	Murphy et al.	
2004/0021964	A1	2/2004	Rabinowitz et al.	
2004/0084077	A1	5/2004	Aylaian	
2004/0092668	A1	5/2004	Kawaguichi et al.	
2004/0097012	A1	5/2004	Weber et al.	
2004/0108813	A1	6/2004	Tokai et al.	
2004/0123895	A1	7/2004	Kardauskas et al.	
2004/0134531	A1	7/2004	Habraken et al.	
2004/0194820	A1	10/2004	Barone	
2004/0229394	A1	11/2004	Yamada	
2004/0243364	A1	12/2004	Wendelin et al.	
2004/0246605	A1	12/2004	Stiles et al.	
2005/0070059	A1	3/2005	Blakers et al.	
2005/0081908	A1	4/2005	Stewart	
2005/0081909	A1	4/2005	Paull	
2005/0087294	A1	4/2005	Rabinowitz	
2005/0133082	A1	6/2005	Konold et al.	
2006/0054211	A1	3/2006	Meyers et al.	
2006/0099833	A1	5/2006	Mann	
2006/0105897	A1	5/2006	Kasuga et al.	
2006/0207646	A1	9/2006	Terreau et al.	
2006/0235717	A1	10/2006	Sharma et al.	
2006/0266406	A1	11/2006	Faust et al.	
2006/0272698	A1	12/2006	Durvasula	
2006/0283495	A1	12/2006	Gibson	
2007/0056626	A1	3/2007	Funcell	
2007/0095386	A1	5/2007	Gibson	
2007/0153354	A1	7/2007	Duston et al.	
2007/0212935	A1 *	9/2007	Lenox	439/567
2007/0251568	A1	11/2007	Maeda	
2008/0060696	A1	3/2008	Ho et al.	
2008/0197376	A1	8/2008	Bert et al.	
2008/0236655	A1	10/2008	Baldwin et al.	
2008/0236664	A1	10/2008	Gibson et al.	
2008/0236670	A1	10/2008	Hyoung	
2008/0241479	A1	10/2008	Nghiem et al.	
2008/0314438	A1	12/2008	Tran et al.	

FOREIGN PATENT DOCUMENTS

AU	3902270		5/2003
AU	2349175		6/2003
CA	2432300		6/2002
CA	2467112		6/2003
DE	29823351		6/1999
EP	029721		6/1981
EP	461124		5/1995
EP	784870		4/1996
EP	657948		6/1997
EP	1030376		8/2000
EP	1174342		1/2002
EP	1261039		11/2002
EP	1131586		3/2003
EP	1342259		9/2003
EP	1112597		3/2004
EP	1427025		6/2004
EP	1461834		9/2004
EP	1630875		3/2006
EP	1732141		12/2006
GB	1187969		4/1970
JP	61044741		3/1986
JP	09018031		1/1997
JP	10104547		4/1998
WO	WO 9118420		11/1991
WO	WO 9406046		3/1994
WO	WO 9506330		3/1995
WO	WO 9533220		12/1995
WO	WO 9623115		8/1996
WO	WO 9624954		8/1996
WO	WO 9803823		1/1998
WO	WO 9832164		7/1998
WO	WO 9905462		2/1999
WO	WO 0074147		12/2000
WO	WO 0079593		12/2000
WO	WO 0151962		7/2001
WO	WO 01/55650		8/2001
WO	WO 0155650	A3	8/2001
WO	WO 0190661		11/2001
WO	WO 0208058		1/2002
WO	WO 0245143		6/2002
WO	WO 0275225		9/2002
WO	WO 0295838		11/2002
WO	WO 03019083		3/2003
WO	WO 03022578		3/2003
WO	WO 03047004		6/2003
WO	WO 03049201		6/2003
WO	WO 03107078		12/2003
WO	WO 2004100252		11/2004
WO	WO 2006/015430		2/2006
WO	WO 2006/089540		8/2006
WO	WO 2006/123194		11/2006
WO	WO 2006/128417		12/2006
WO	WO 2006/133126		12/2006
WO	WO 2007/036199		4/2007

OTHER PUBLICATIONS

Andreev et al., "Concentrator PV Modules of "All-Glass" Design With Modified Structure;" Paper 3P-C3-72 presented at WCPEC-3, Osaka Japan; May 11-18, 2003; 4 pages.

Breeze, A.J., et al., "Improving power efficiencies in polymer -polymer blend photvoltaics", Solar Energy Materials & Solar Cells, 83, 2004, pp. 263-271.

3M Glass Bubbles, Product Catalogue for 3M Energy and Advance Materials, Feb. 18, 2009, pp. 1-3.

(56) **References Cited**

OTHER PUBLICATIONS

"Emissivity Values for Common Materials", http://www.infrared-thermography.com/materials-1.htm, retrieved on Apr. 2, 2010, 4 pages.
King et al. "Photovoltaic Module Performance and Durability Following Long-Term Field Exposure", Prog. Photovol: Res. and Appl., vol. 8, No. 2, p. 241-256 (May 23, 2000).
Dominique Leguillon et al., "Crack onset at a v-notch. Influence of the notch tip radius", Aug. 2003, International Journal of Fracture, 122, pp. 1-21.
Marayuma, T., et al. "Wedge-shaped light concentrator using total internal reflection", Solar Energy Materials & Solar Cells, 57, (1999), pp. 75-83.
Nitto Denko, Web page: http://www.nitto.com/productIdatasheetI037/index.html as updated on Apr. 18, 2005 from Internet Archive, 2 pages.
Pern et ai, "Photothermal Stability of an E-Beam Pre-Crosslinked EVA Encapsulant and Its Performance Degradation on a-Si Submodules", NRELICP-520-31 026, Oct. 2001, Lakewood, Colorado, 4 pages.
Petrie, "Additives in Radiation (EB/UV) Cured Adhesive Formulations" www.specialchem4adhesives.com, Oct. 14, 2002,6 pages.
Photovoltaic/Solar Panel Laminations; MADICO, http://www.madico.com/specialtLPv.asp; Jun. 11, 2007; pp. 1-2.
Wells, G.M., et al. "Effects of mirror surface roughness on exposure field uniformity in synchrontron x-ray lithography", American Vacuum Society, J. Vac. Sci. Technol., 1991, pp. 3227-3231.
Solar Electricity Beginner Notes. httl1:llwww.sunwindsolarcom/a lessons/solar beginner notes.html; Jan. 8, 2004; pp. 1-2.
International Search Report and Written Opinion for PCT Application No. PCT/US2010/024943, mailed Apr. 22, 2010, 9 pages.
International Search Report and Written Opinion for PCT Application No. PCT/US08/71127, mailed Oct. 22, 2008, 9 pages.
International Search Report and Written Opinion for PCT Application No. PCT/US2008/059170 mailed Aug. 6, 2008, 8 pages.
International Search Report and Written Opinion for PCT Application No. PCT/US2008/075134 mailed Dec. 5, 2008, 9 pages.
International Search Report and Written Opinion for PCT Application No. PCT/US2008/064132 mailed Aug. 15, 2008, 8 pages.
International Search Report and Written Opinion for PCT Application No. PCT/US08/59167, mailed Dec. 8, 2008, 11 pages.
International Search Report and Written Opinion for PCT Application No. PCT/US06/35793, mailed May 10, 2007 ,8 pages.
International Search Report and Written Opinion for PCT Application No. PCT/US06/29164, mailed Jun. 5, 2008, 16 pages total.
International Search Report and Written Opinion for PCT Application No. PCT/US06/21803, dated Aug. 30, 2007 ,21 pages total.
Office Action for U.S. Appl. No. 11/445,933 dated Oct. 14, 2009, 8 pages.
Office Action for U.S. Appl. No. 11/445,933 dated Apr. 14, 2010, 7 pages.
Office Action for U.S. Appl. No. 11/445,948 dated May 22, 2009, 18 pages.
Office Action for U.S. Appl. No. 11/445,948 dated Apr. 15, 2010,27 pages.
Office Action for U.S. Appl. No. 11/493,380 dated May 30, 2008,25 pages.
Office Action for U.S. Appl. No. 11/493,380 dated Feb. 17, 2009, 24 pages.
Office Action for U.S. Appl. No. 11/493,380 dated Jul. 22, 2009,22 pages.
Office Action for U.S. Appl. No. 12/136,572 dated Feb. 4, 2010, 15 pages.
Office Action for U.S. Appl. No. 12/136,574 dated Dec. 29, 2008, 9 pages.
Office Action for U.S. Appl. No. 12/136,574 dated Jun. 8, 2009, 10 pages.
Office Action for U.S. Appl. No. 12/136,574 dated Jan. 12, 2010, 15 pages.
Office Action for U.S. Appl. No. 12/136,577 dated Jun. 8, 2009, 12 pages.
Office Action for U.S. Appl. No. 12/136,581 dated Feb. 4, 2010,13 pages.
Office Action for U.S. Appl. No. 11/402,490 dated Mar. 3, 2009, 18 pages.
Office Action for U.S. Appl. No. 11/402,490 dated Oct. 30, 2009, 12 pages.
Office Action for U.S. Appl. No. 12/167,198 dated Dec. 19, 2008, 15 pages.
Office Action for U.S. Appl. No. 11/254,114 dated Feb. 2, 2010, 10 pages.
Office Action for U.S. Appl. No. 11/253,182 dated Jan. 8, 2009, 14 pages.
Office Action for U.S. Appl. No. 11/253,182 dated Feb. 5, 2010,6 pages.
Office Action for U.S. Appl. No. 11/252,425 dated Jul. 9, 2008,6 pages.
Office Action for U.S. Appl. No. 11/252,425 dated Mar. 19, 2009,6 pages.
Office Action for U.S. Appl. No. 11/252,425 dated Oct. 16, 2009, 6 pages.
Office Action for U.S. Appl. No. 11/253,418 dated Sep. 11, 2009,20 pages.
Office Action for U.S. Appl. No. 11/253,202 dated Feb. 19, 2009, 22 pages.
Office Action for U.S. Appl. No. 11/253,202 dated Aug. 31, 2009, 19 pages.
Office Action for U.S. Appl. No. 11/252,399 dated Aug. 20, 2008, 16 pages.
Office Action for U.S. Appl. No. 11/252,399 dated Jun. 2, 2009, 17 pages.
Office Action for U.S. Appl. No. 11/252,399 dated Dec. 4, 2009,22 pages.
Office Action for U.S. Appl. No. 11/254,041 dated Jan. 26, 2010, 8 pages.
Office Action for U.S. Appl. No. 11/290,313 dated Sep. 21, 2009 7 pages.
Office Action for U.S. Appl. No. 11/290,313 dated Apr. 15, 2010, 10 pages.
Office Action for U.S. Appl. No. 11/753,546 dated Mar. 31, 2010 , 10 pages.
Office Action for U.S. Appl. No. 12/060,801 dated Apr. 13, 2010 , 24 pages.
Office Action for U.S. Appl. No. 12/332,340 dated Apr. 26, 2010, 17 pages.
Office Action for U.S. Appl. No. 11/841,899 of Mar. 11, 2008, 18 pages.

* cited by examiner

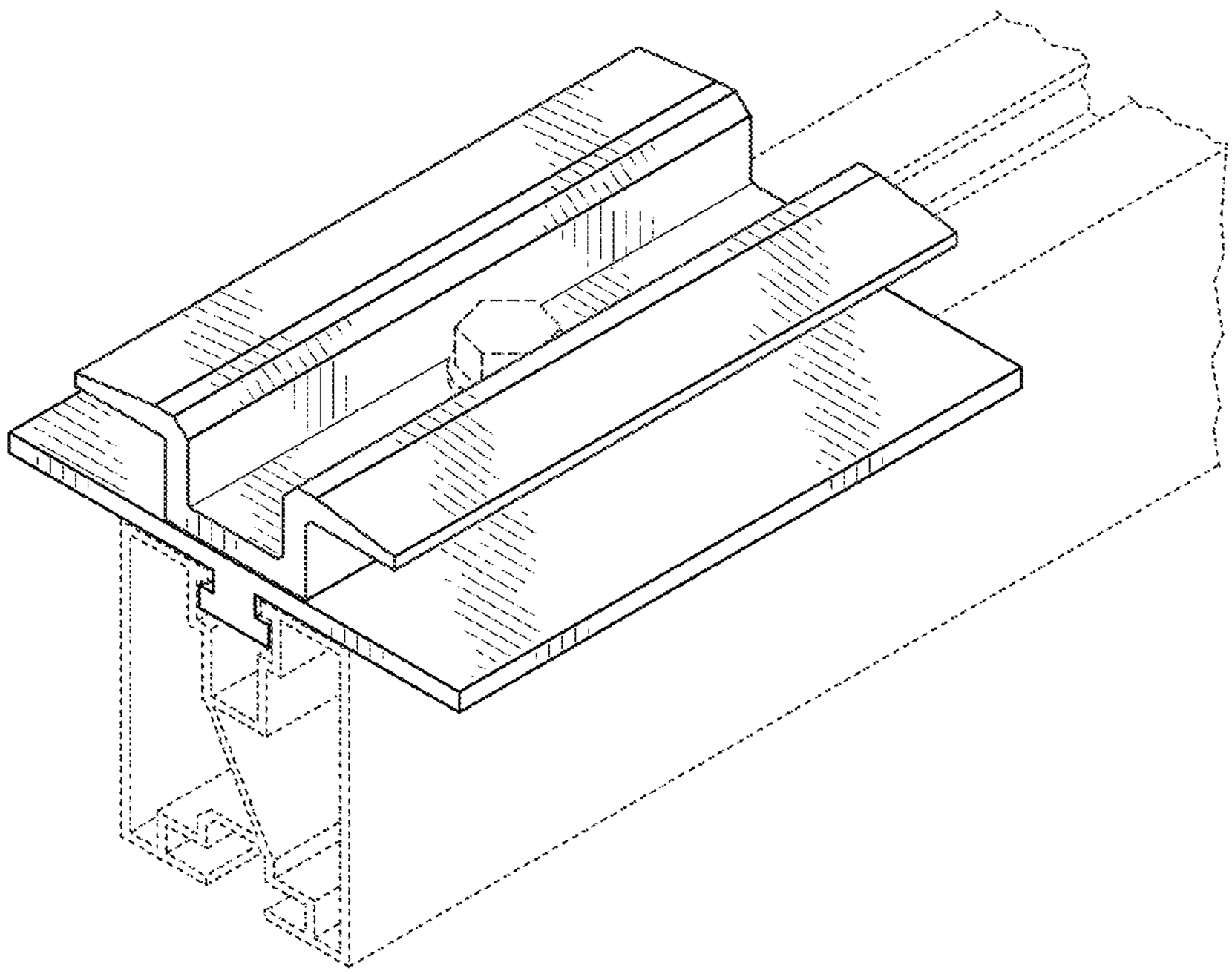

FIG. 1

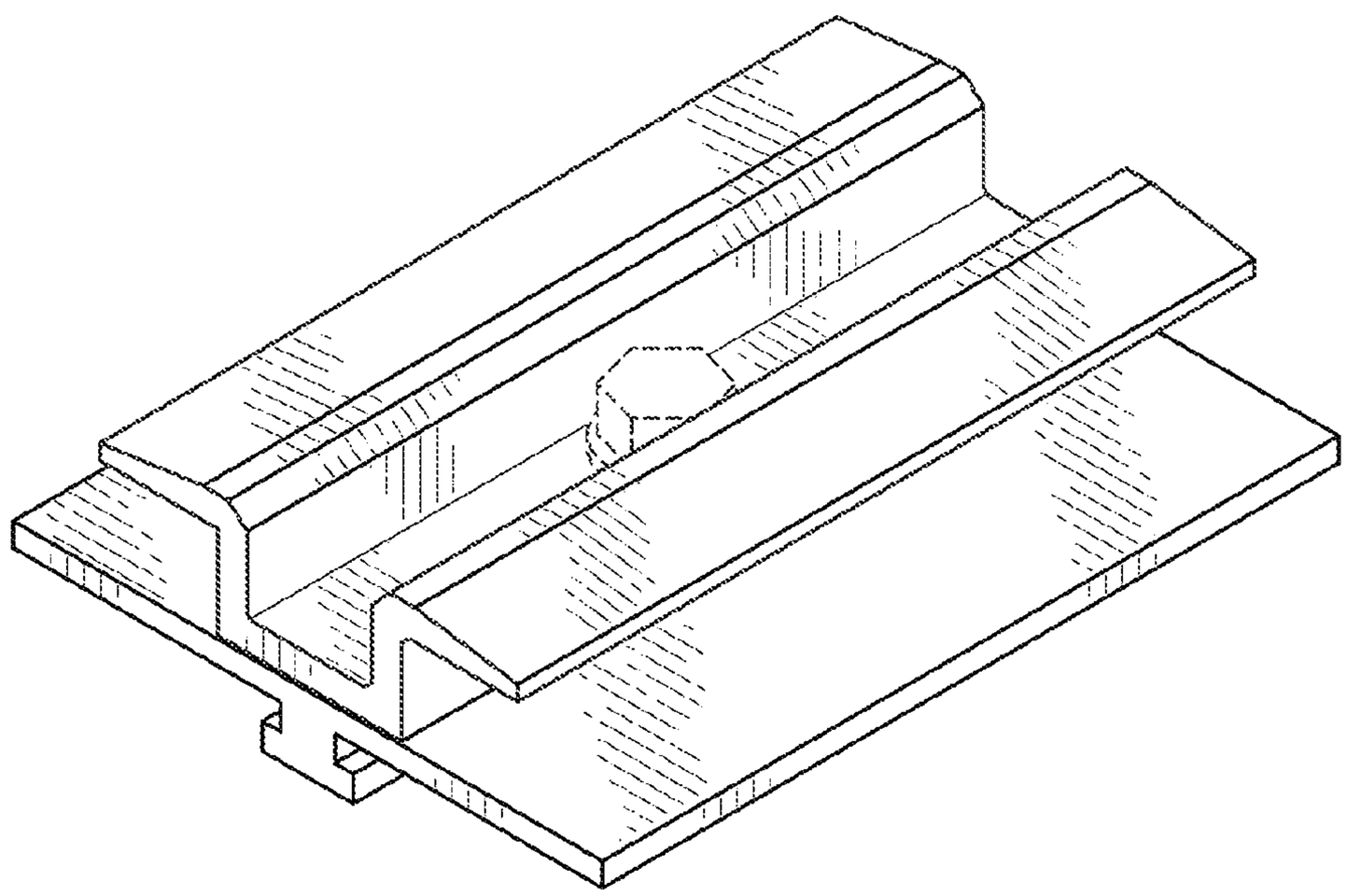

FIG. 2

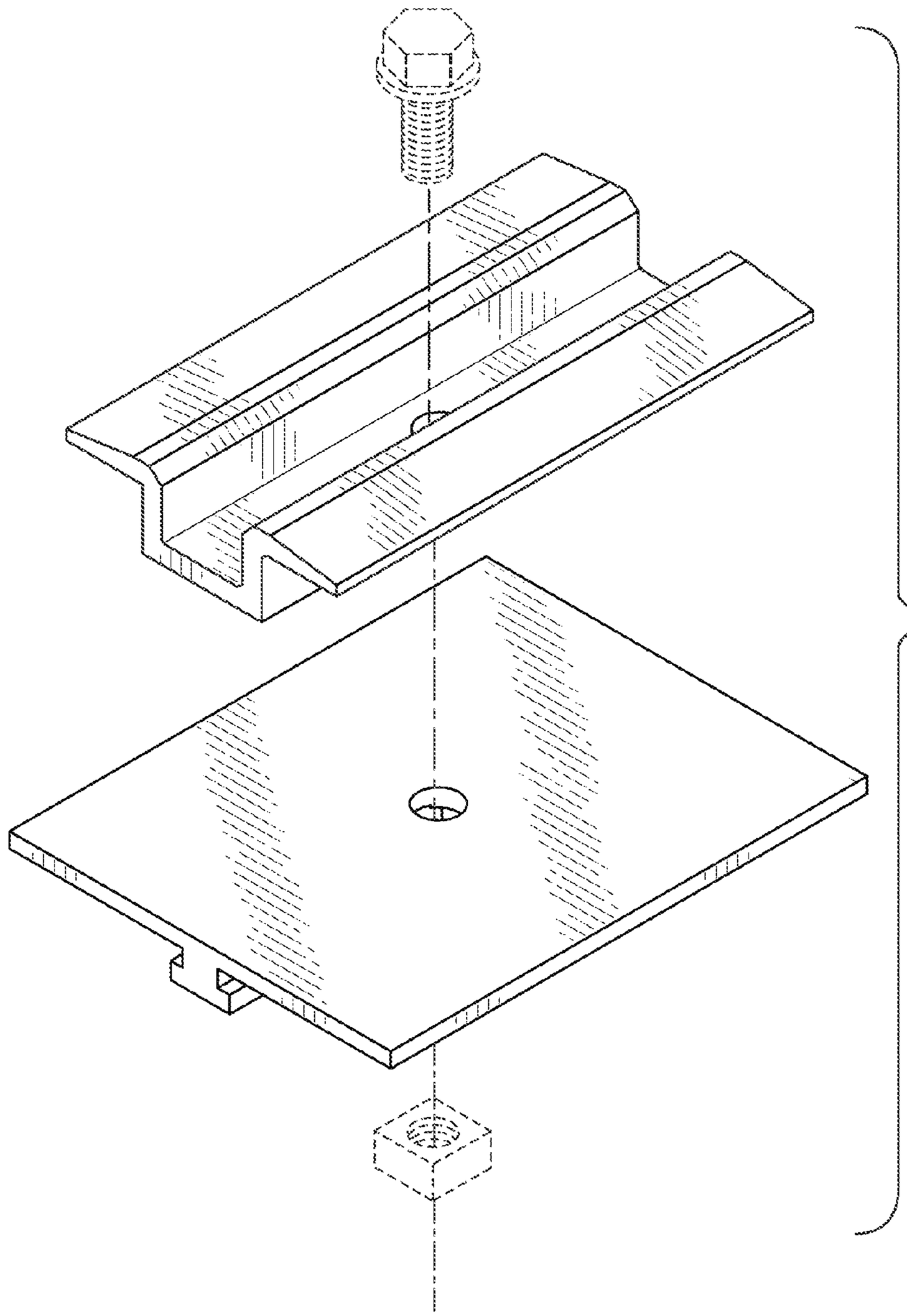

FIG. 3

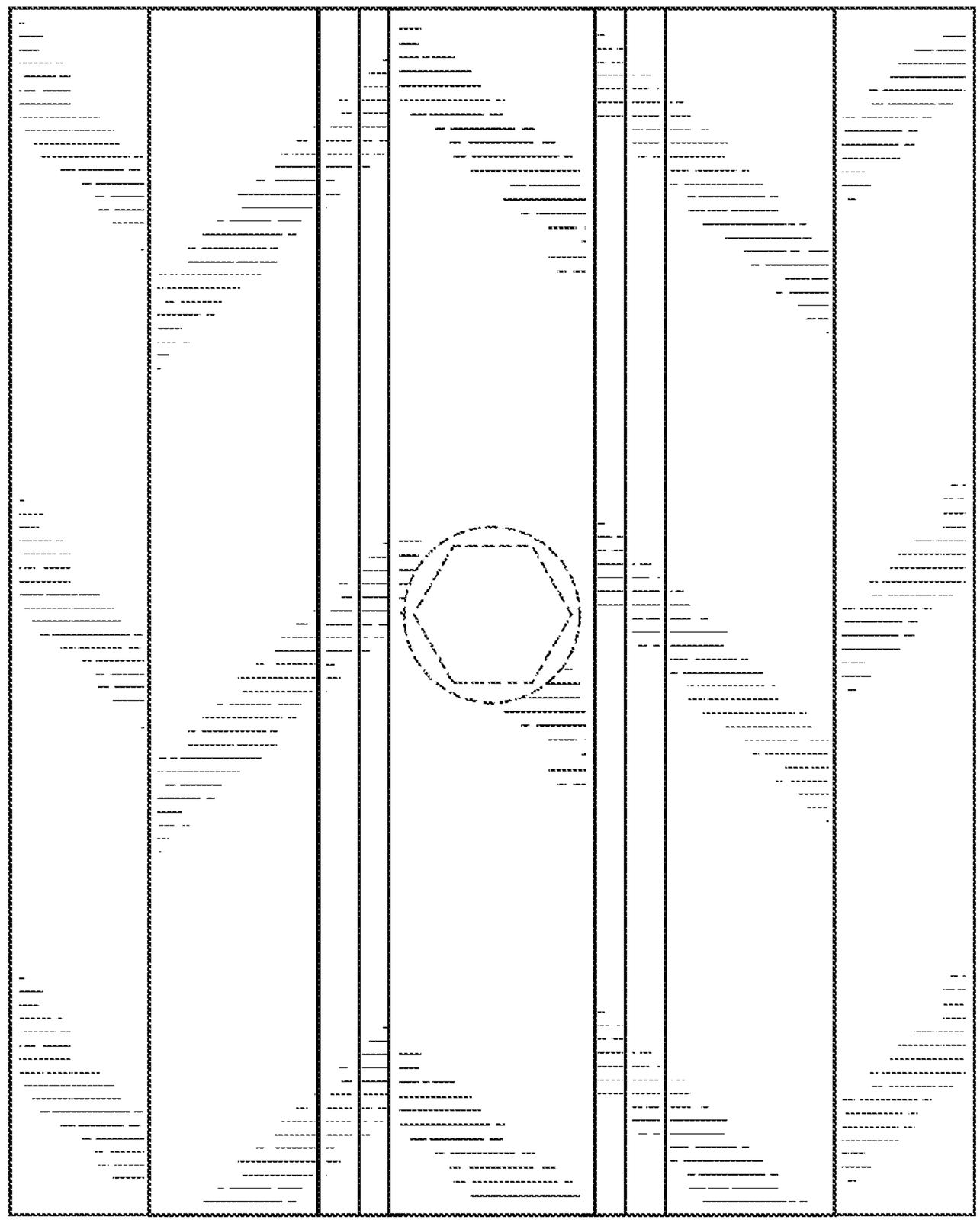

FIG. 4

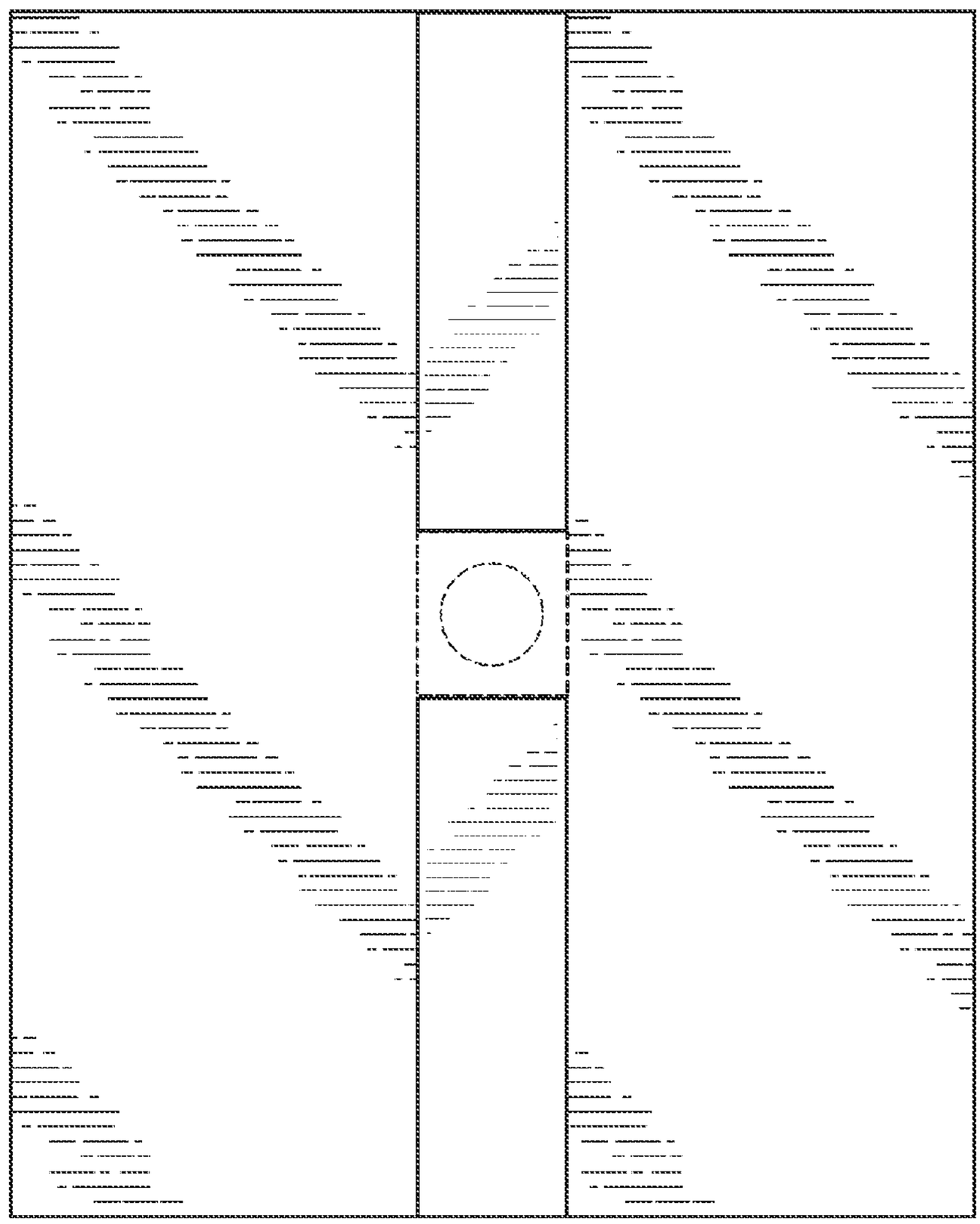

FIG. 5

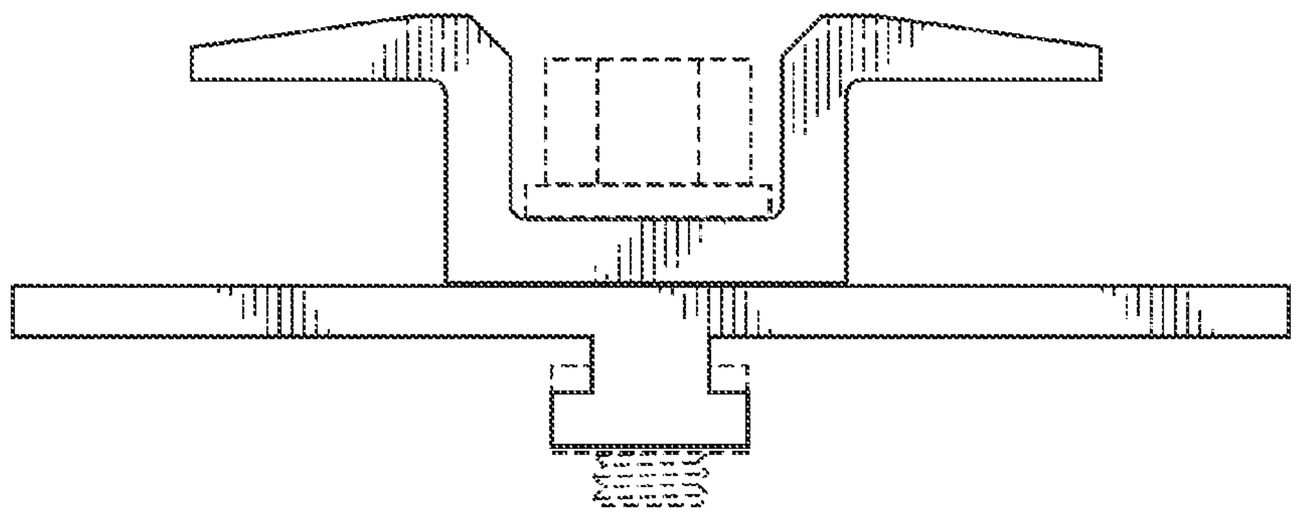

FIG. 6

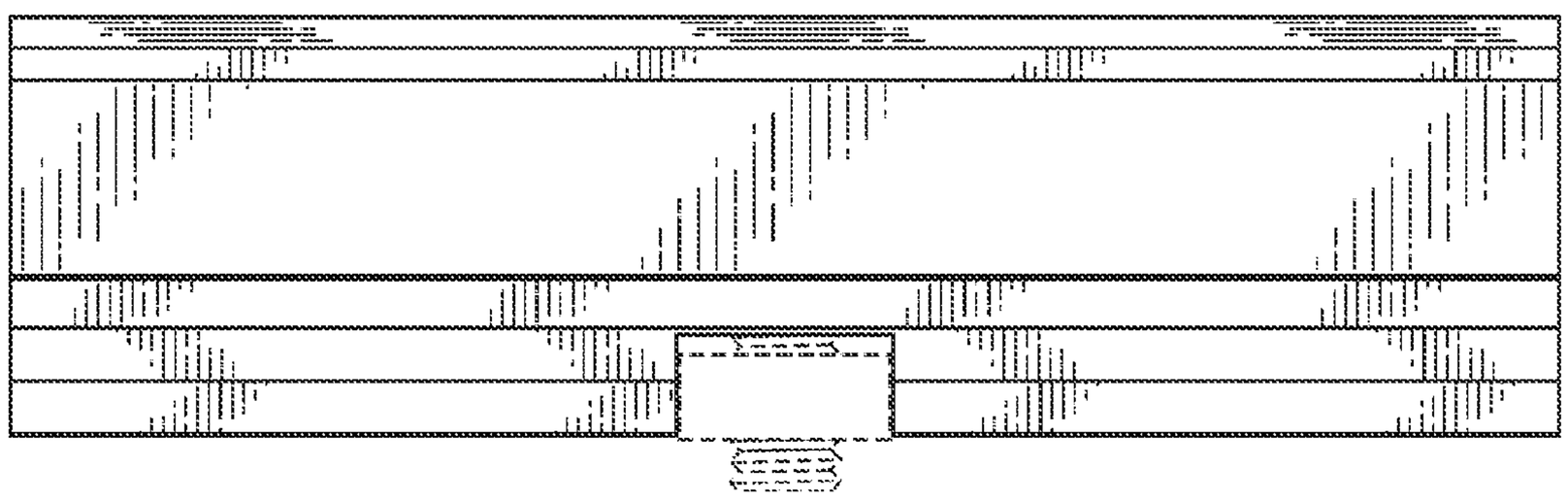

FIG. 7

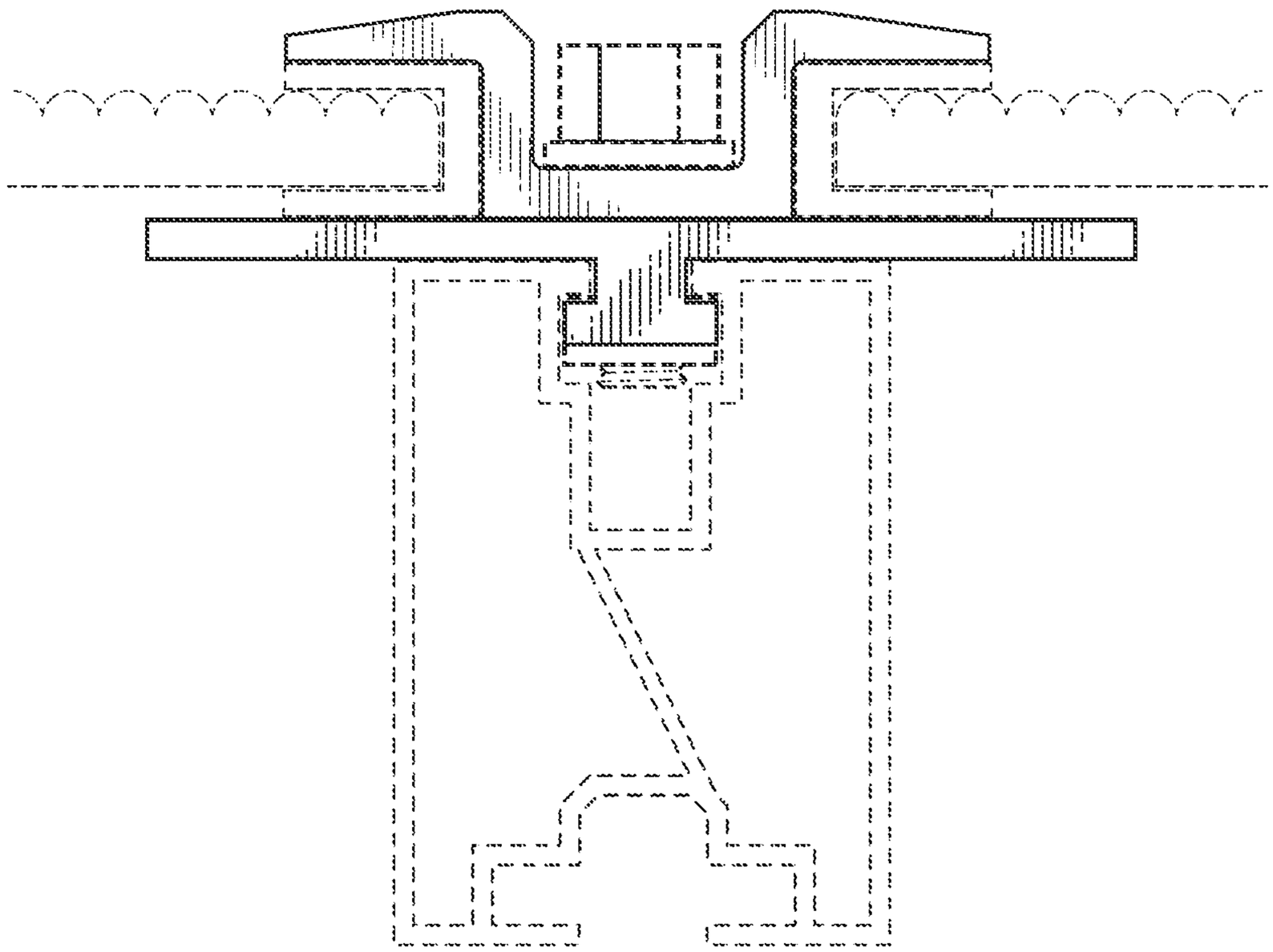

FIG. 8

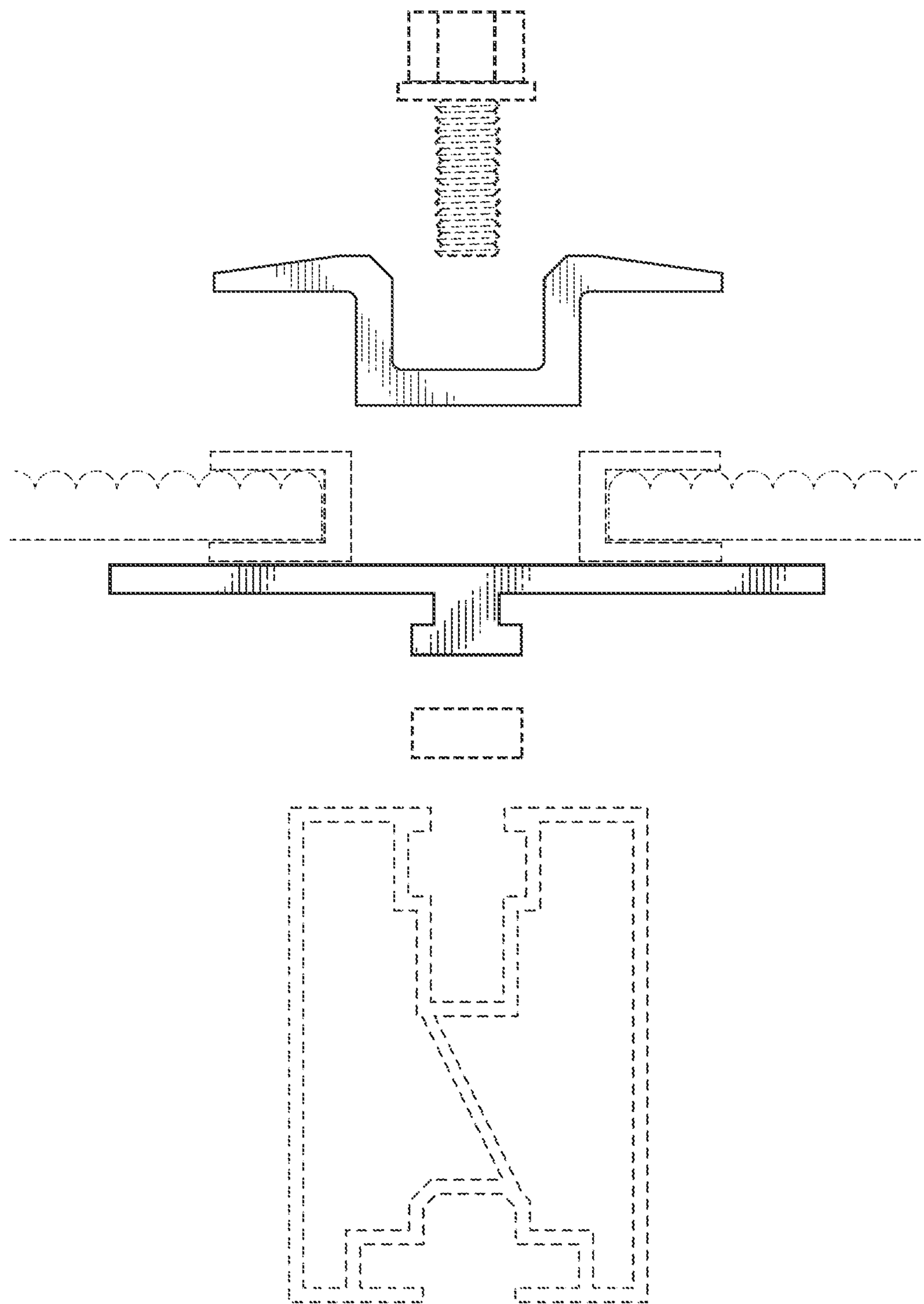

FIG. 9

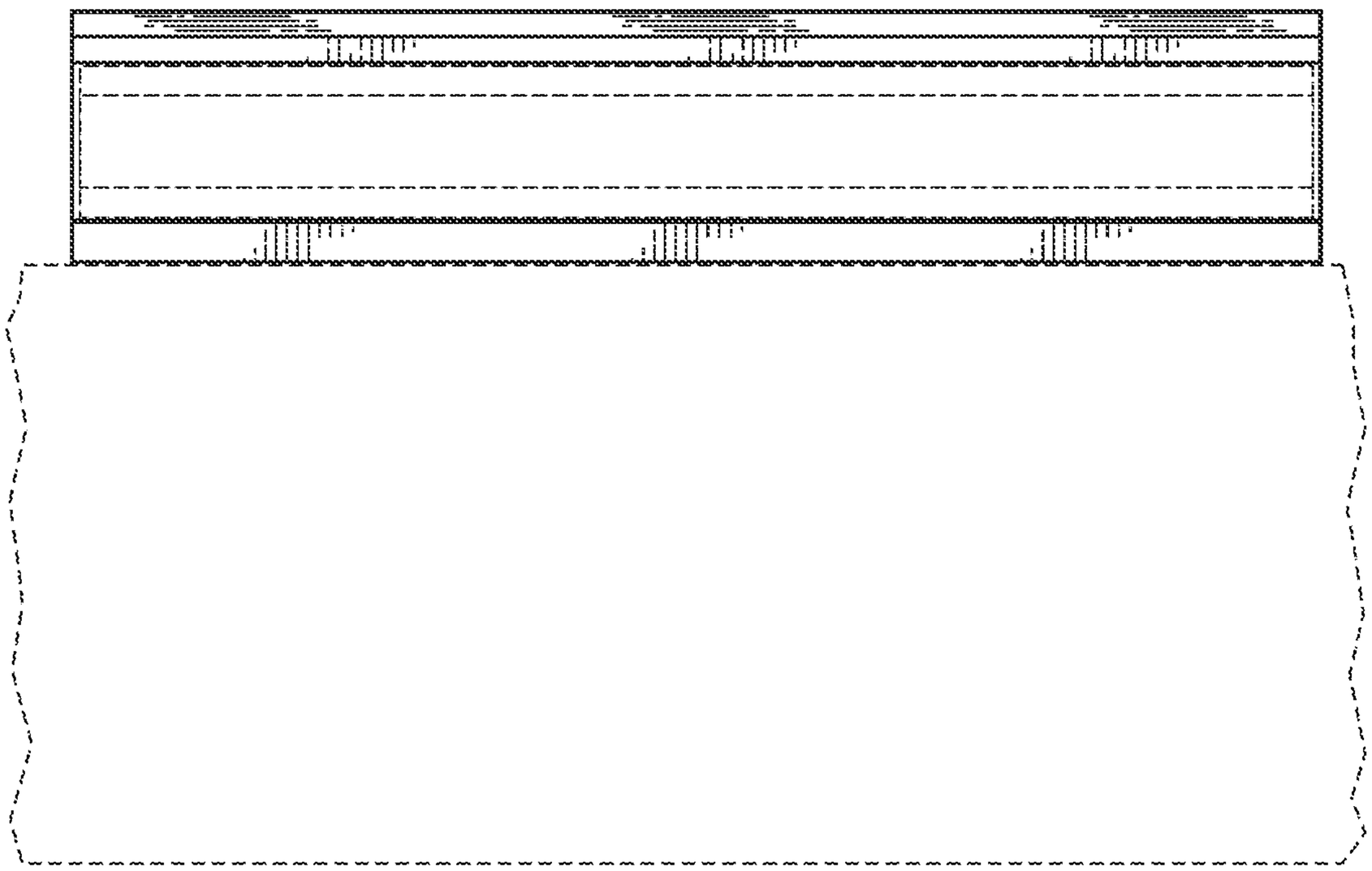

FIG. 10

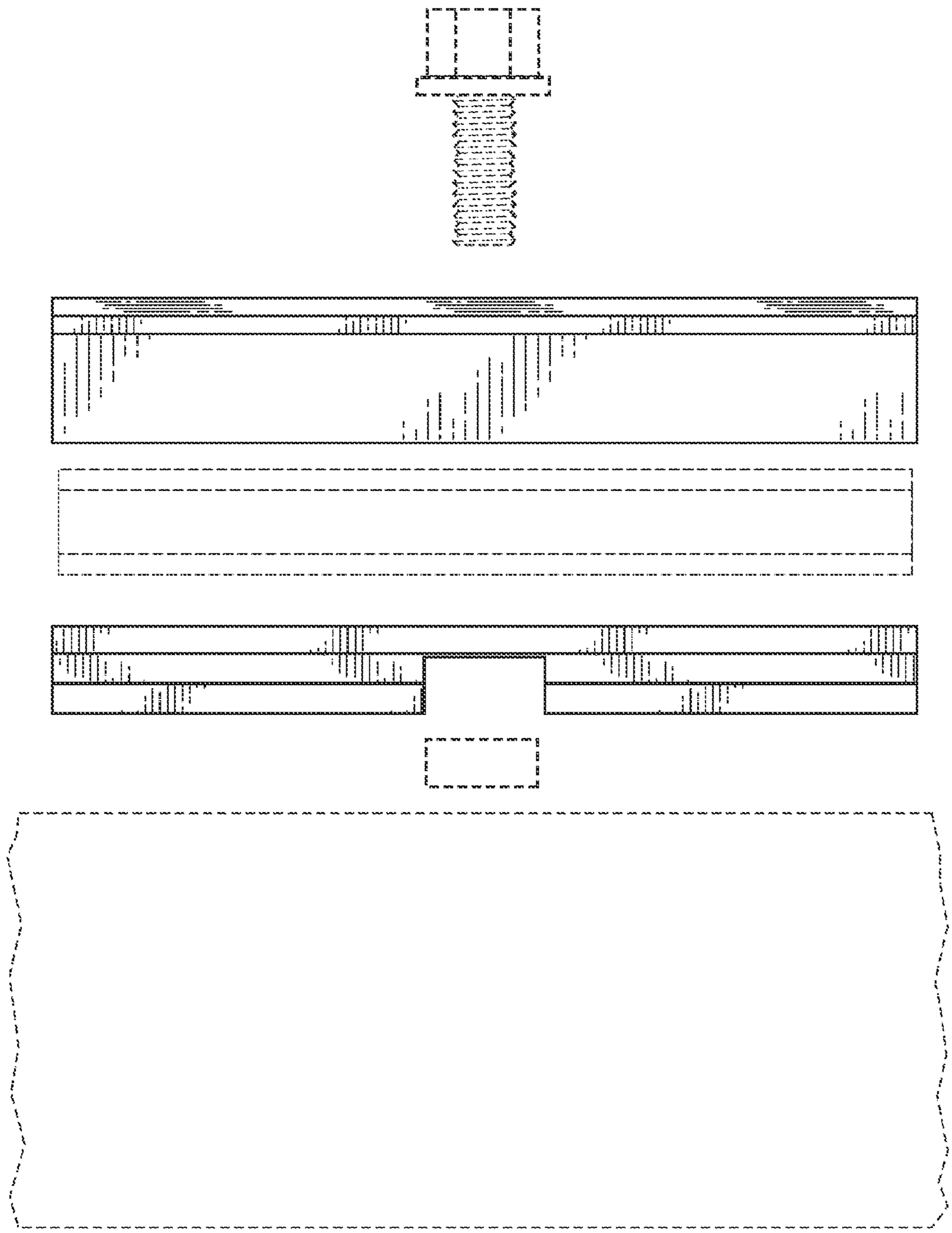

FIG. 11