US00D698621S

(12) United States Design Patent
Moreau et al.

(10) Patent No.: US D698,621 S
(45) Date of Patent: ** Feb. 4, 2014

(54) **DOUBLE SHACKLE WITH UNITARY RIGID BODY**

(71) Applicants: **Darrell A. Moreau**, Manchester, NH (US); **Andre W. Moreau**, Spring Hill, FL (US)

(72) Inventors: **Darrell A. Moreau**, Manchester, NH (US); **Andre W. Moreau**, Spring Hill, FL (US)

(73) Assignee: **Ty-Flot, Inc.**, Manchester, NH (US)

(**) Term: **14 Years**

(21) Appl. No.: **29/440,336**

(22) Filed: **Dec. 20, 2012**

(51) **LOC (10) Cl.** **08-07**

(52) **U.S. Cl.**
USPC **D8/333**; D8/339; D8/334

(58) **Field of Classification Search**
USPC ..... D8/330, 331, 334, 333, 343; 70/14, 20, 70/21, 22, 31, 51, 57.1, 233, 465, DIG. 3, 70/DIG. 4; 292/246, 70, 288
See application file for complete search history.

(56) **References Cited**

U.S. PATENT DOCUMENTS

809,511	A		1/1901	Lien	
1,646,546	A		10/1927	Larsen	
2,097,465	A		11/1937	Morrison	
3,274,879	A		9/1966	Poller	
3,754,418	A	*	8/1973	Miller	70/18
4,102,124	A	*	7/1978	Swager	59/86
5,046,881	A	*	9/1991	Swager	403/154
5,114,260	A	*	5/1992	Hart et al.	403/24
D351,778	S	*	10/1994	Kuo	D8/333
5,433,547	A		7/1995	Hart et al.	
5,642,635	A	*	7/1997	Wen-Chyun	70/46
5,687,701	A	*	11/1997	Henry	124/1

(Continued)

OTHER PUBLICATIONS

[Author unknown], Hammerlock Link Specification Sheet (as available Dec. 18, 2012).

(Continued)

Primary Examiner — Prabhakar Deshmukh
(74) *Attorney, Agent, or Firm* — Mesmer & Deleault, PLLC

(57) **CLAIM**

We claim the ornamental design for a double shackle with unitary rigid body, as shown and described.

DESCRIPTION

FIG. **1** is a front and left perspective view of a double shackle with unitary rigid body showing our new design;
FIG. **2** is a front and right perspective view thereof;
FIG. **3** is a top plan view thereof;
FIG. **4** is a right side elevational view thereof;
FIG. **5** is a front elevational view thereof;
FIG. **6** is a left side elevational view thereof;
FIG. **7** is a front and left perspective view thereof, shown with a rigid body and without the pin;
FIG. **8** is a front and right perspective view thereof, shown with a rigid body and without the pin;
FIG. **9** is a front elevational view of a pin, shown separately for clarity of illustration;
FIG. **10** is a left side elevational of FIG. **9**;
FIG. **11** is a front and left perspective view of FIG. **9**;
FIG. **12** is a front and right side perspective view of FIG. **9**;
FIG. **13** is a right side elevational view of FIG. **9**;
FIG. **14** is a front and left perspective view of a second embodiment of FIG. **1**; and,
FIG. **15** is a front and left perspective view of a third embodiment of FIG. **1**.
The rigid body in FIGS. **7** and **8** and pin in FIGS. **9-13** of the claimed design are shown separately for clarity of illustration.

1 Claim, 5 Drawing Sheets

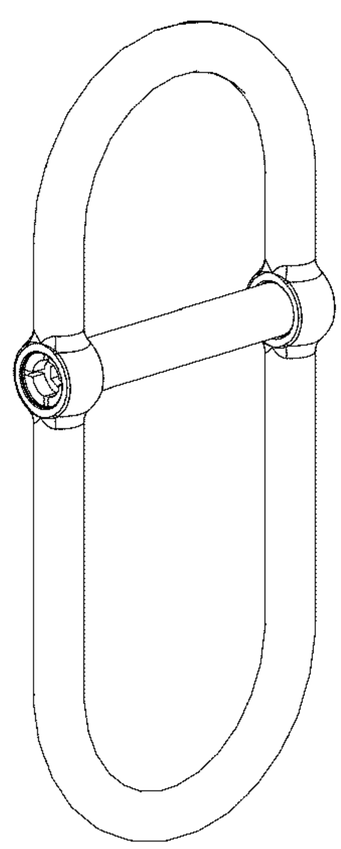

(56) **References Cited**

U.S. PATENT DOCUMENTS

D391,142	S	*	2/1998	Winner	D8/333
D398,830	S	*	9/1998	Winner	D8/333
D433,617	S	*	11/2000	Gray, Jr.	D8/356
D541,136	S	*	4/2007	Whinery	D8/333
7,393,033	B1		7/2008	Bisso, IV	

OTHER PUBLICATIONS

Columbus McKinnon Corp., CM Herc-Alloy 1000 Hammerlok, available at http://www.cmworks.com/ProductDetail.aspx?id=5086 (as available Jan. 28, 2013).

* cited by examiner

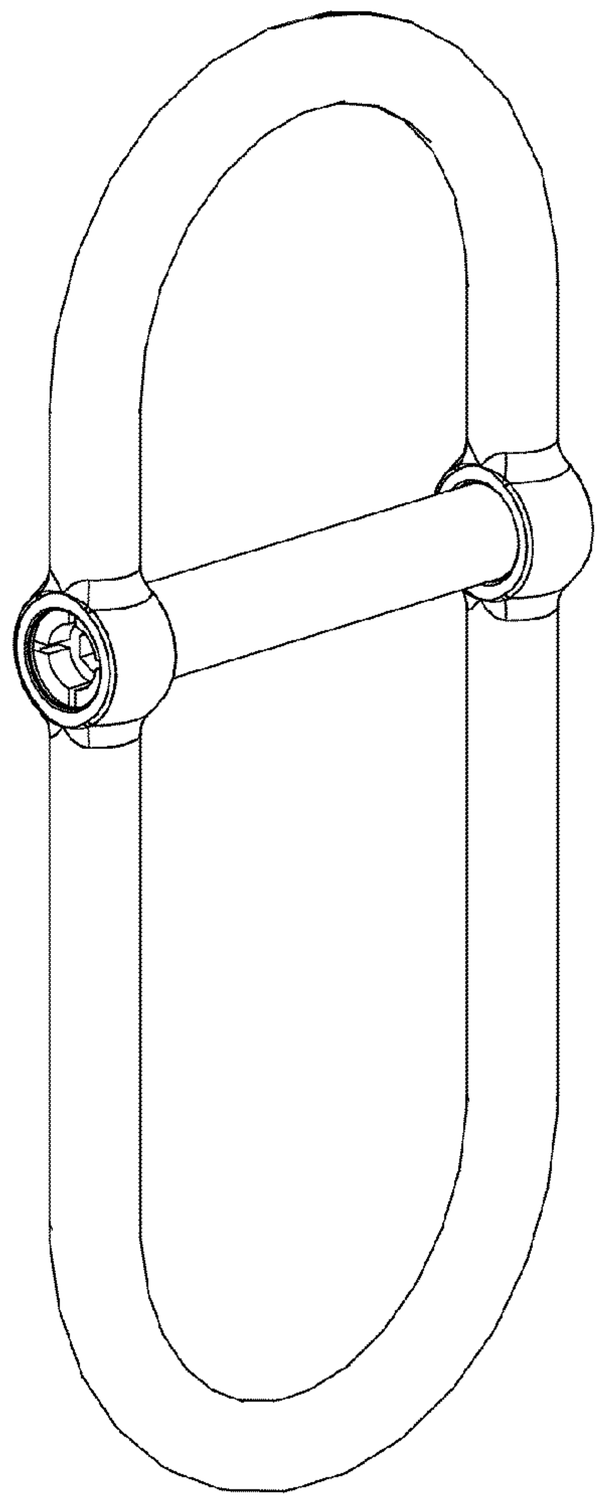

Fig. 1

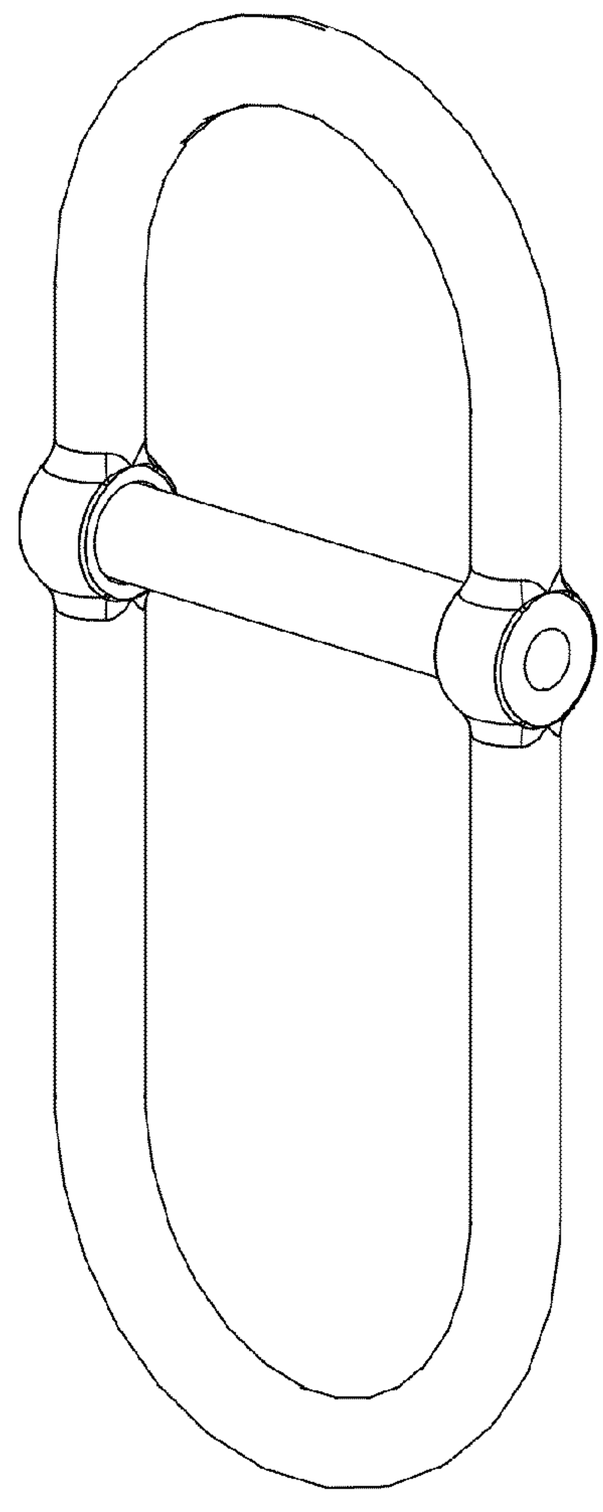

Fig. 2

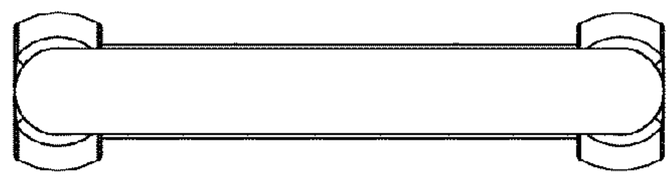

Fig. 3

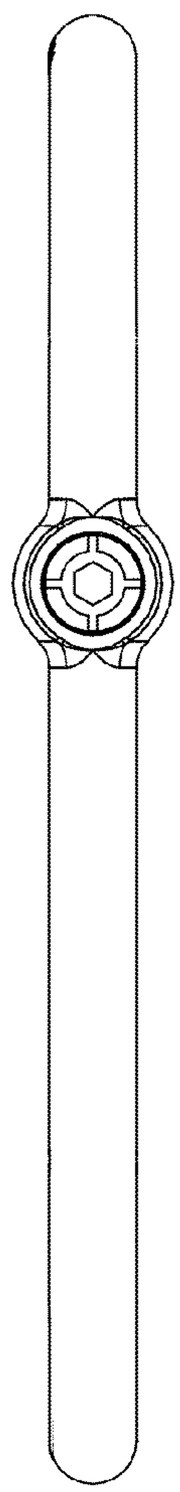

Fig. 4

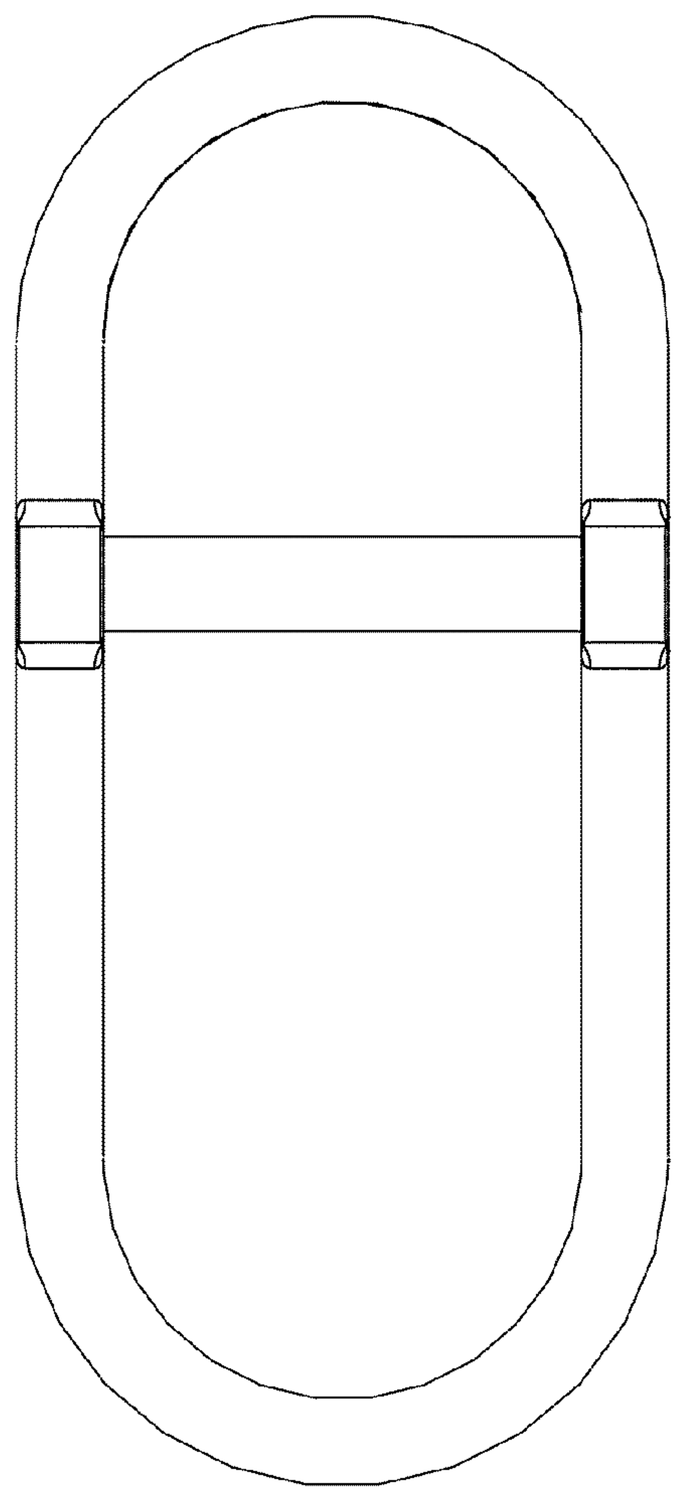

Fig. 5

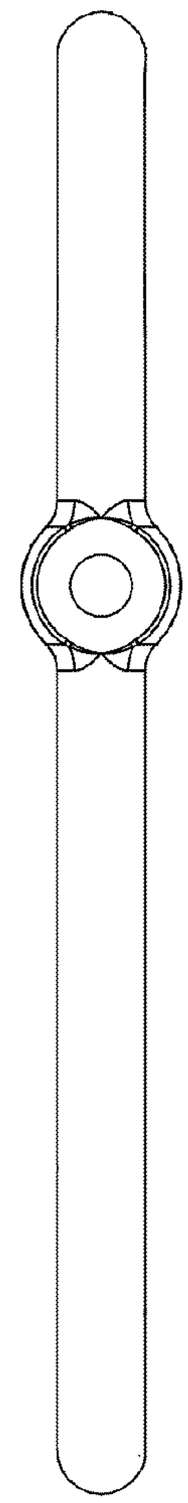

Fig. 6

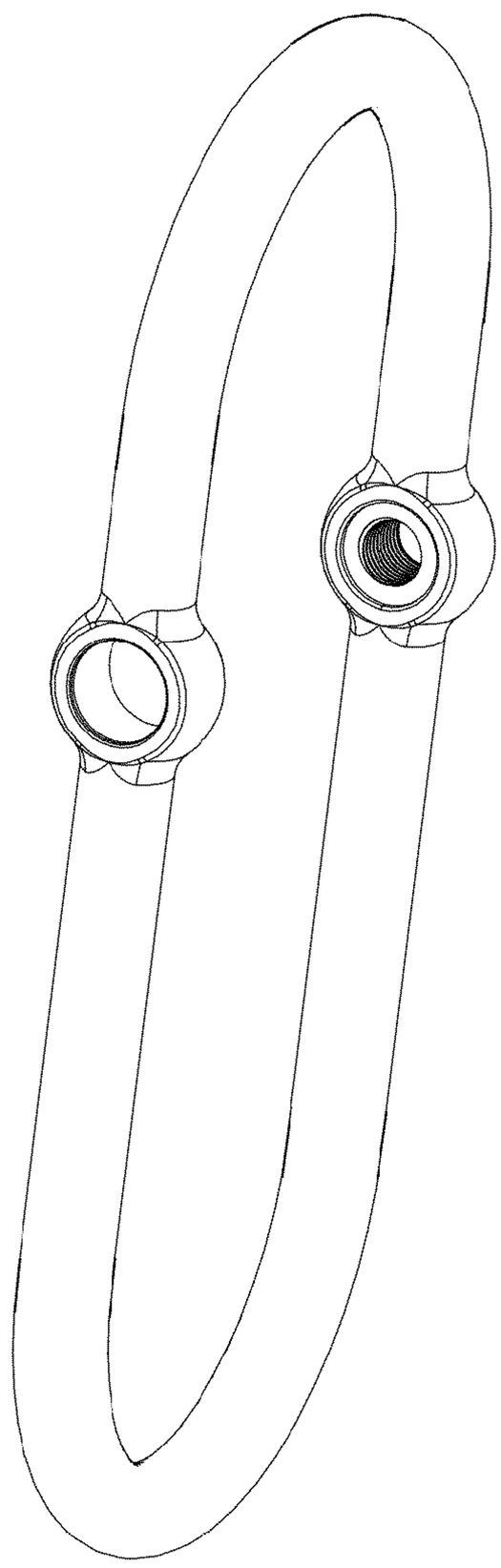

Fig. 7

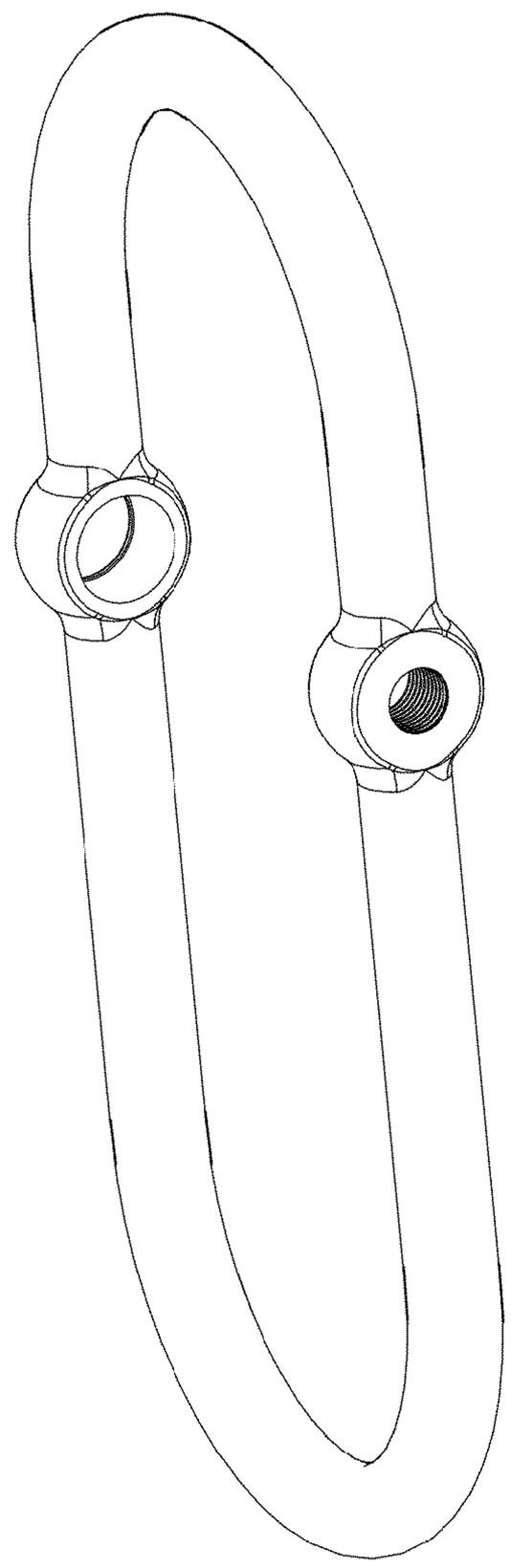

Fig. 8

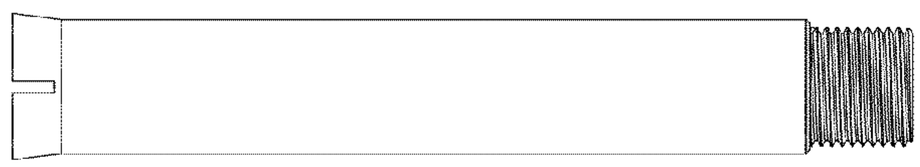

Fig. 9

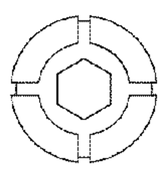

Fig. 10

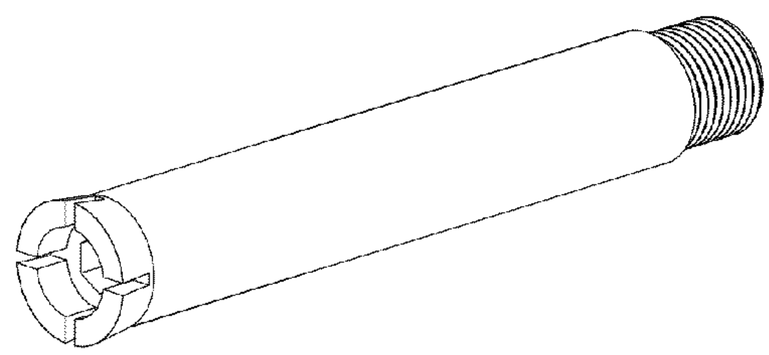

Fig. 11

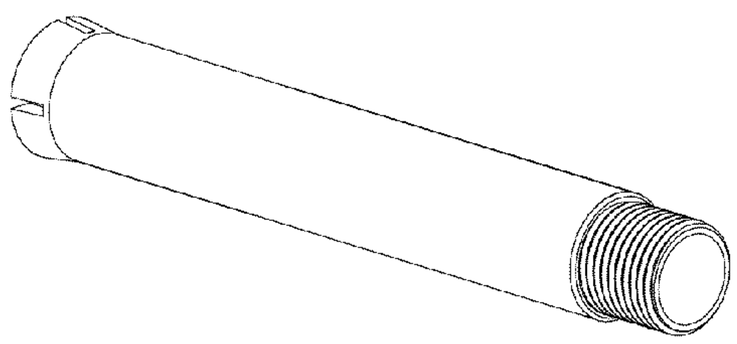

Fig. 12

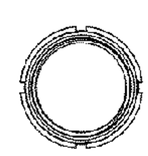

Fig. 13

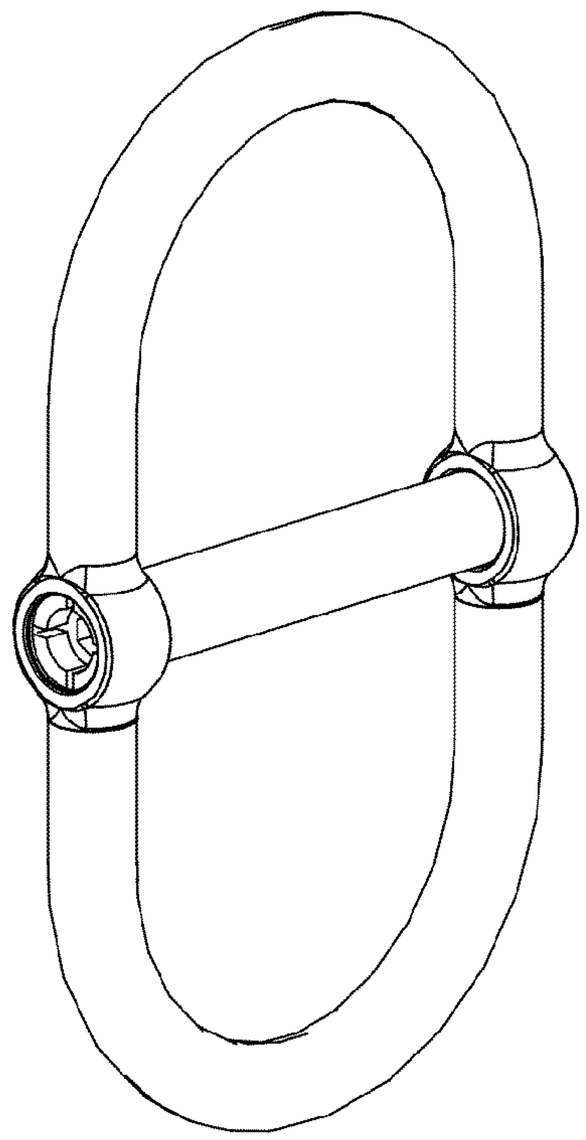

Fig. 14

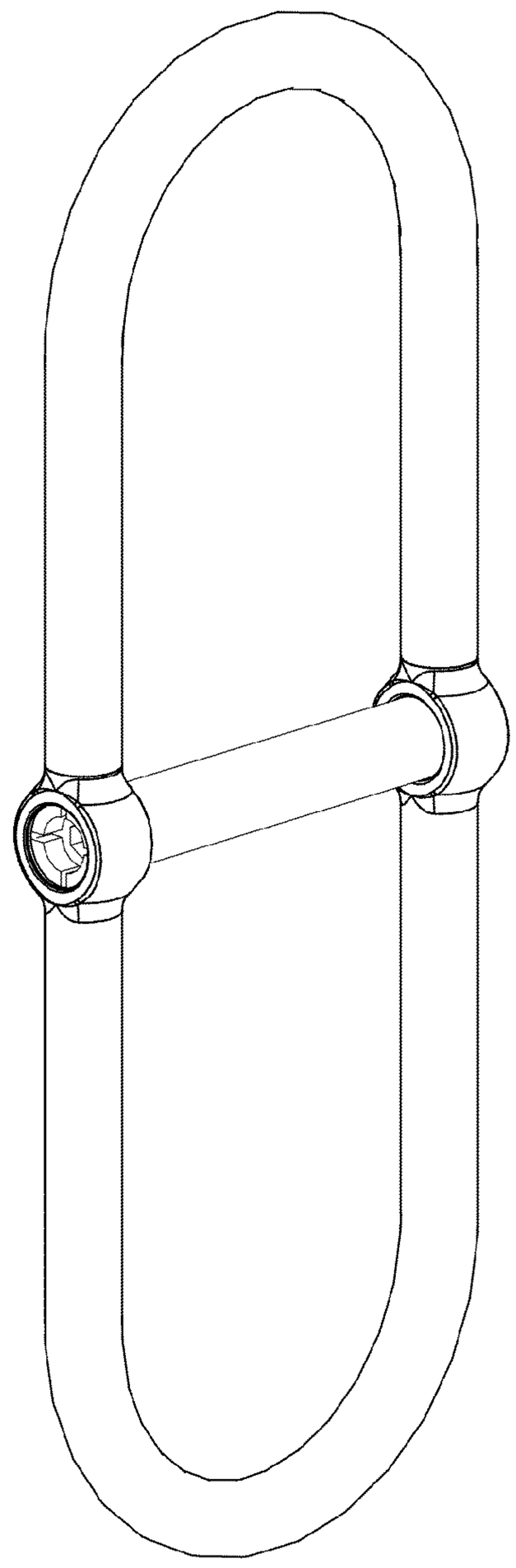

Fig. 15