US00D698509S

(12) United States Design Patent

Cho et al.

(10) Patent No.: US D698,509 S
(45) Date of Patent: ** Jan. 28, 2014

(54) **DETERGENT CASE FOR WASHING MACHINE**

(71) Applicant: **Samsung Electronics Co., Ltd.**, Gyeonggi-do (KR)

(72) Inventors: **Chul-Yong Cho**, Seoul (KR); **Jongsu Jeon**, Sungnamsi (KR); **Chris Bangle**, Clavesana (IT); **Seonju Lee**, Seoul (KR)

(73) Assignee: **Samsung Electronics Co., Ltd.**, Suwon-si (KR)

(**) Term: **14 Years**

(21) Appl. No.: **29/441,408**

(22) Filed: **Jan. 4, 2013**

(30) **Foreign Application Priority Data**

Dec. 27, 2012 (KR) 30-2012-0062552

(51) **LOC (10) Cl.** **15-05**

(52) **U.S. Cl.**
USPC **D32/29.1**

(58) **Field of Classification Search**
USPC ..... D32/1, 3, 25, 29.1; D3/203.2, 273; D6/542; 134/58 D, 93, 99.2, 200; 68/12.18, 17 R, 207, 212
See application file for complete search history.

(56) **References Cited**

U.S. PATENT DOCUMENTS

2,219,487	A	*	10/1940	Nyden	206/534.2
2,492,864	A	*	12/1949	Hermani	206/540
2,655,259	A	*	10/1953	Davoren	225/43
2,722,309	A	*	11/1955	Waterman	206/534.2
6,138,693	A	*	10/2000	Matz	134/57 D
D514,308	S	*	2/2006	Wahl et al.	D3/203.2
7,254,966	B2	*	8/2007	Kim et al.	68/17 R
D574,606	S	*	8/2008	Muhlhausen et al.	D3/203.2
D616,161	S	*	5/2010	Tridello et al.	D32/3
7,757,858	B2	*	7/2010	Cross	206/540
7,845,361	B1	*	12/2010	Verespej et al.	134/99.2
D663,498	S	*	7/2012	Jeon et al.	D32/29.1

* cited by examiner

Primary Examiner — T. Chase Nelson
Assistant Examiner — Kathleen M Sims
(74) *Attorney, Agent, or Firm* — Ladas & Parry LLP

(57) **CLAIM**

We claim the ornamental design for a detergent case for washing machine, as shown.

DESCRIPTION

FIG. **1** is a front/right-side/top perspective view of a detergent case for washing machine showing our new design;
FIG. **2** is a front elevational view thereof;
FIG. **3** is a rear elevational view thereof;
FIG. **4** is a left-side elevational view thereof;
FIG. **5** is a right-side elevational view thereof;
FIG. **6** is a top plan view thereof;
FIG. **7** is a bottom plan view thereof; and,
FIG. **8** is a referenced view thereof.
None of broken lines form a part of the claimed design.

1 Claim, 7 Drawing Sheets

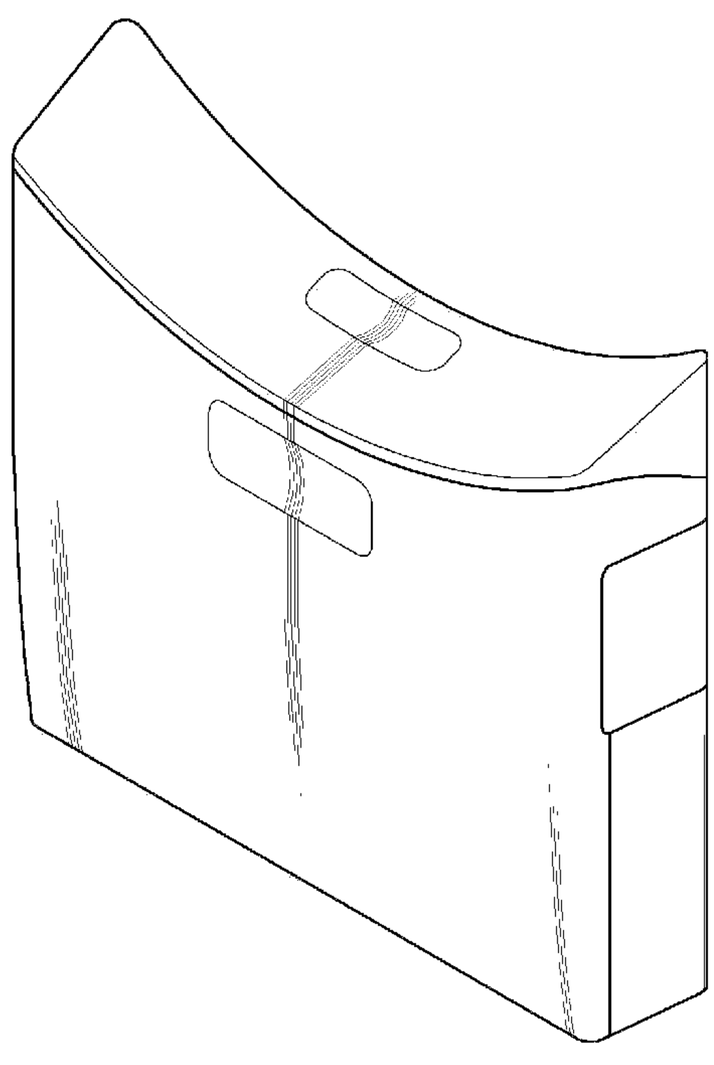

FIG. 1

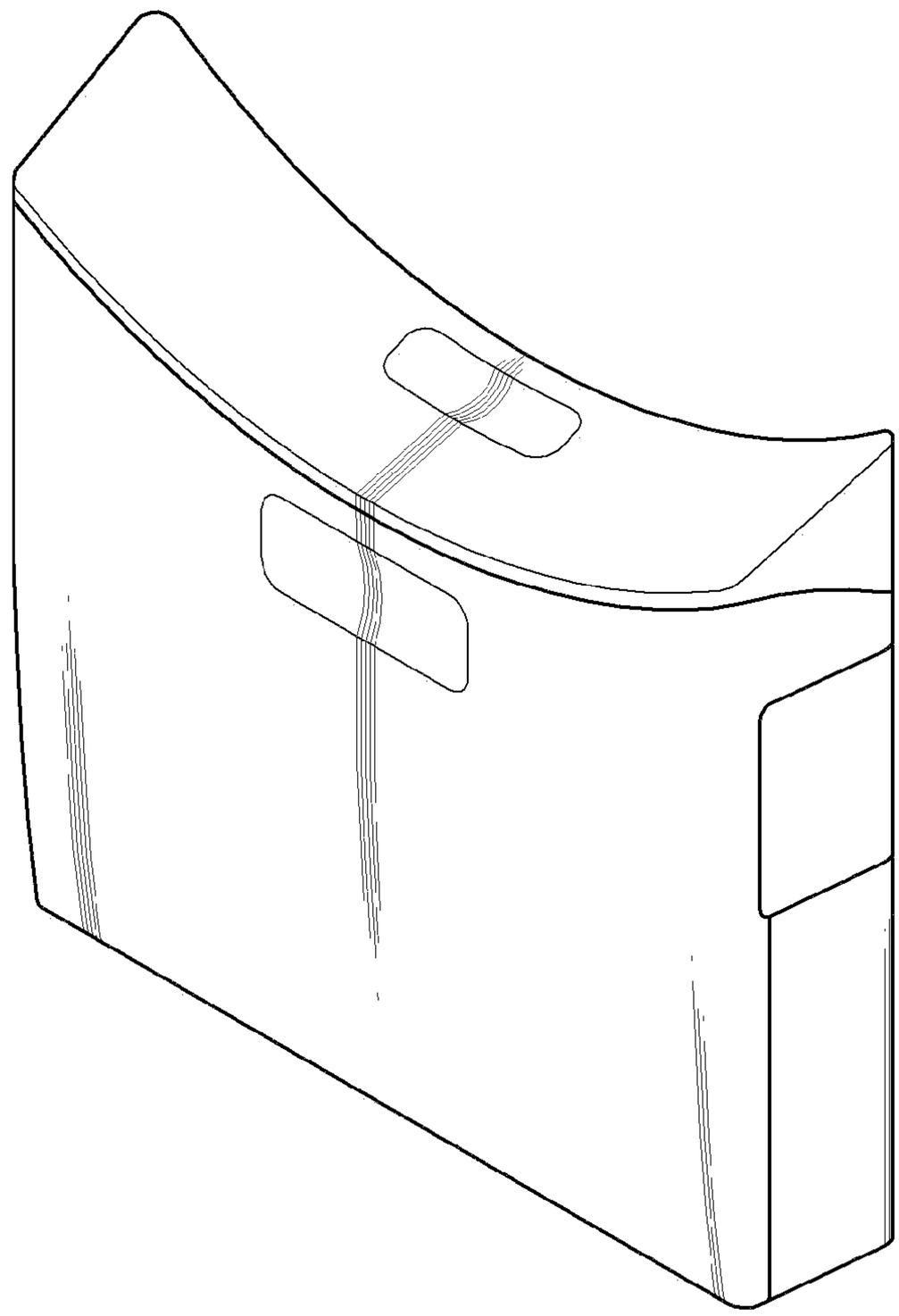

FIG. 2

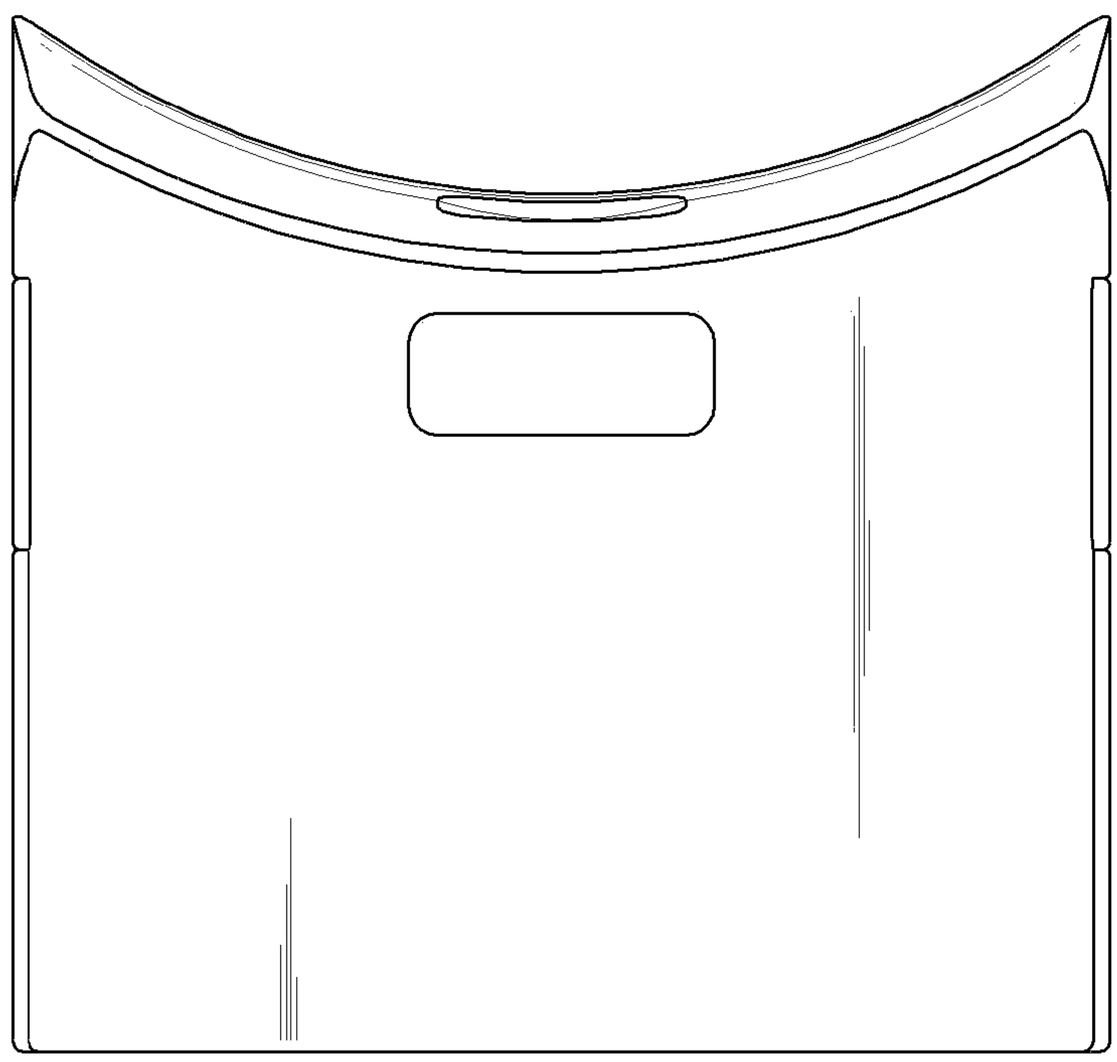

FIG. 3

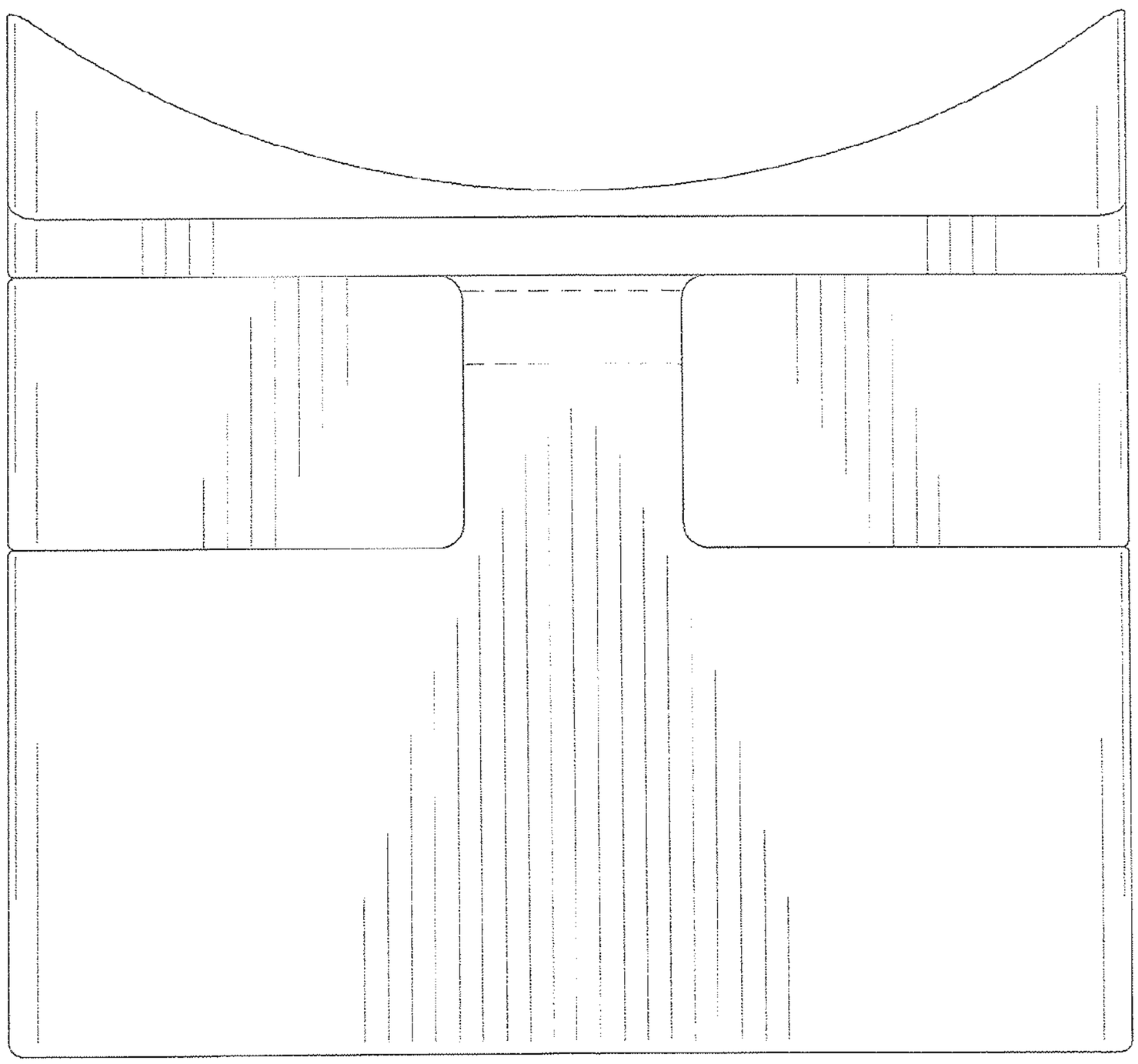

FIG. 4

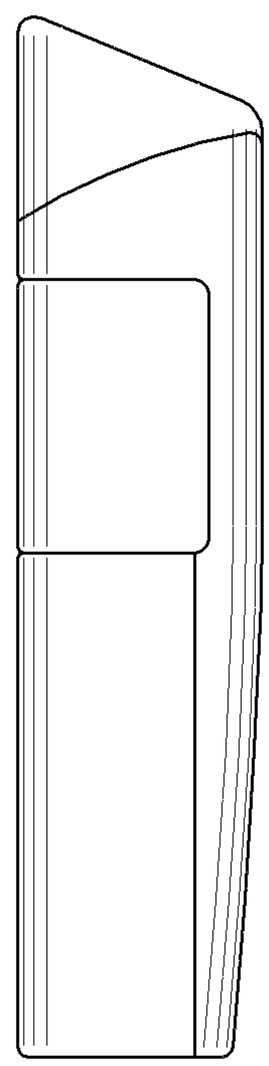

FIG. 5

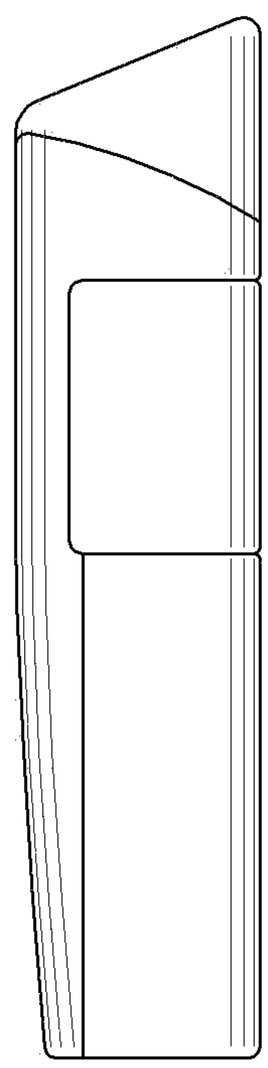

FIG. 6

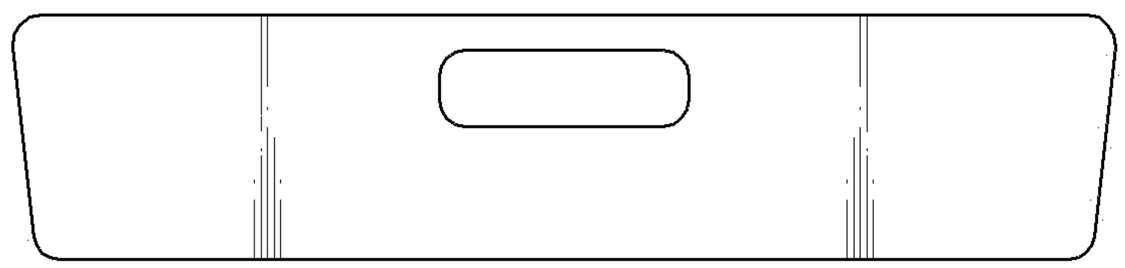

FIG. 7

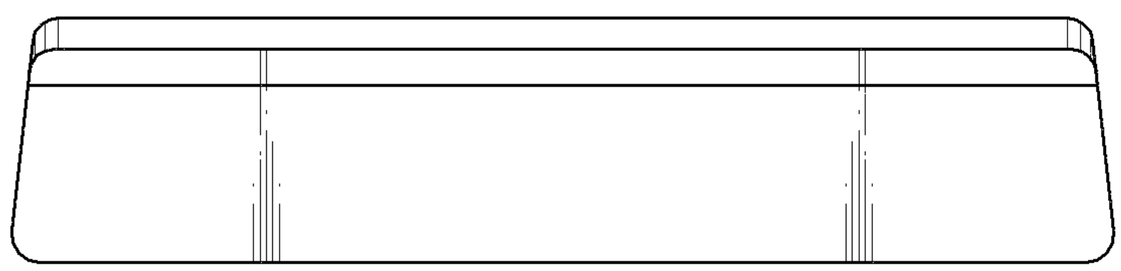
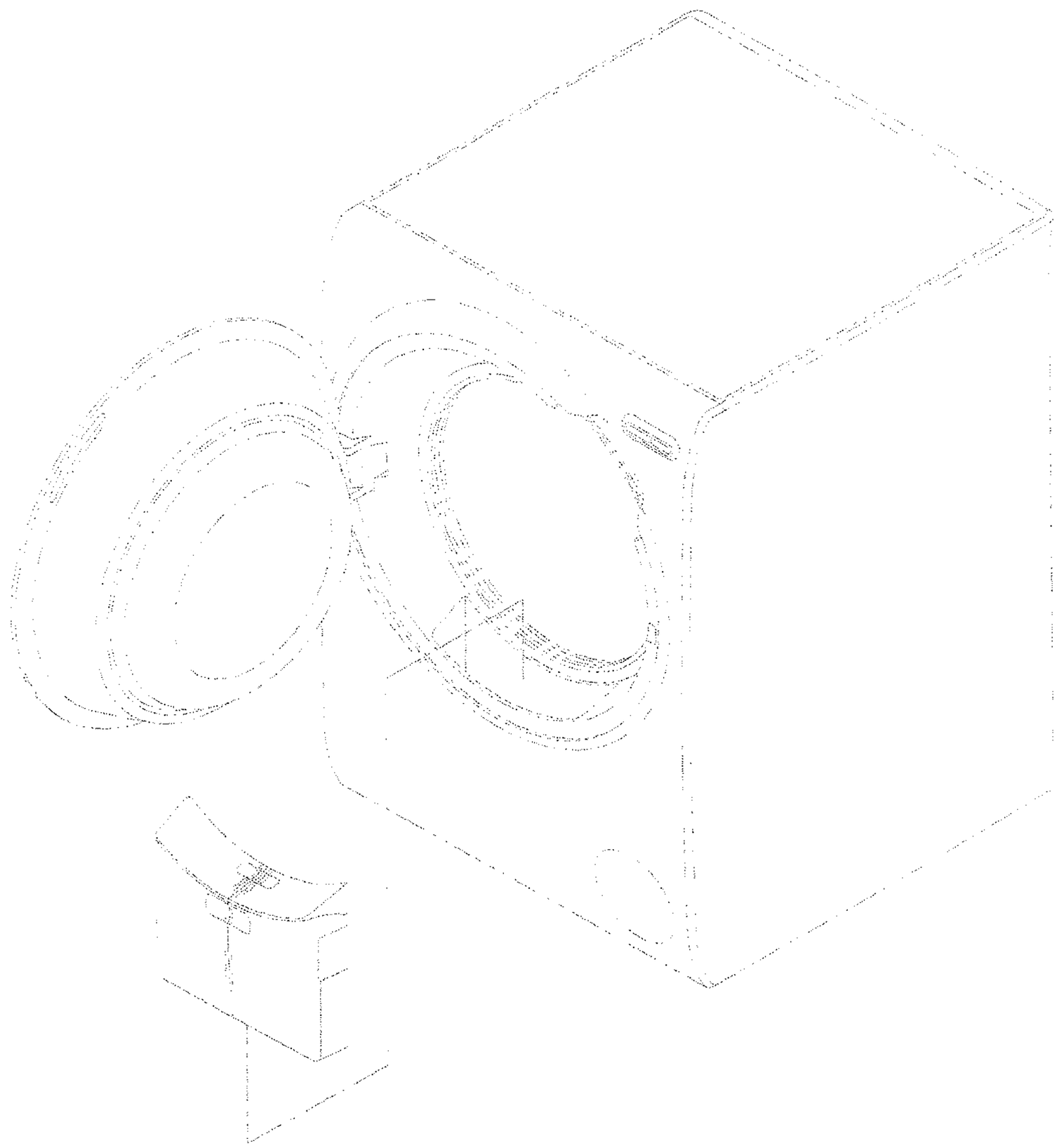
FIG. 8