US00D697919S

(12) United States Design Patent

Gelsomini et al.

(10) Patent No.: US D697,919 S
(45) Date of Patent: ** Jan. 21, 2014

(54) **TABLET STAND WITH BALL JOINT**

(71) Applicant: **Dundee Precious Metals Inc.**, Toronto (CA)

(72) Inventors: **Mark Gelsomini**, Richmond Hill (CA); **Richard Coulson**, Markham (CA)

(73) Assignee: **Dundee Precious Metals Inc.**, Toronto (CA)

(**) Term: **14 Years**

(21) Appl. No.: **29/437,975**

(22) Filed: **Nov. 22, 2012**

(51) **LOC (10) Cl.** **08-07**

(52) **U.S. Cl.**
USPC **D14/447**

(58) **Field of Classification Search**
USPC D14/447, 432, 433, 439, 440, 451, 452, D14/239, 217, 224.1, 251, 252, 253, 457, D14/458, 459, 460, 461, 434, 205, 209.1, D14/223; D6/406.1, 406.2, 406.3, 406.4, D6/406.5, 406.6; D12/415; 361/679.09, 361/679.21, 679.22, 679.24, 679.26, 361/679.27, 679.28, 679.3, 679.55, 679.56, 361/709; 248/917–924, 133, 136, 139, 150, 248/176.1, 188.6; D13/108, 110; D8/363; D21/333
See application file for complete search history.

(56) **References Cited**

U.S. PATENT DOCUMENTS

D309,307 S * 7/1990 Sigurdson D14/251
D356,074 S * 3/1995 Coblentz et al. D14/457

(Continued)

Primary Examiner — Angela J Lee
(74) *Attorney, Agent, or Firm* — Gowling Lafleur Henderson LLP

(57) **CLAIM**

The ornamental design for a tablet stand with ball joint, as shown and described.

DESCRIPTION

FIG. **1** is an isometric front view of a tablet stand with ball joint showing the new design;
FIG. **2** is a front view of the design of FIG. **1**;
FIG. **3** is a right side view of the design of FIG. **1**;
FIG. **4** is a left side view of the design of FIG. **1**;
FIG. **5** is a top view of the design of FIG. **1**;
FIG. **6** is a bottom view of the design of FIG. **1**;
FIG. **7** is a back view of the design of FIG. **1**;
FIG. **8** is an isometric back view of the design of FIG. **1**;
FIG. **9** is an isometric front view of the design of FIG. **1** showing a tablet as additional environment;
FIG. **10** is an isometric front view of a tablet stand with ball joint showing a first alternative embodiment of the new design;
FIG. **11** is a front view of the design of FIG. **10**;
FIG. **12** is a right side view of the design of FIG. **10**;
FIG. **13** is a left side view of the design of FIG. **10**;
FIG. **14** is a top view of the design of FIG. **10**;
FIG. **15** is a bottom view of the design of FIG. **10**;
FIG. **16** is a back view of the design of FIG. **10**; and,
FIG. **17** is an isometric back view of the design of FIG. **10**.
The broken lines showing selected portions of the tablet stand with ball joint and the tablet in FIG. **9**, is for environmental purposes only and forms no part of the claimed design.

1 Claim, 17 Drawing Sheets

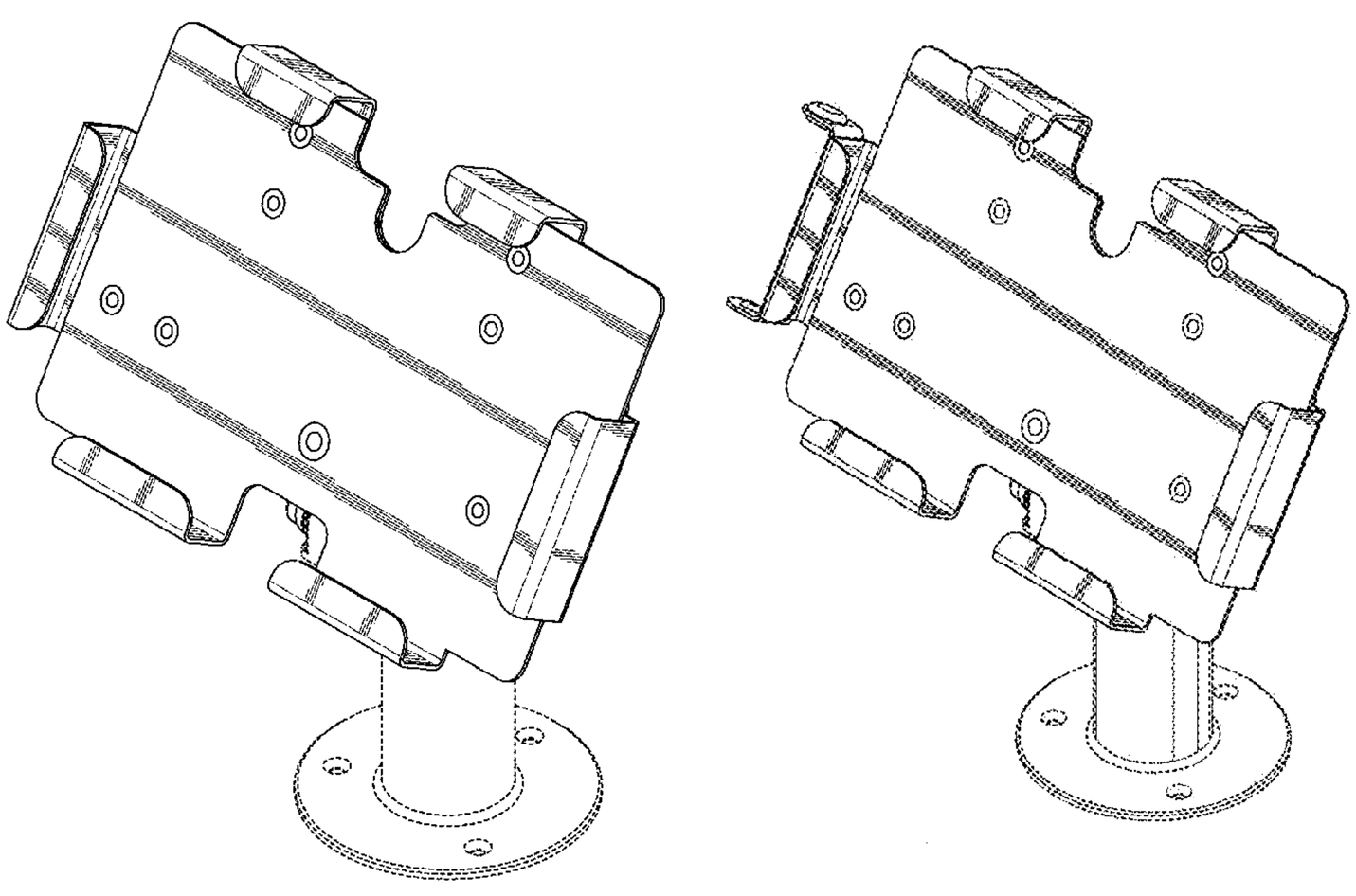

(56) **References Cited**

U.S. PATENT DOCUMENTS

D549,709	S	*	8/2007	Richter	D14/447
D603,322	S	*	11/2009	Nicieja	D12/415
D614,613	S	*	4/2010	Kim et al.	D14/253
D629,405	S	*	12/2010	Crysell	D14/447
D646,315	S	*	10/2011	Orf	D16/242
D650,372	S	*	12/2011	Molter	D14/239
D650,774	S	*	12/2011	Molter	D14/239
8,240,628	B2	*	8/2012	Huang	248/316.1
D669,481	S	*	10/2012	Prescott et al.	D14/447
D671,110	S	*	11/2012	Choi	D14/253
D684,980	S	*	6/2013	Chun	D14/447

* cited by examiner

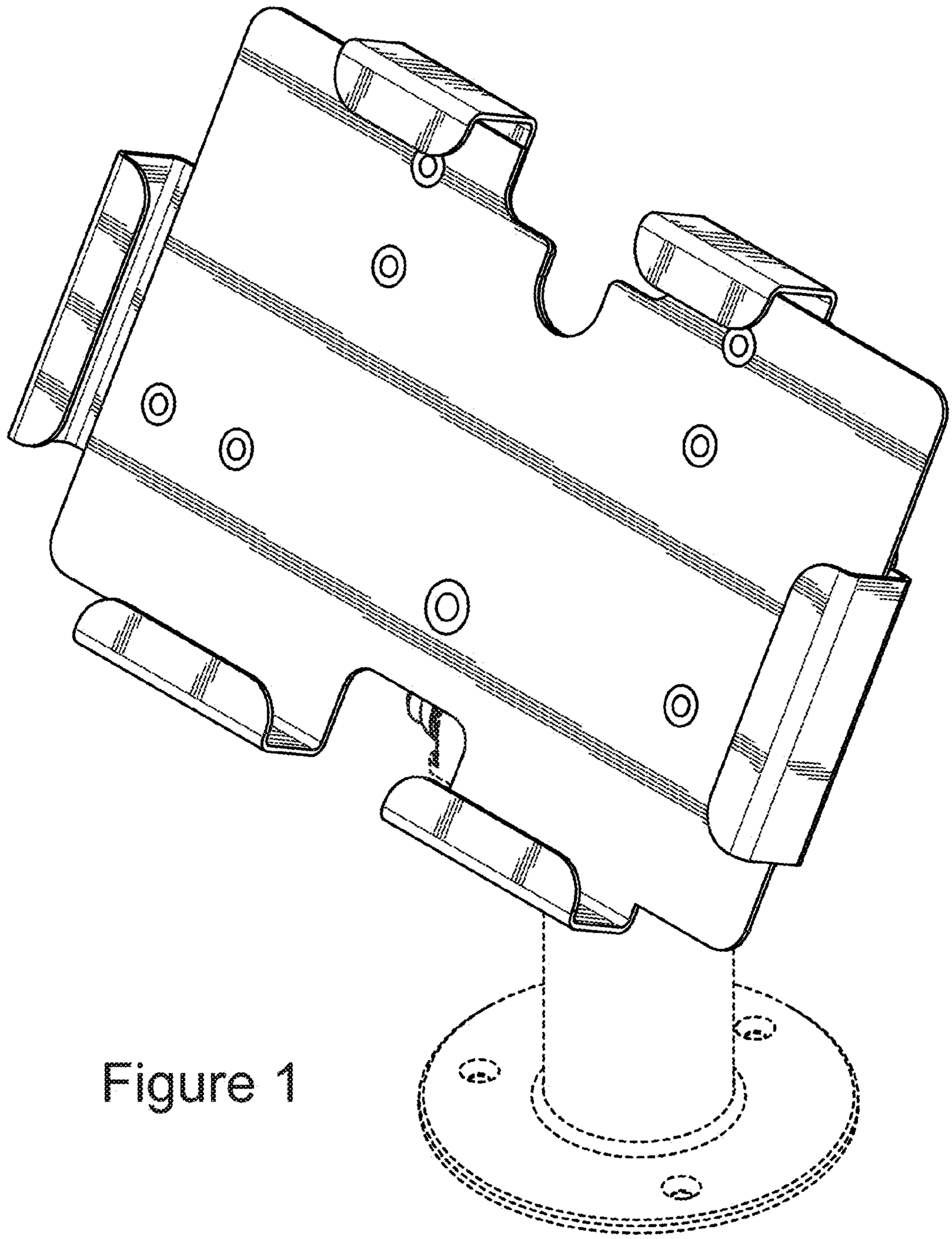

Figure 1

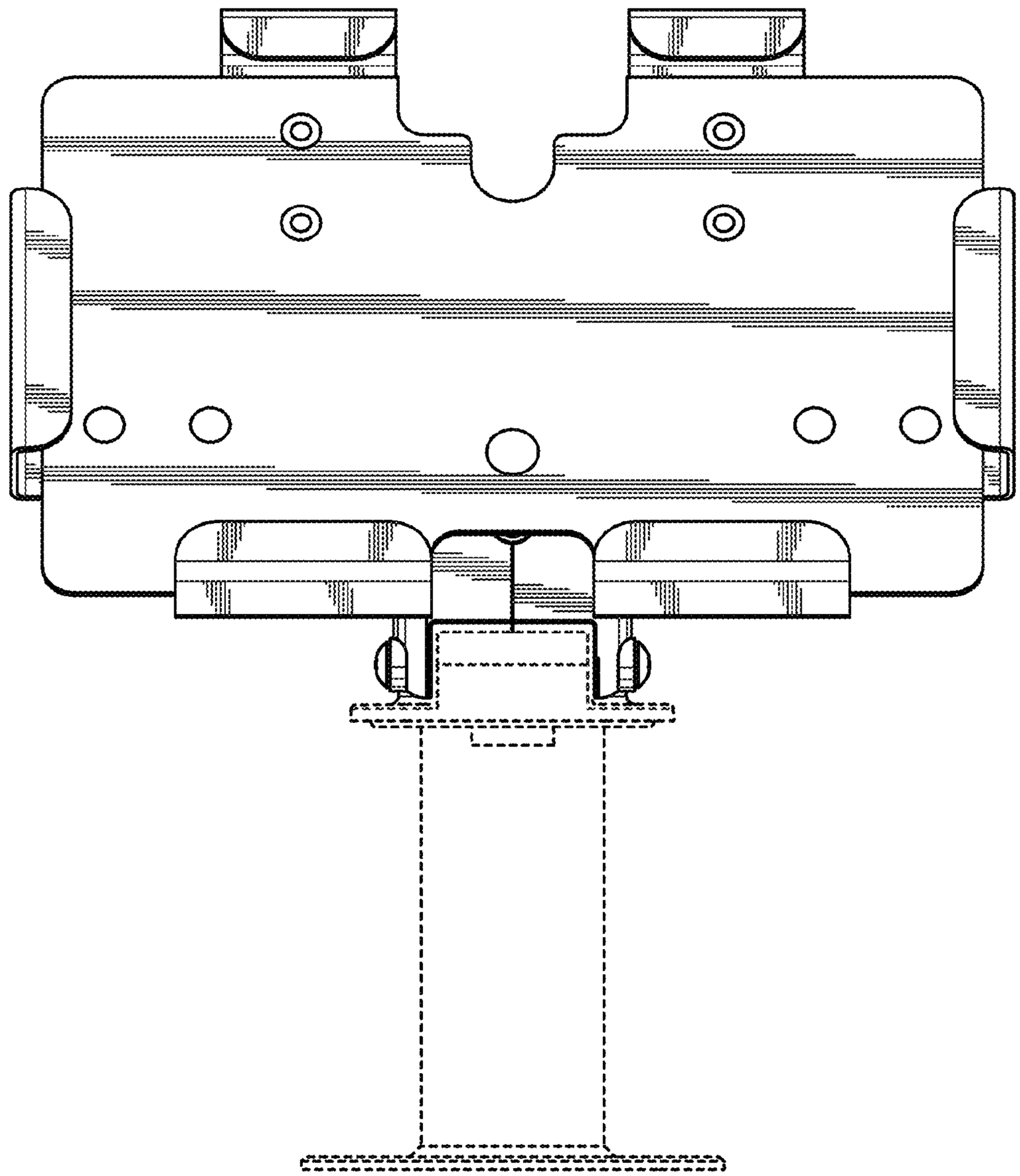

Figure 2

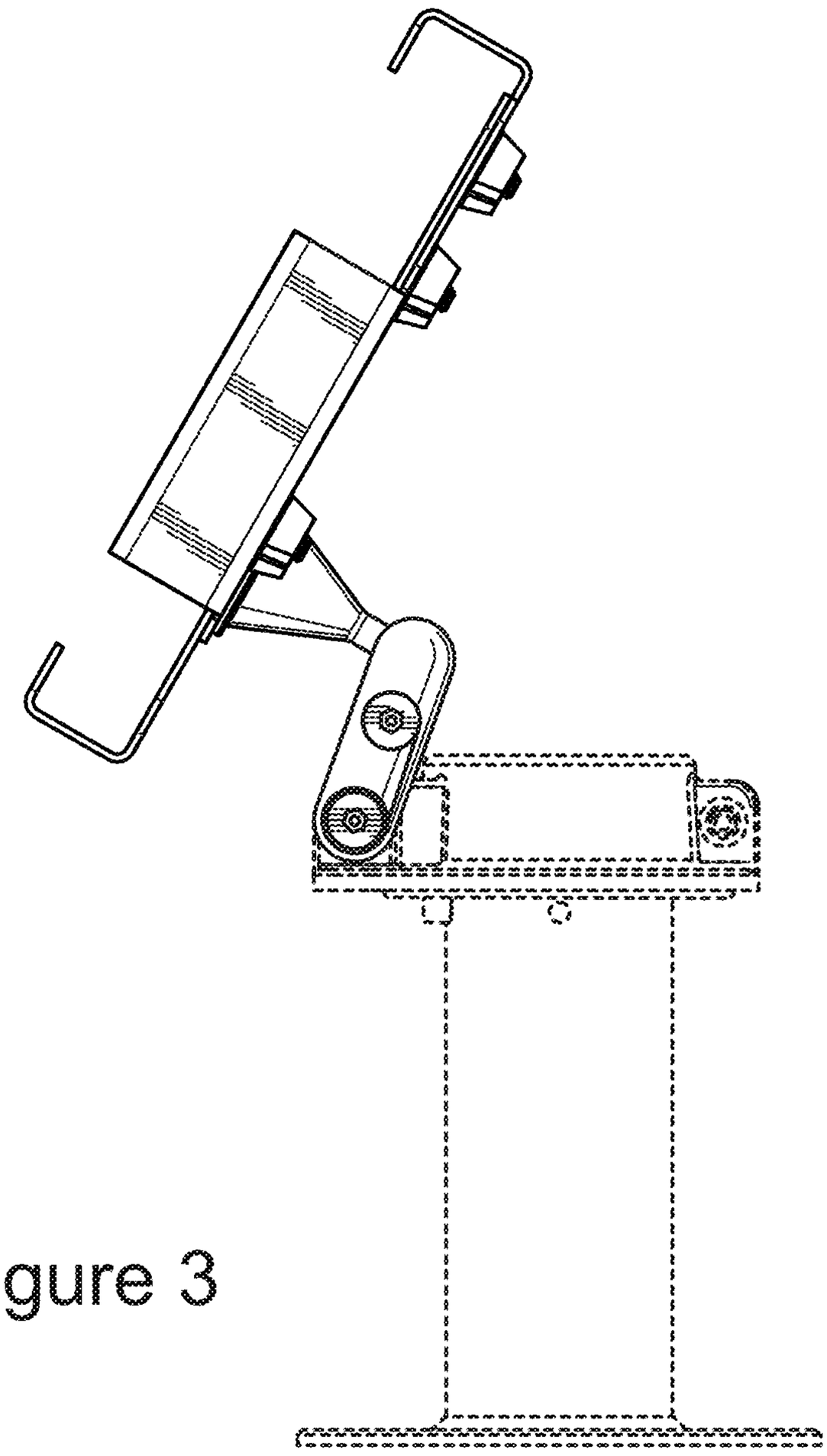

Figure 3

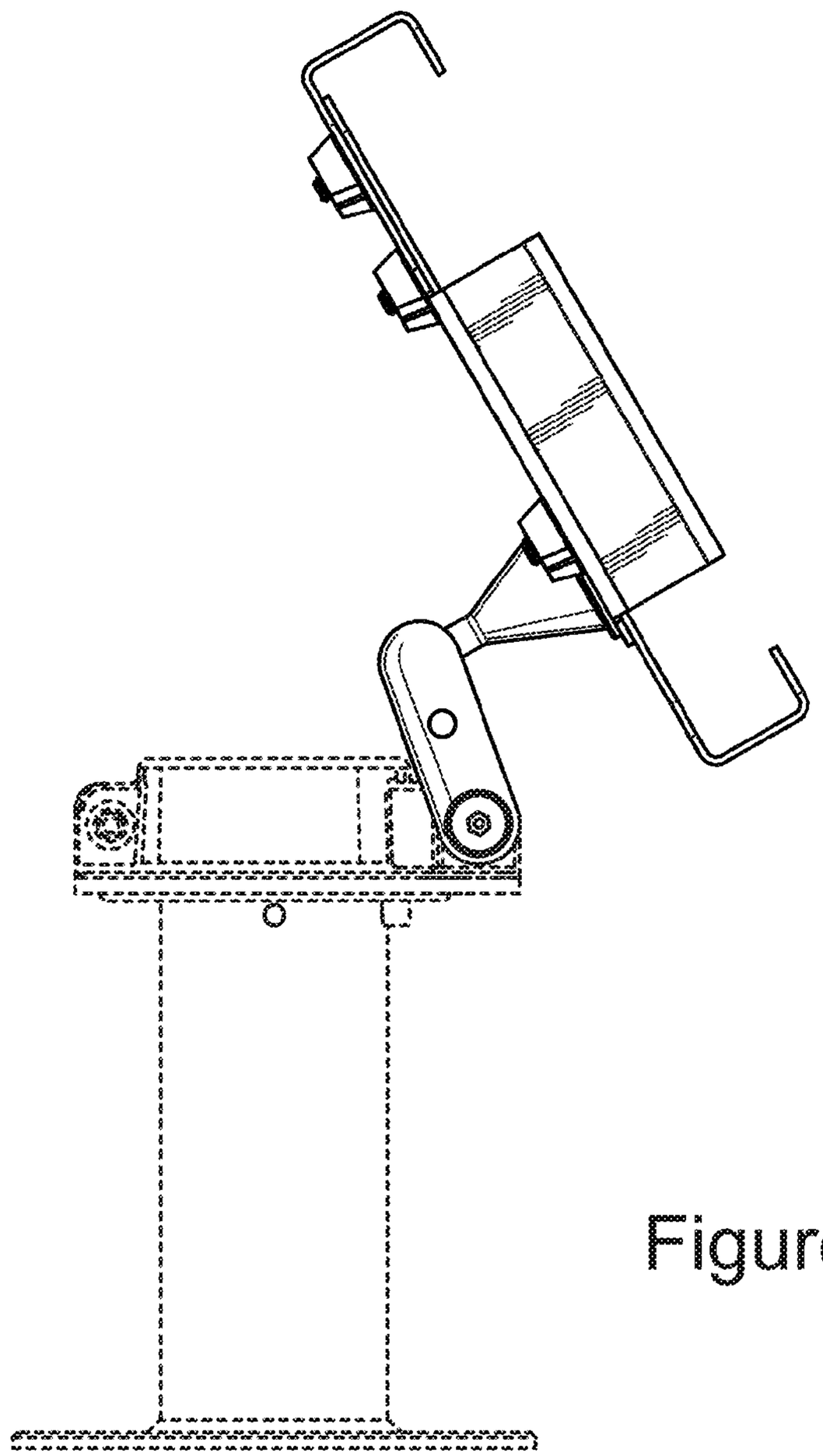

Figure 4

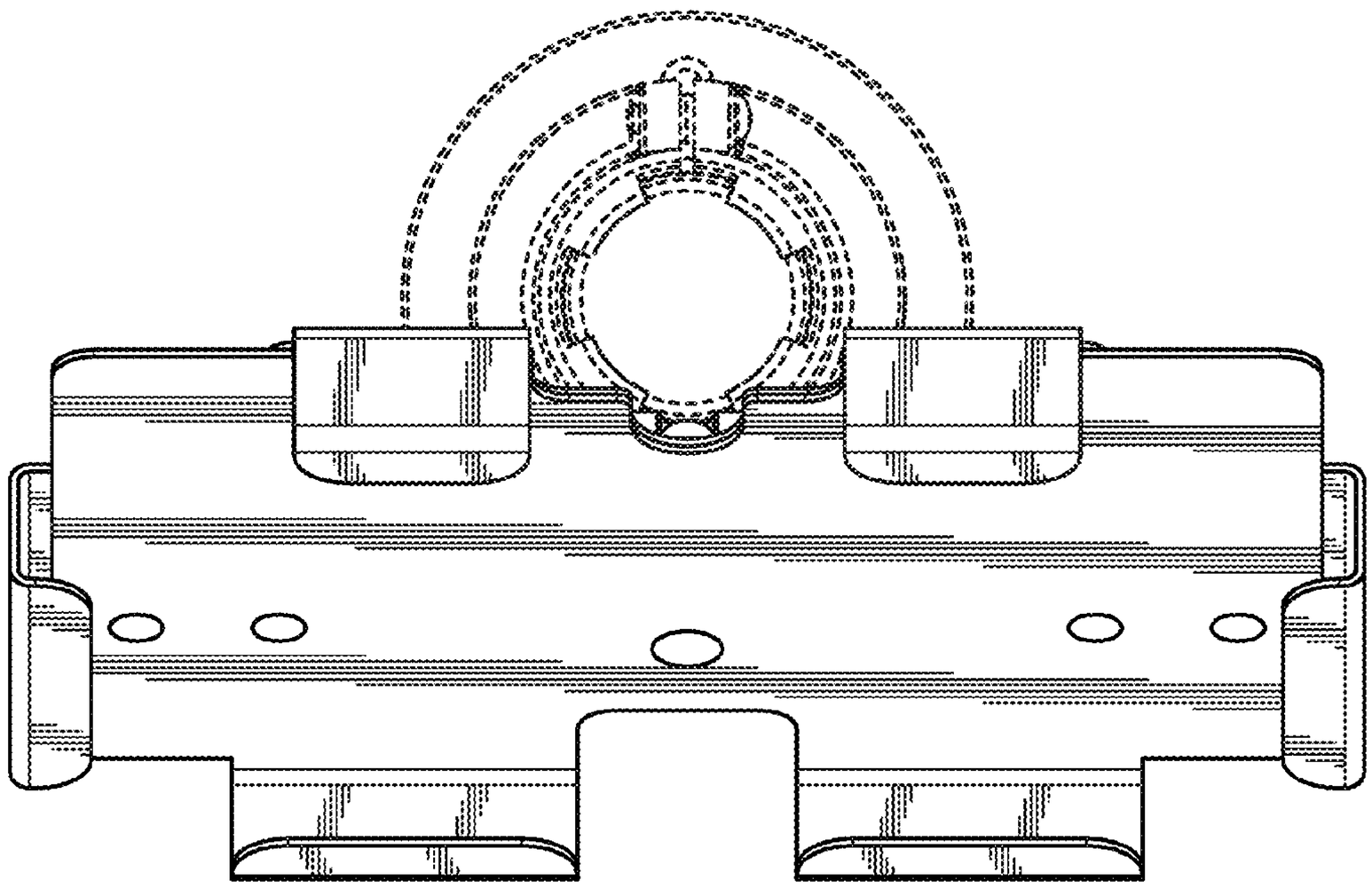

Figure 5

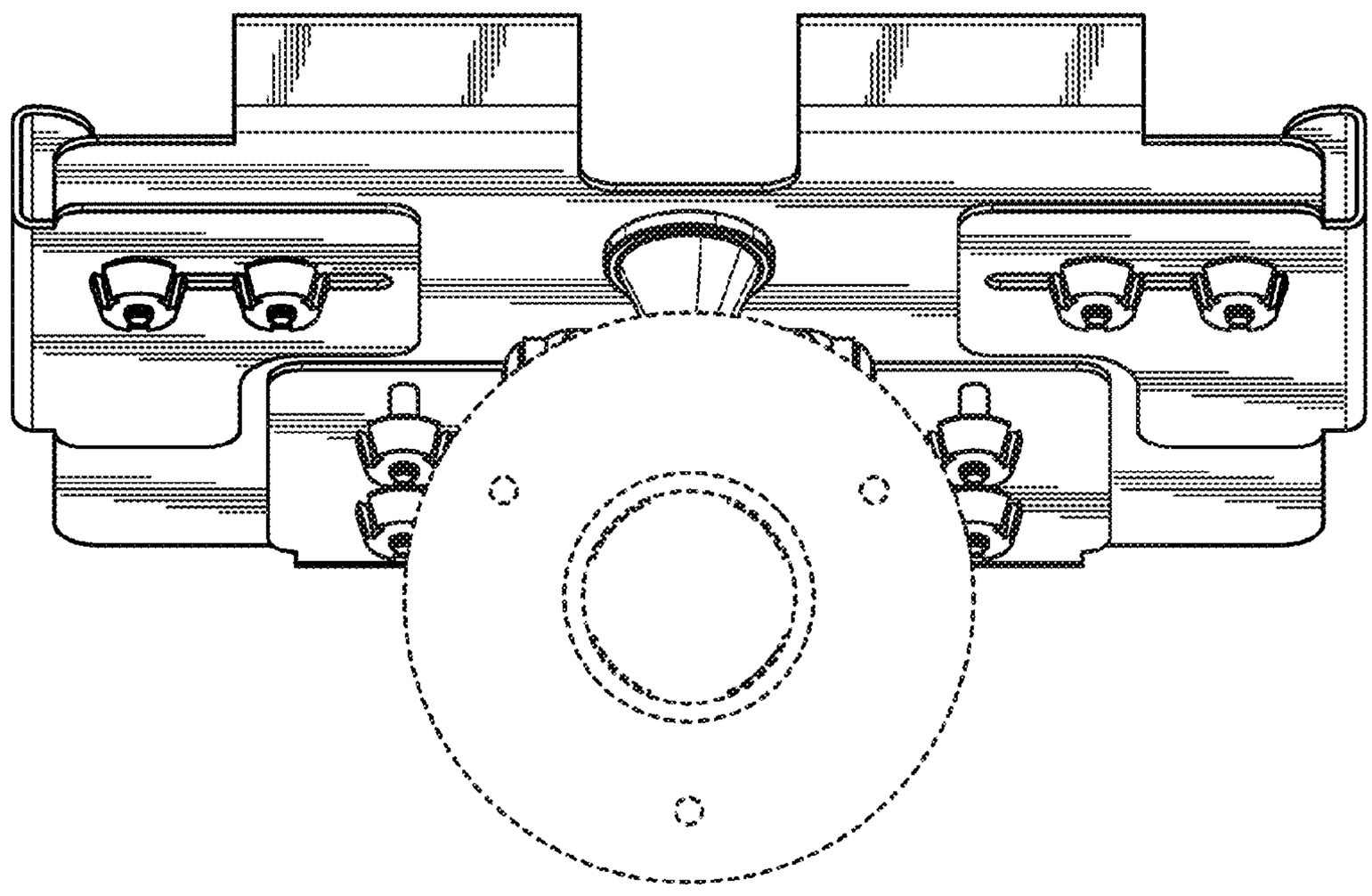

Figure 6

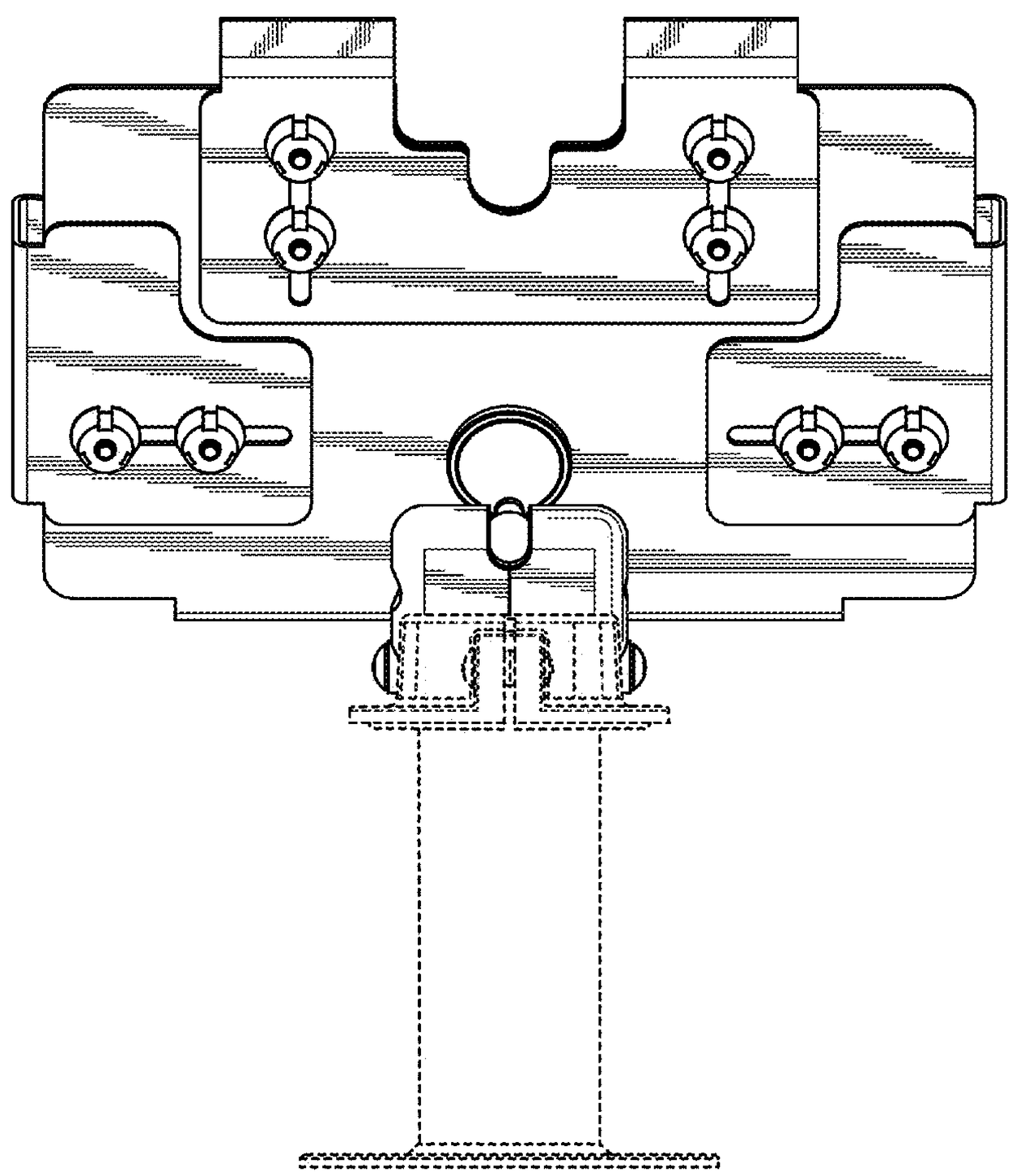

Figure 7

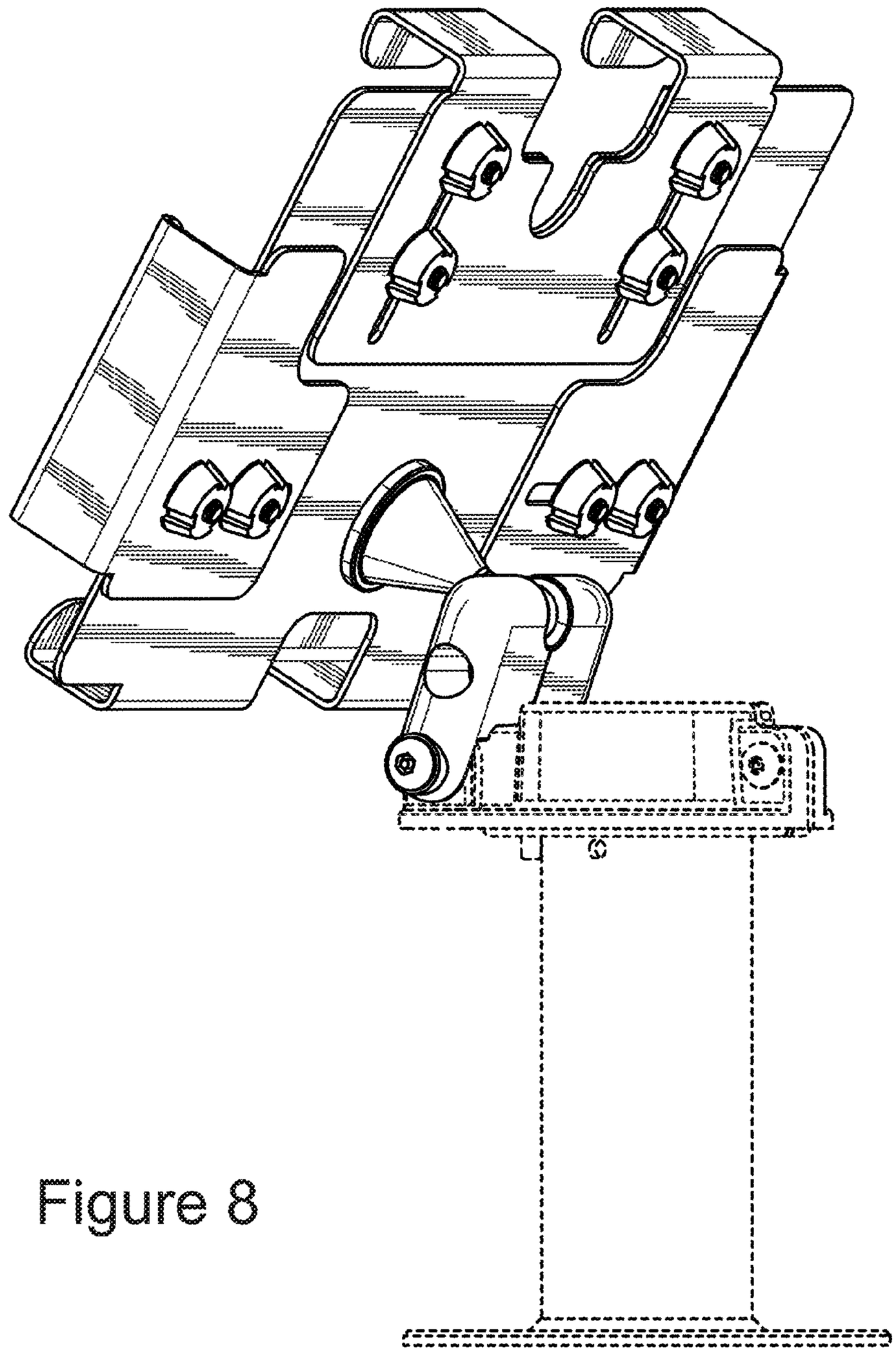

Figure 8

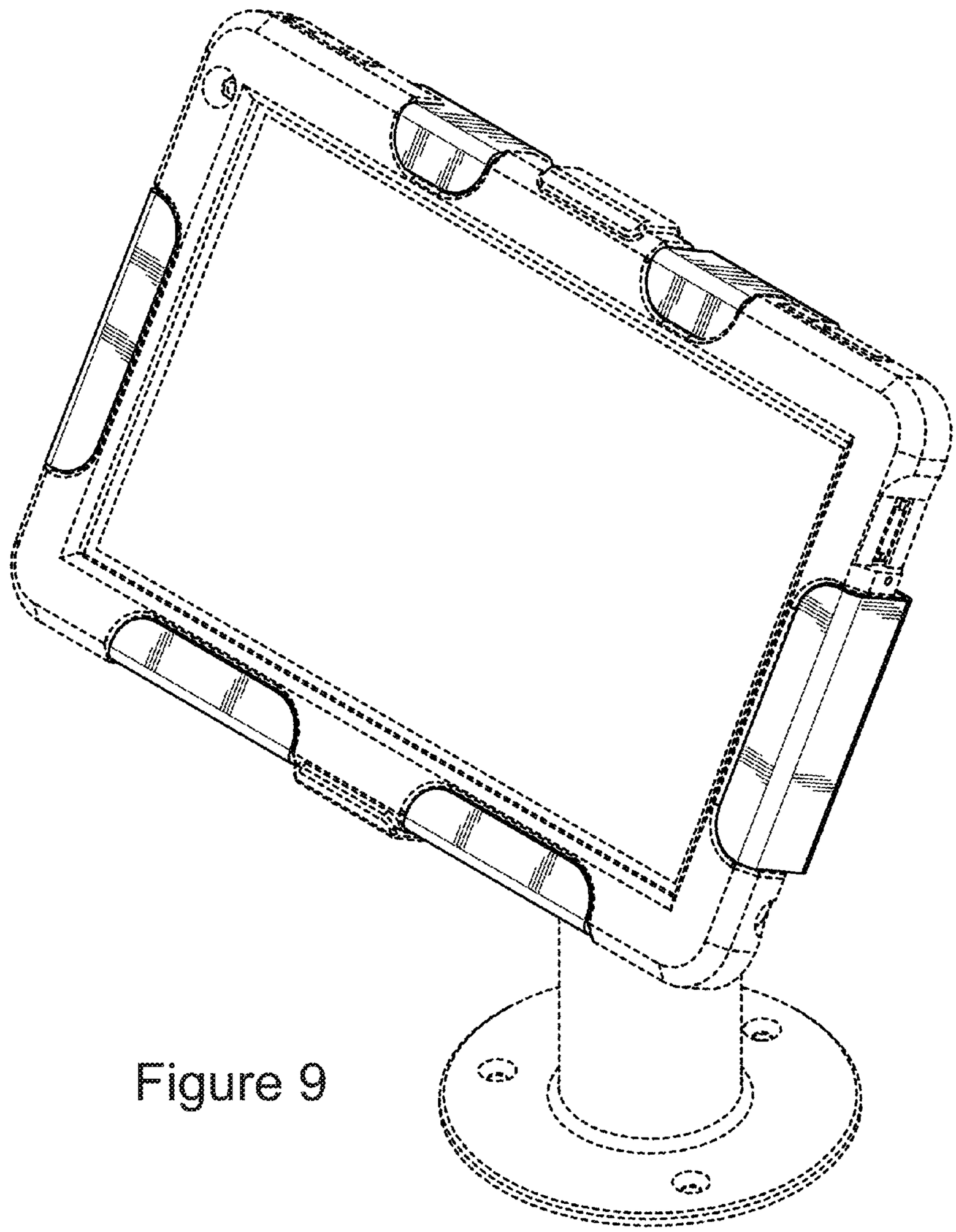

Figure 9

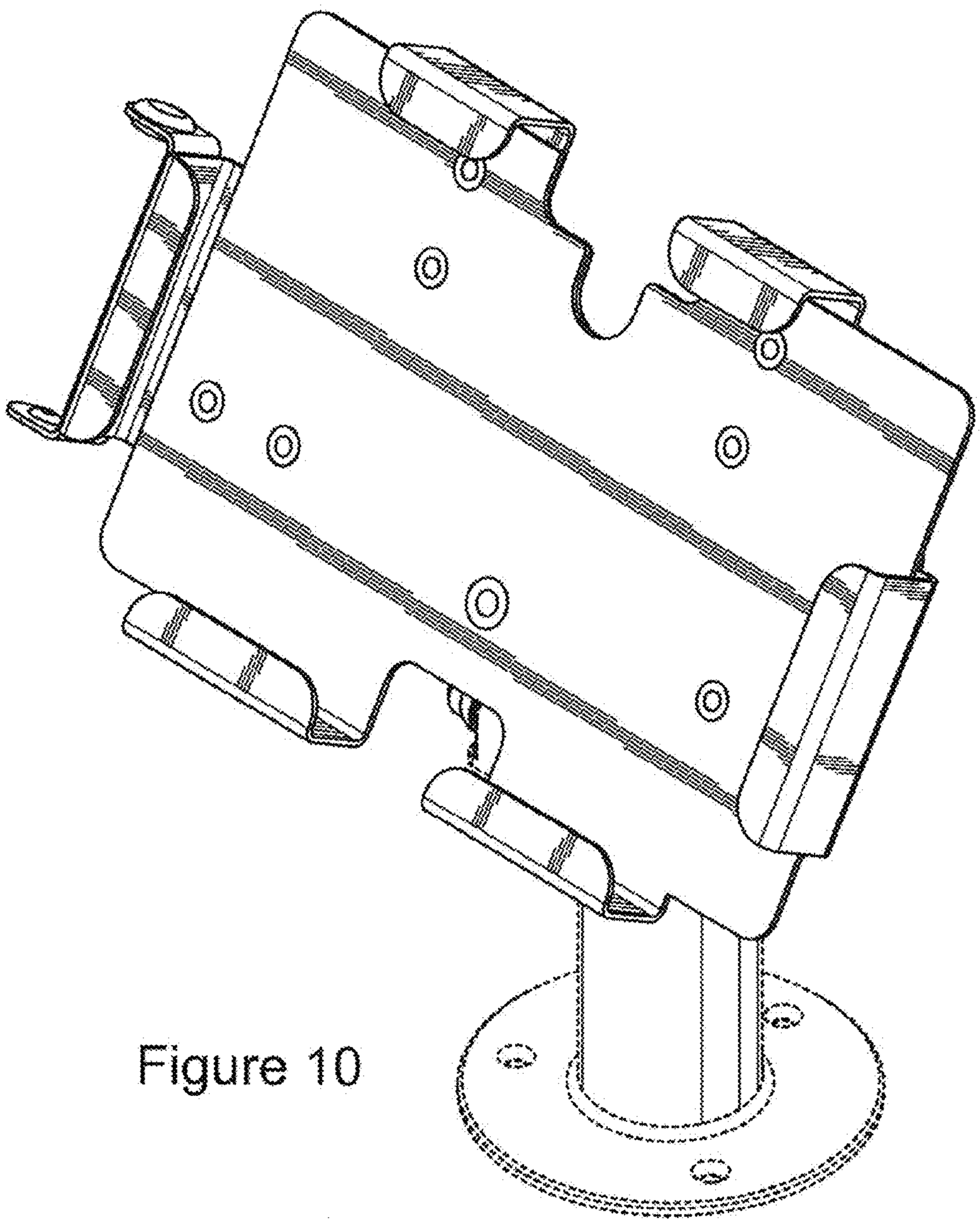

Figure 10

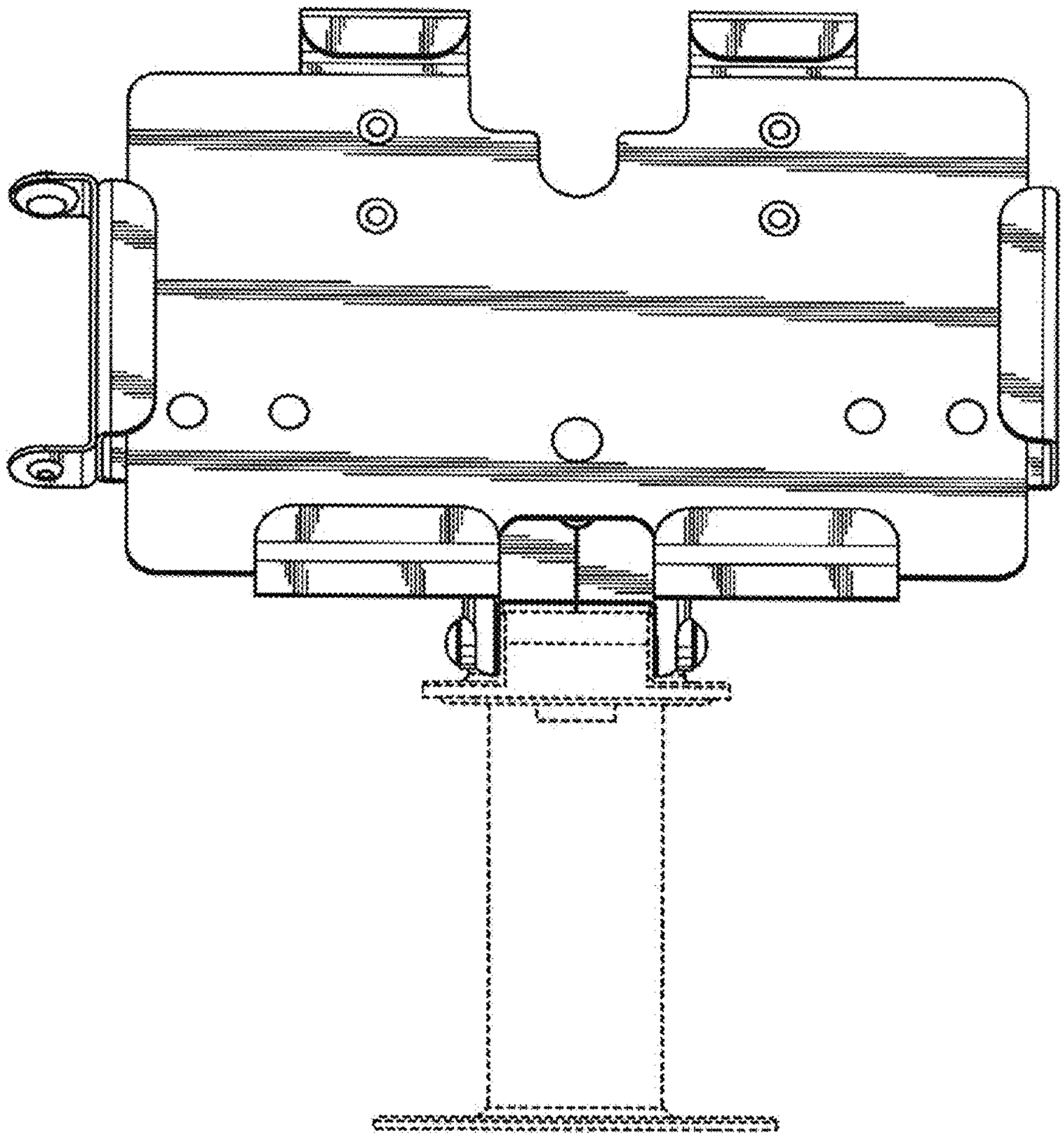

Figure 11

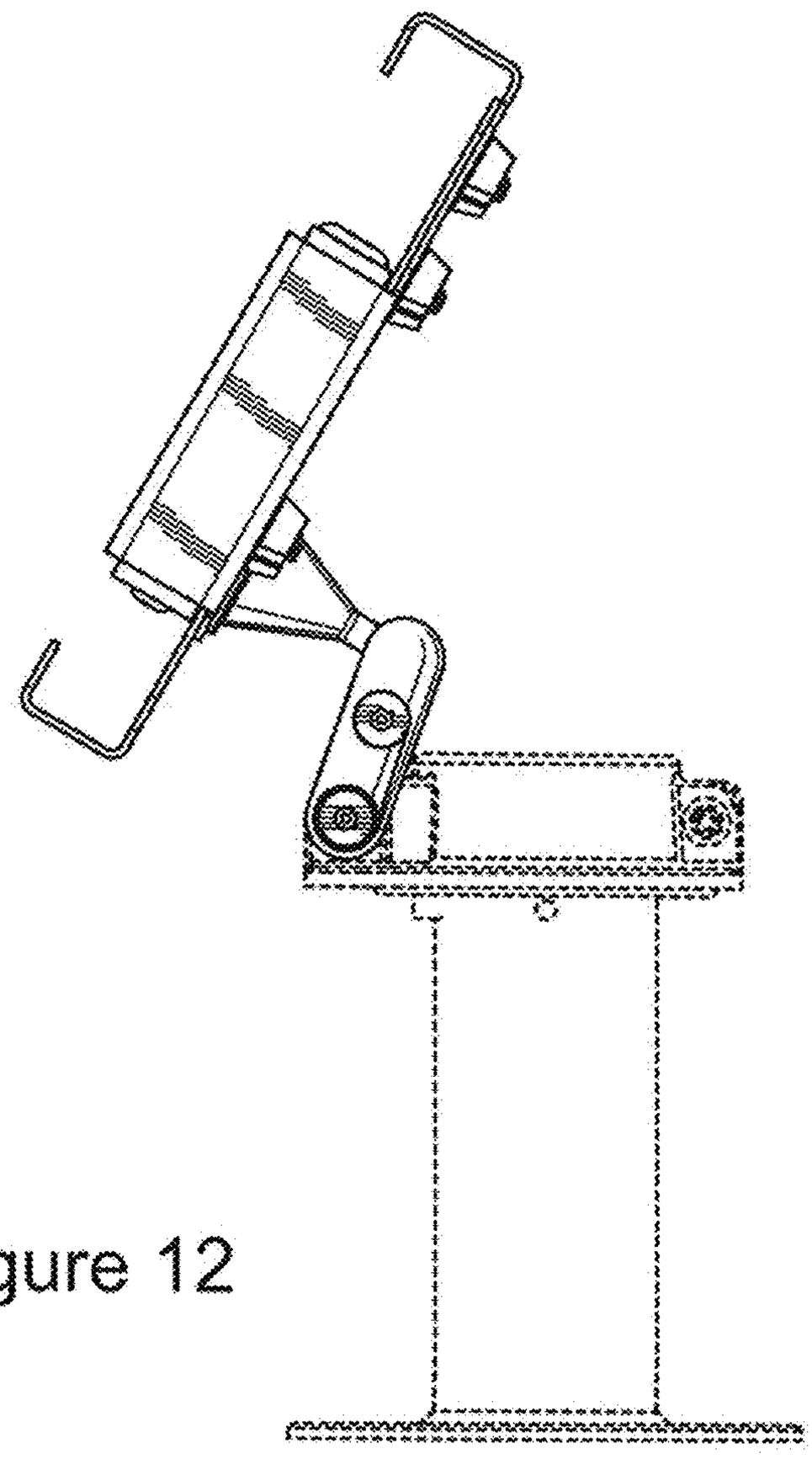

Figure 12

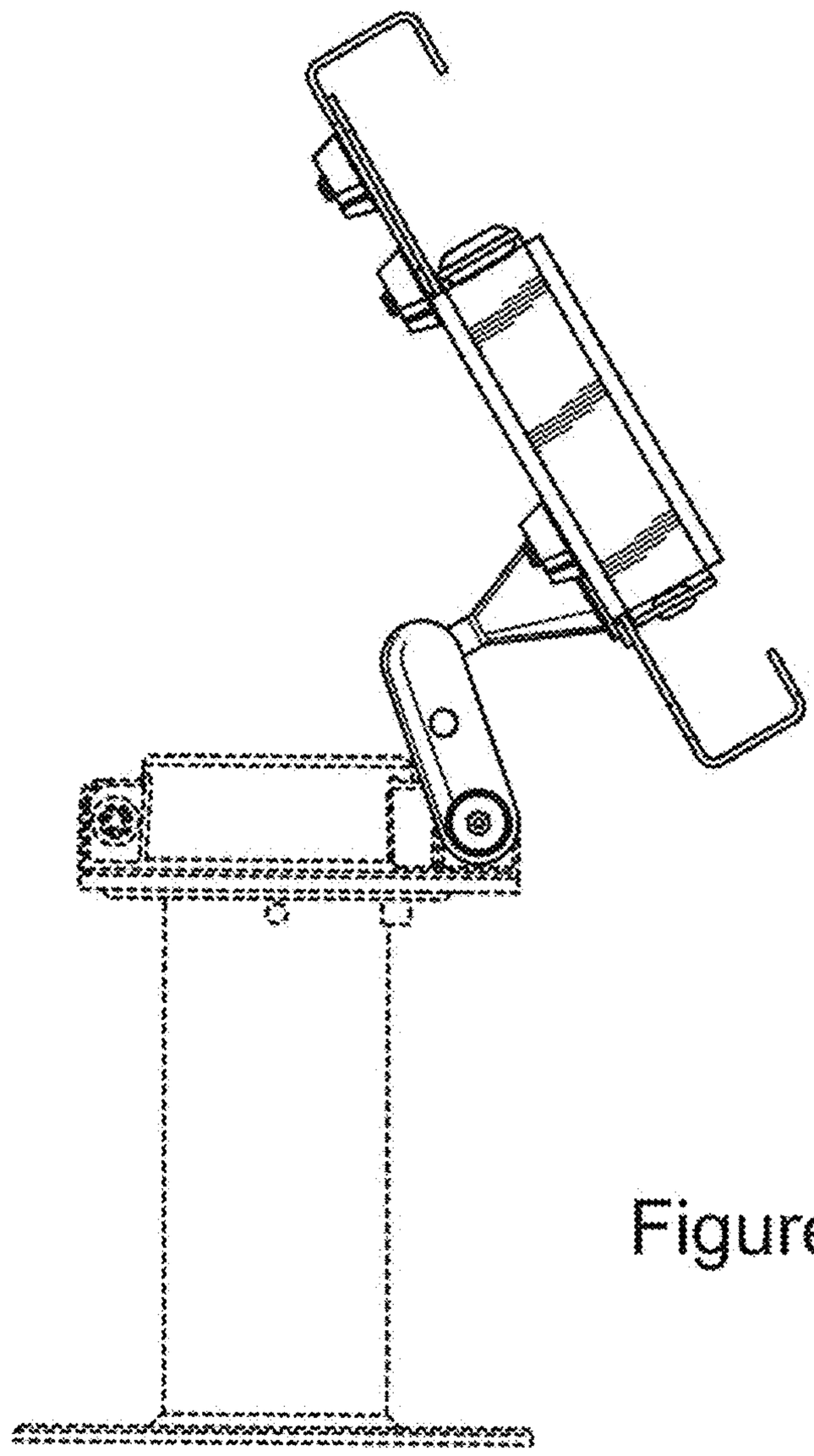

Figure 13

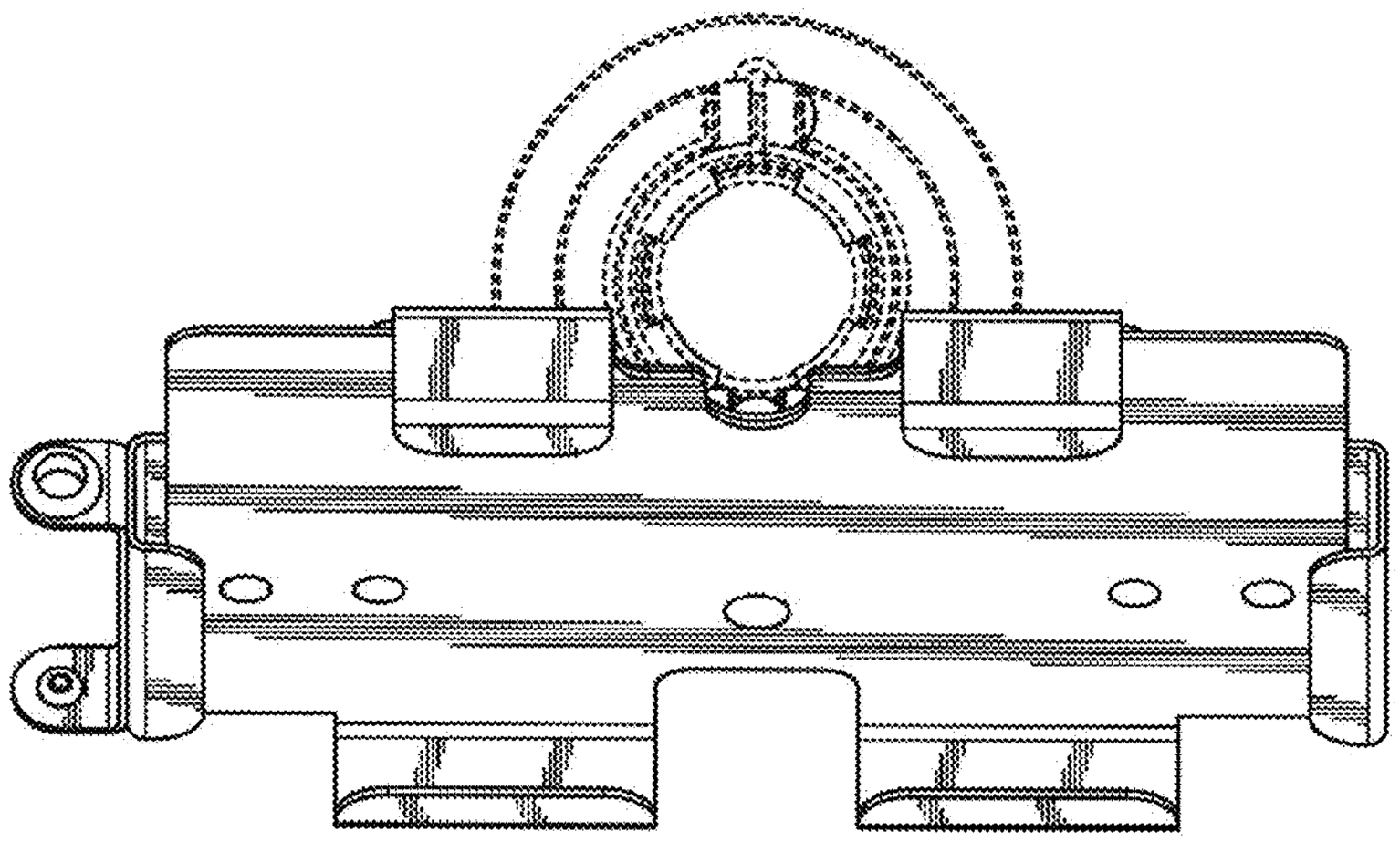

Figure 14

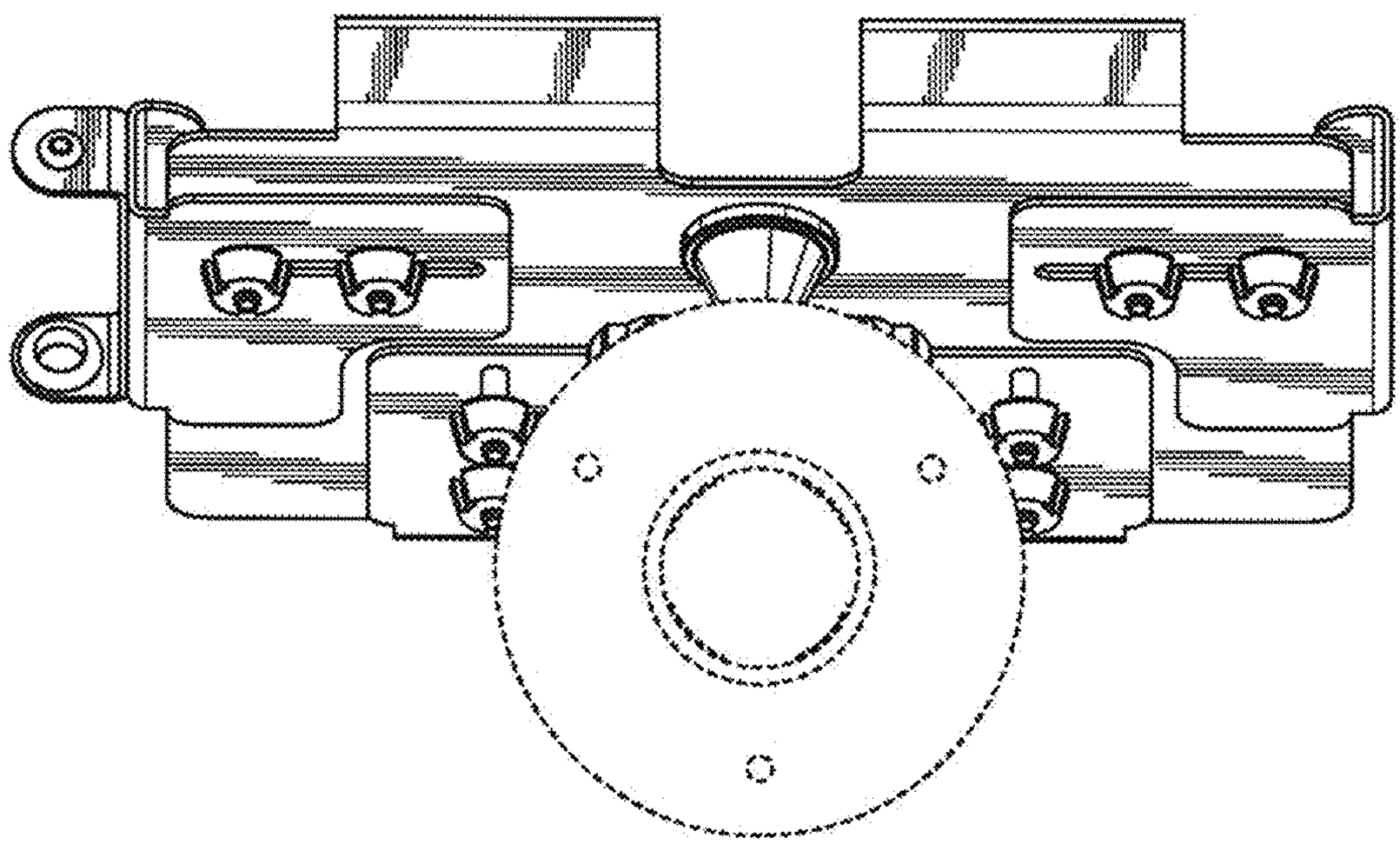

Figure 15

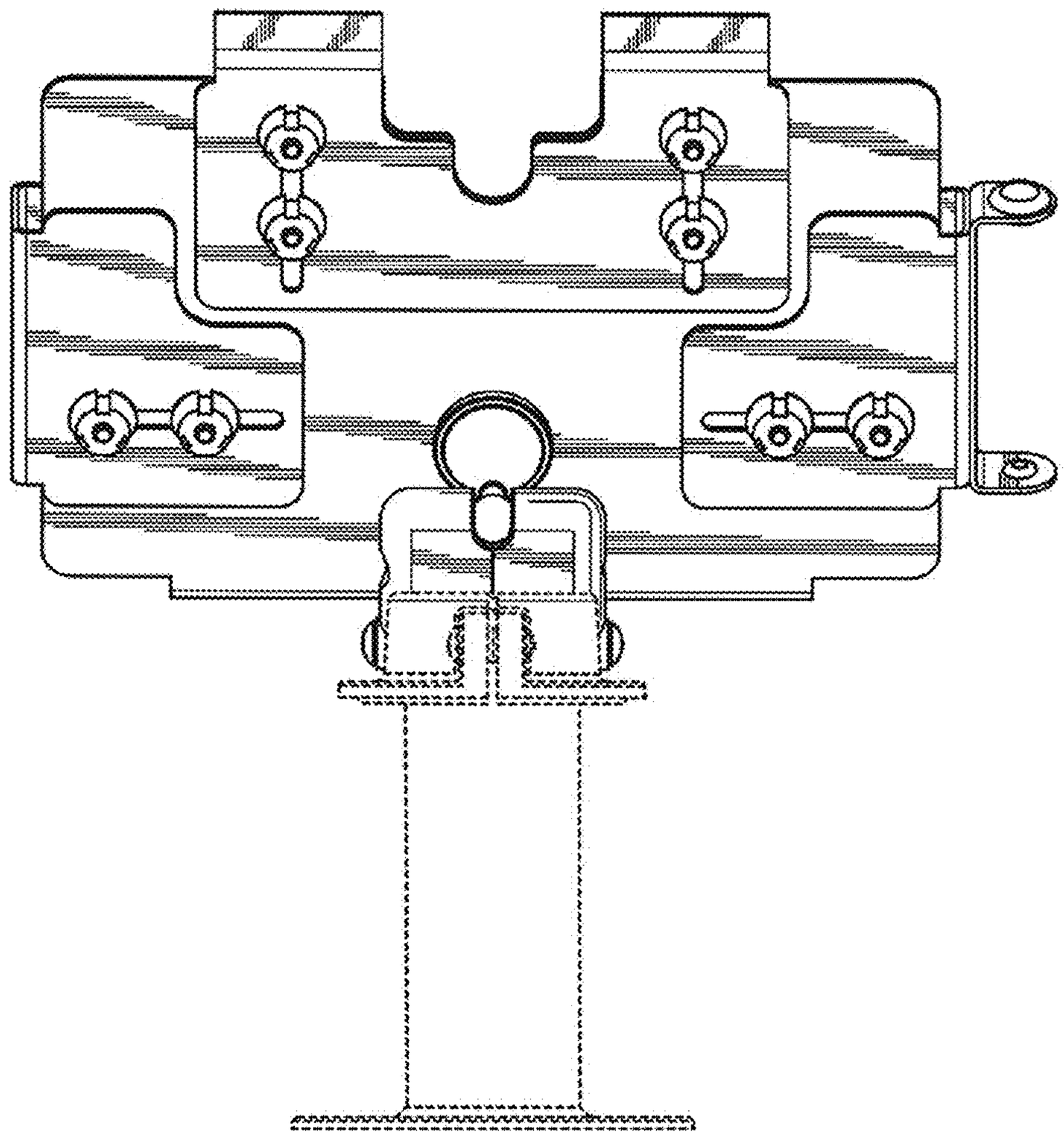

Figure 16

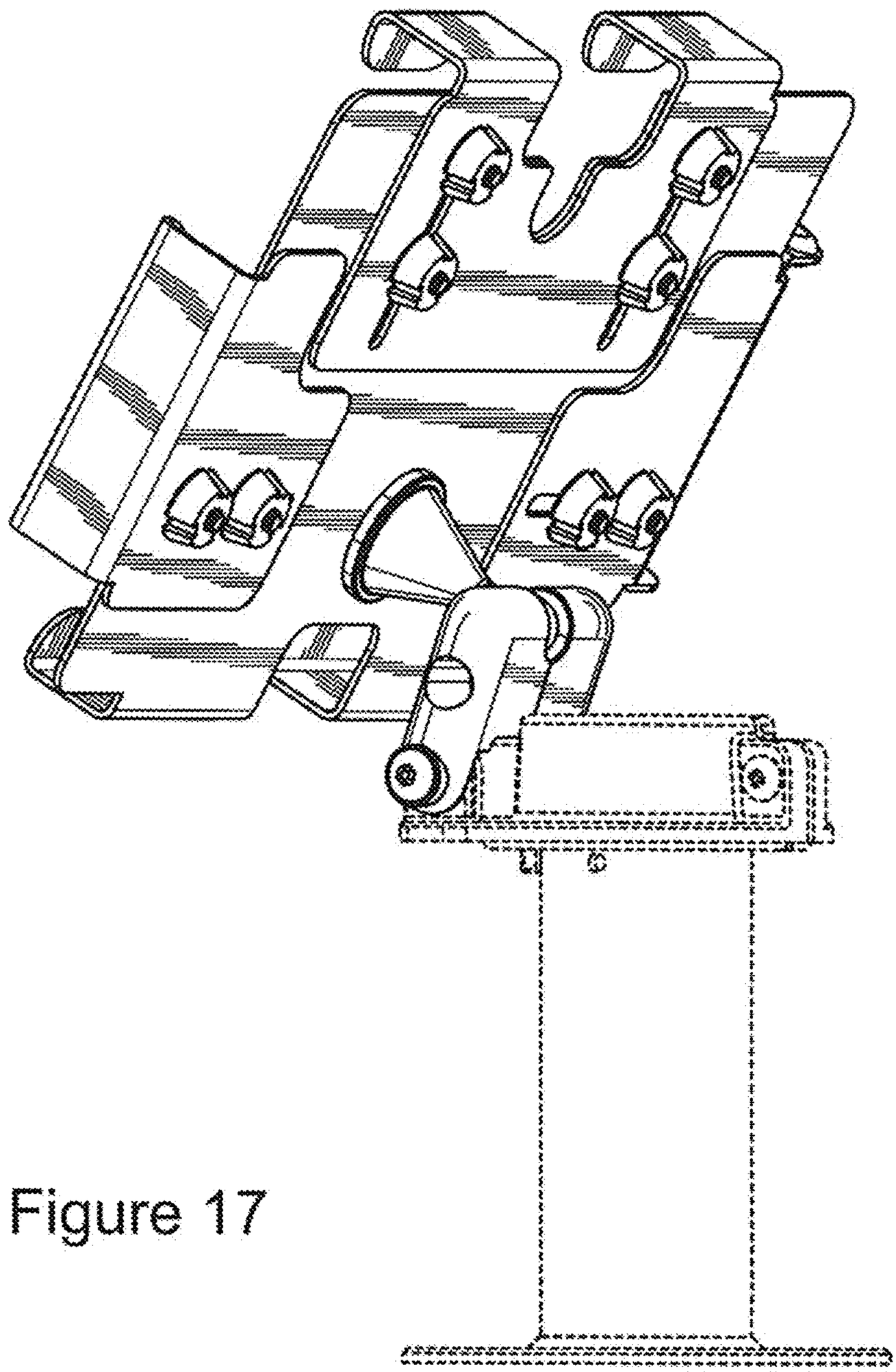

Figure 17