US00D697514S

(12) United States Design Patent

Davis et al.

(10) Patent No.: US D697,514 S
(45) Date of Patent: ** Jan. 14, 2014

(54) **MOUNT FOR AN ELECTRONIC DEVICE**

(75) Inventors: **Chad E. Davis**, Chicago, IL (US); **Daniel T. Berg**, Antioch, IL (US); **Ajit C. Cotha**, Atlanta, GA (US); **Thomas E. Gitzinger**, Libertyville, IL (US); **Dickon Isaacs**, Chicago, IL (US); **John McConnell**, St. Joseph, MI (US)

(73) Assignee: **Motorola Mobility LLC**, Libertyville, IL (US)

(**) Term: **14 Years**

(21) Appl. No.: **29/417,914**

(22) Filed: **Apr. 10, 2012**

(51) **LOC (10) Cl.** **08-07**

(52) **U.S. Cl.**
USPC **D14/447**

(58) **Field of Classification Search**
USPC D14/432, 433, 434, 439, 440, 451, 452, D14/239, 217, 224.1, 251, 252, 253, 457, D14/458, 459, 460, 461; D6/406.1, 406.2, D6/406.3, 406.4, 406.5, 406.6; 361/679.06, 679.21, 679.22, 679.24, 361/679.26, 679.27, 679.28, 679.3, 679.55, 361/679.56, 709; 248/917–924, 133, 136, 248/139, 150, 176.1, 188.6
See application file for complete search history.

(56) **References Cited**

U.S. PATENT DOCUMENTS

D419,897 S 2/2000 Storck
D437,709 S * 2/2001 Edstrom D6/406.4

(Continued)

Primary Examiner — Angela J Lee
(74) *Attorney, Agent, or Firm* — Gary J. Cunningham

(57) **CLAIM**

The ornamental design for a mount for an electronic device, as shown and described.

DESCRIPTION

FIG. **1** is a front perspective view of a first embodiment of an ornamental design for a mount for an electronic device;
FIG. **2** is a rear perspective view of the first embodiment thereof;
FIG. **3** is a top view of the first embodiment thereof;
FIG. **4** is a bottom view of the first embodiment thereof;
FIG. **5** is a first side view of the first embodiment thereof;
FIG. **6** is a second side view of the first embodiment thereof;
FIG. **7** is a front view of the first embodiment thereof; and
FIG. **8** is a rear view of the first embodiment thereof.
FIG. **9** is a front perspective view of a second embodiment of an ornamental design for a mount for an electronic device;
FIG. **10** is a rear perspective view of the second embodiment thereof;
FIG. **11** is a top view of the second embodiment thereof;
FIG. **12** is a bottom view of the second embodiment thereof;
FIG. **13** is a first side view of the second embodiment thereof;
FIG. **14** is a second side view of the second embodiment thereof;
FIG. **15** is a front view of the second embodiment thereof; and,
FIG. **16** is a rear view of the second embodiment thereof.
The broken lines shown in FIGS. **1-8**, that are immediately adjacent to the shaded areas, and define unshaded regions, represent the bounds of the first embodiments, while all other broken lines are directed to environment and are for illustrative purposes only; the broken lines form no part of the first embodiments.

1 Claim, 12 Drawing Sheets

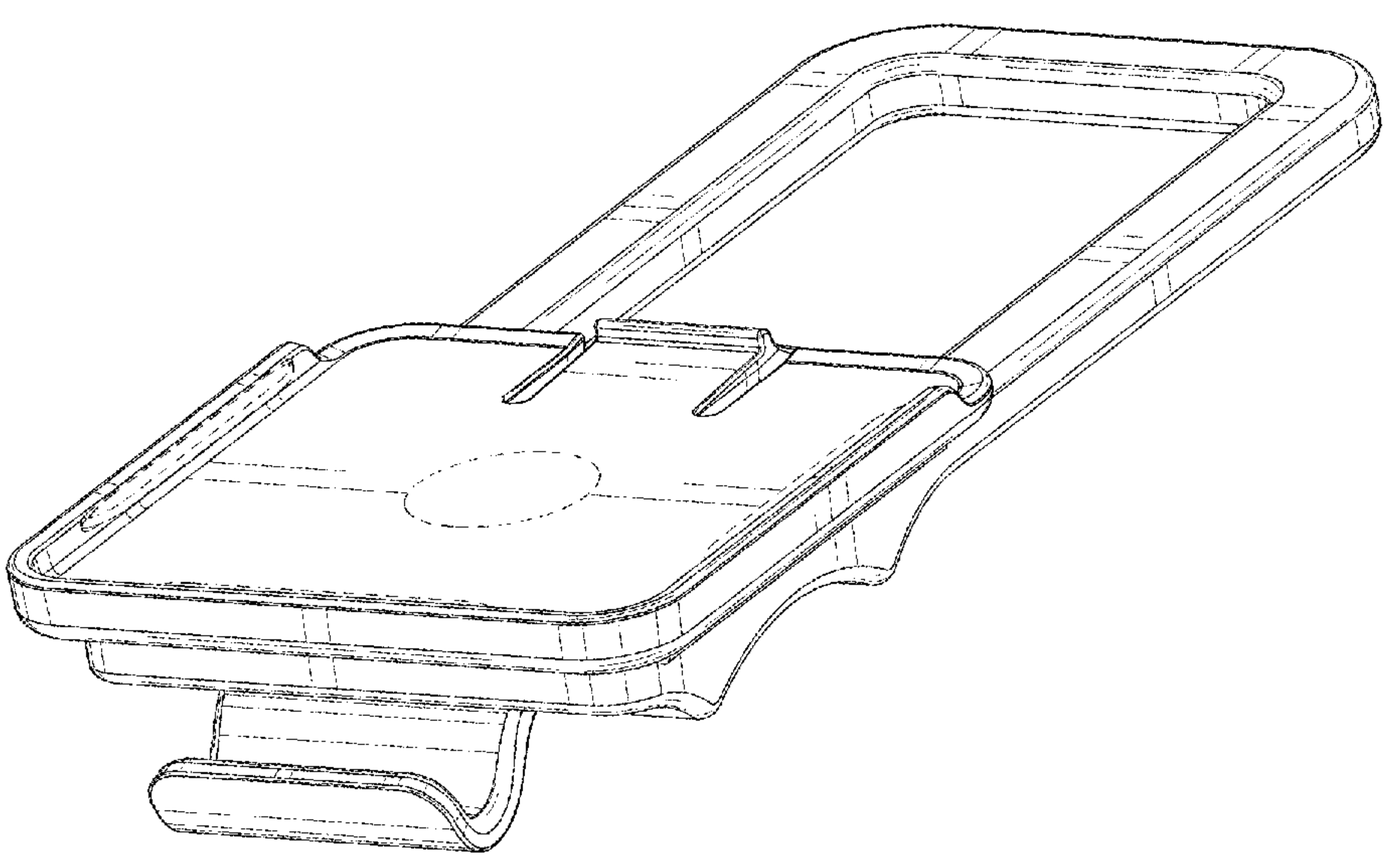

(56) **References Cited**

U.S. PATENT DOCUMENTS

D508,055	S	*	8/2005	Lo	D14/451
D602,913	S	*	10/2009	Han et al.	D14/217
D645,462	S	*	9/2011	Choi	D14/253
D645,865	S	*	9/2011	Diehl	D14/432
D650,372	S	*	12/2011	Molter	D14/239
D667,012	S	*	9/2012	Chen et al.	D14/447
D670,295	S	*	11/2012	Prescott et al.	D14/447
D676,449	S	*	2/2013	Probst et al.	D14/440
D677,261	S	*	3/2013	Hsu et al.	D14/447
D677,668	S	*	3/2013	Phillips et al.	D14/440
D679,700	S	*	4/2013	Werth	D14/253
2013/0026314	A1	*	1/2013	Hu et al.	248/157

* cited by examiner

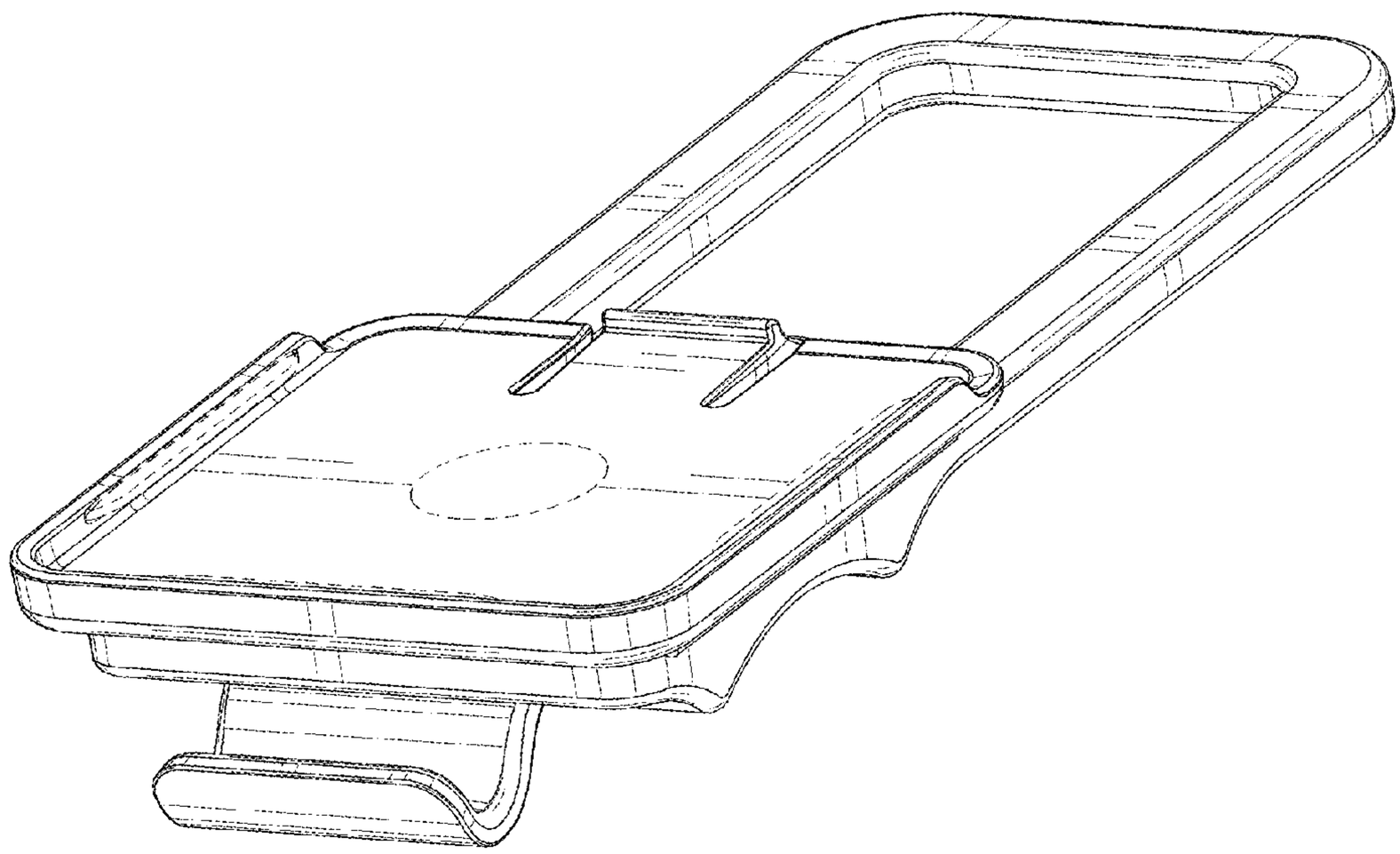

FIG. 1

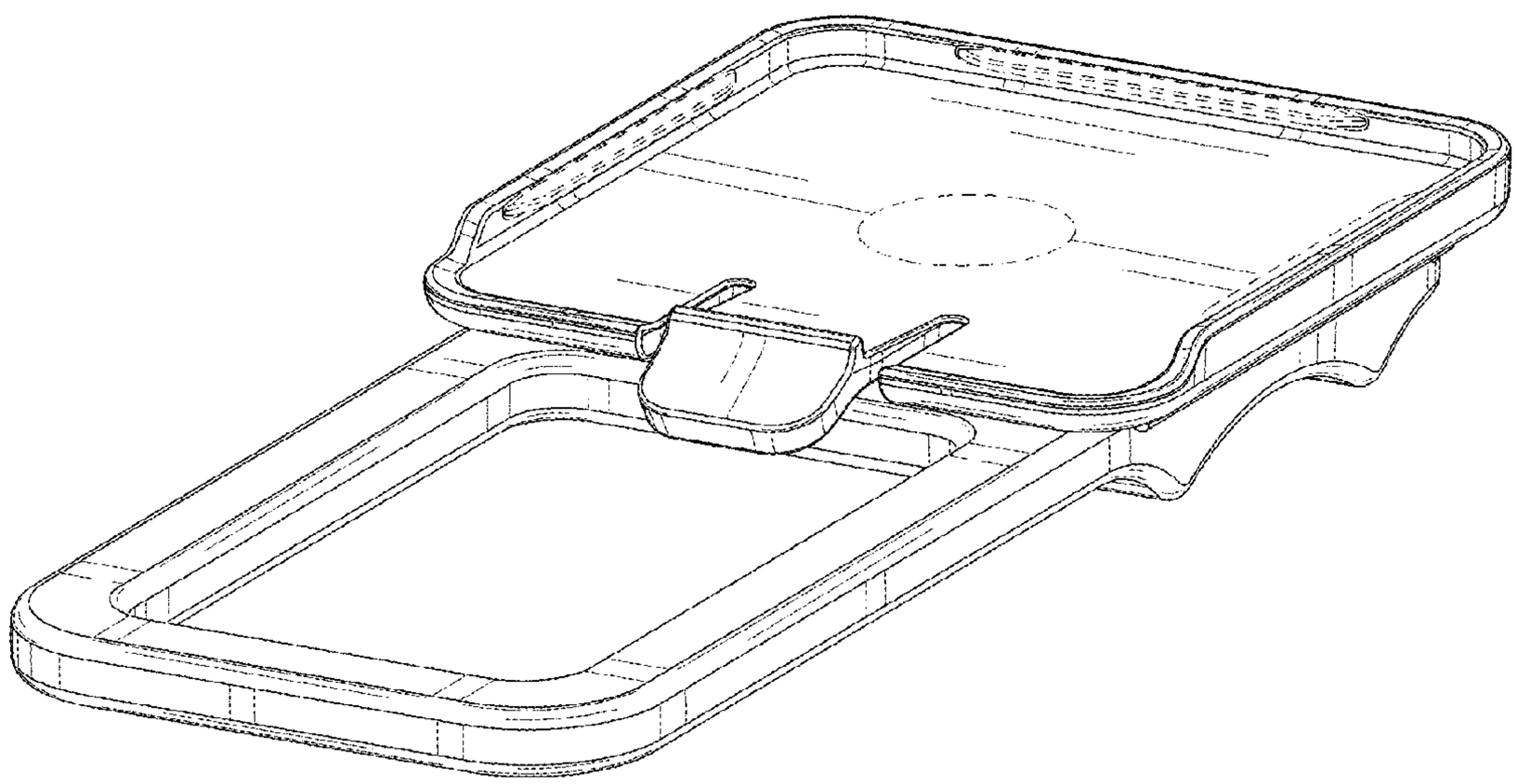

FIG. 2

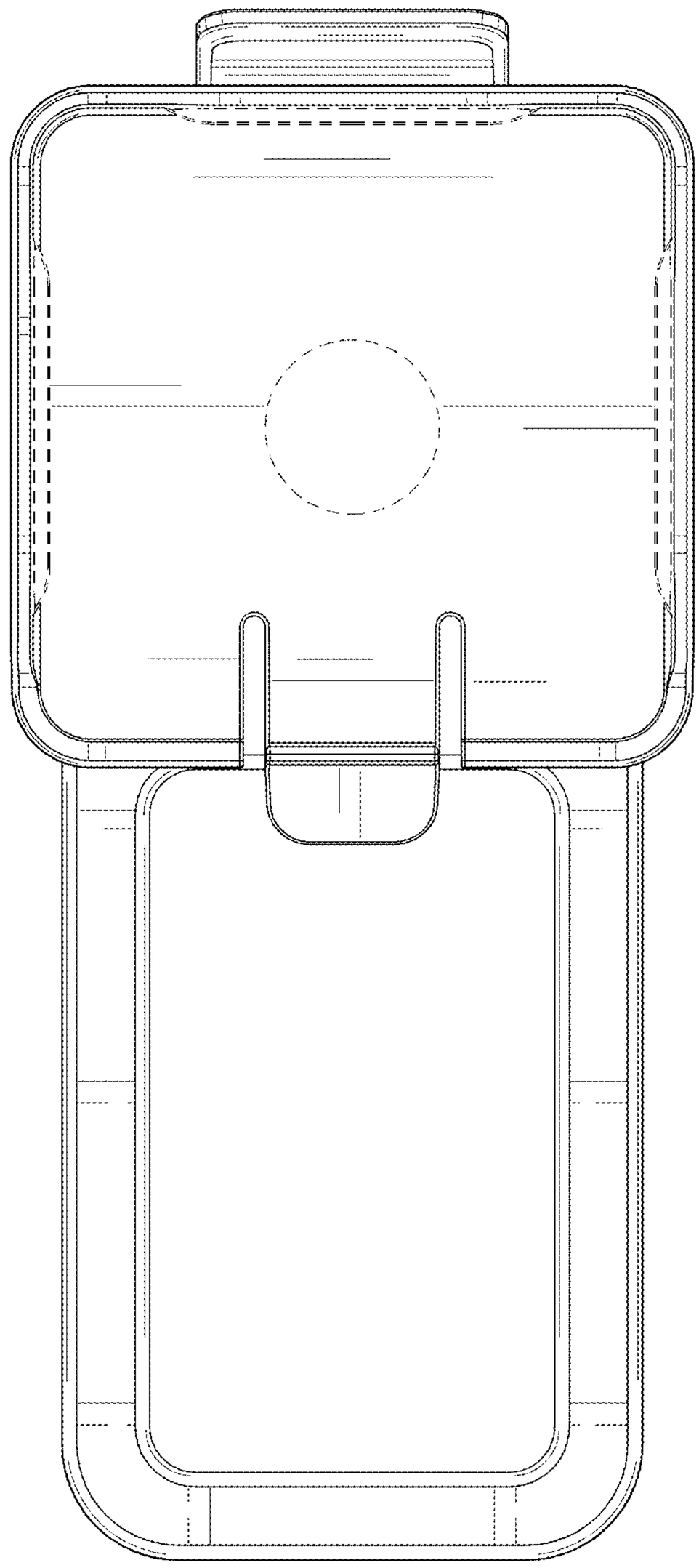

FIG. 3

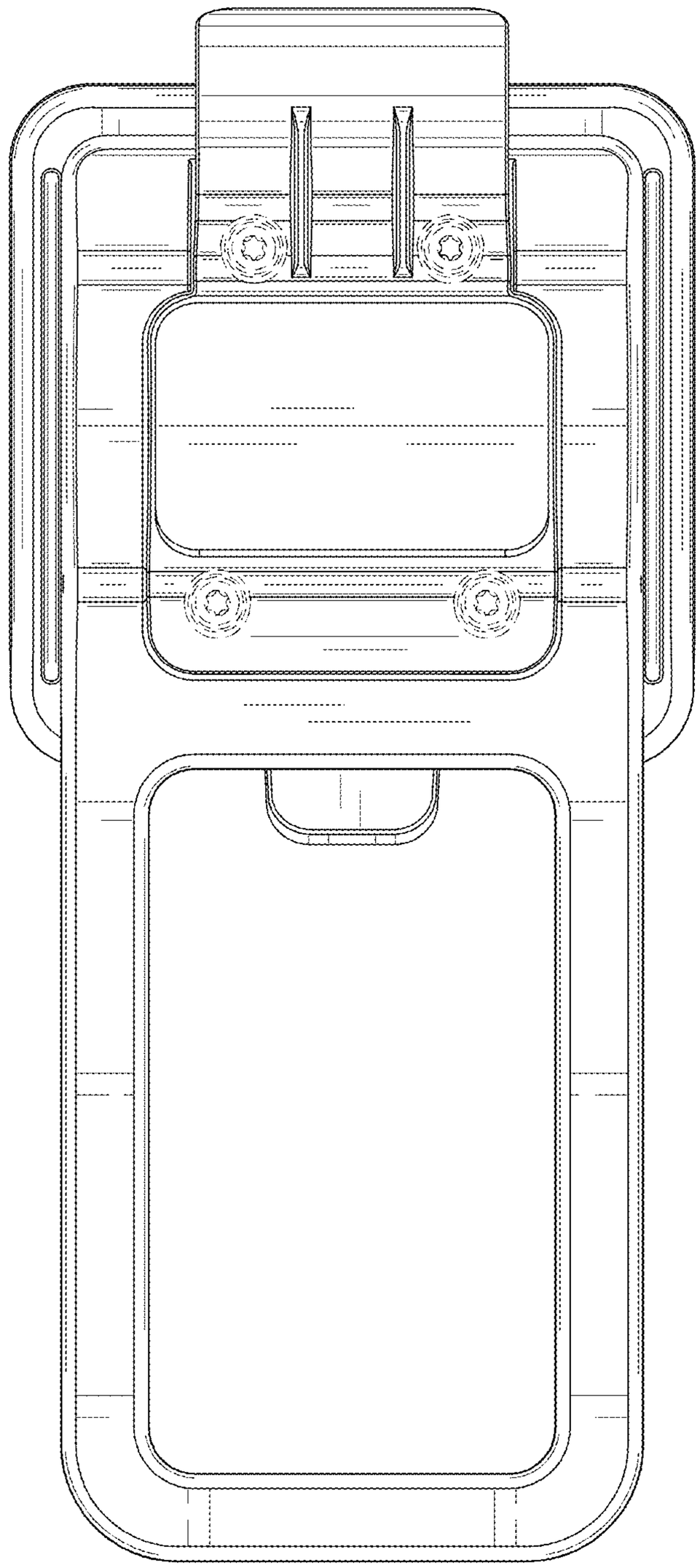

FIG. 4

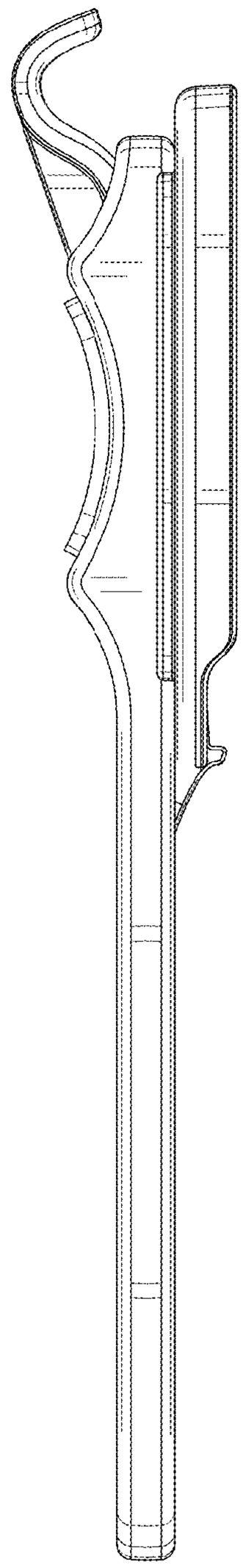

FIG. 5

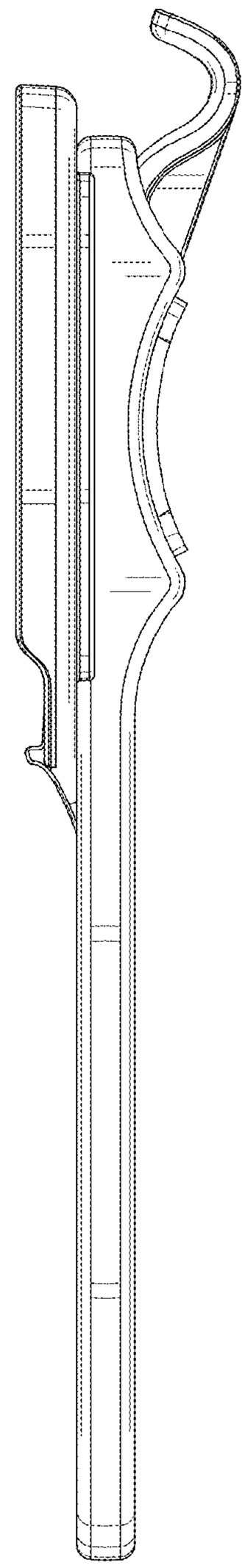

FIG. 6

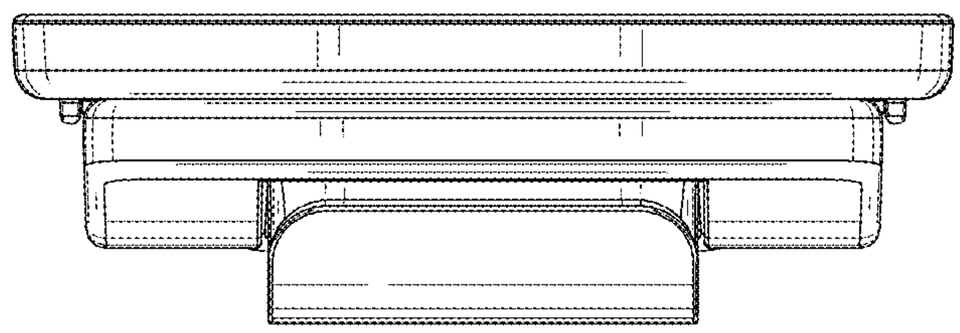

FIG. 7

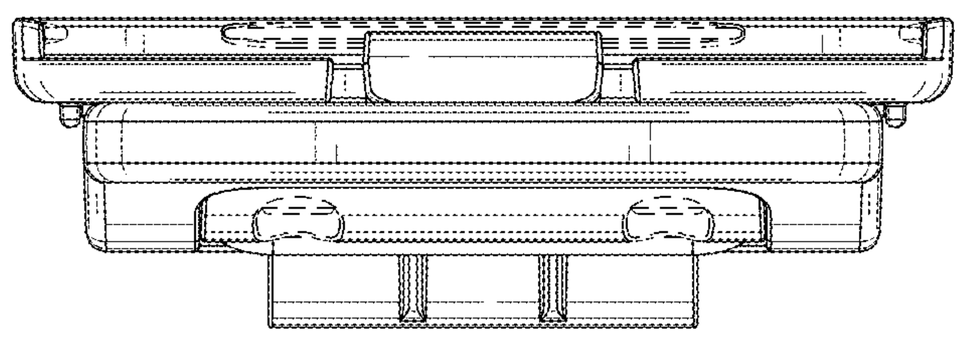

FIG. 8

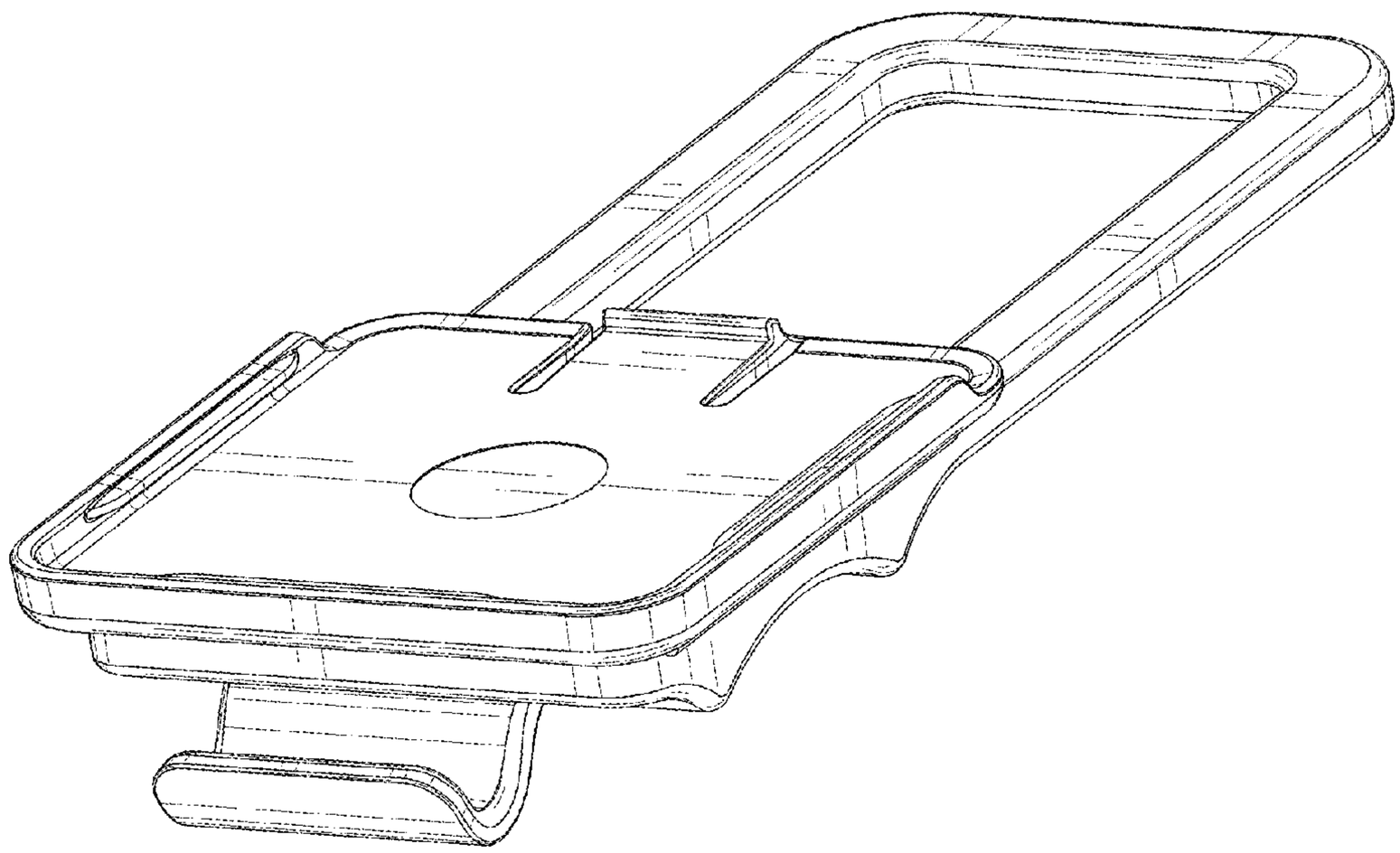

FIG. 9

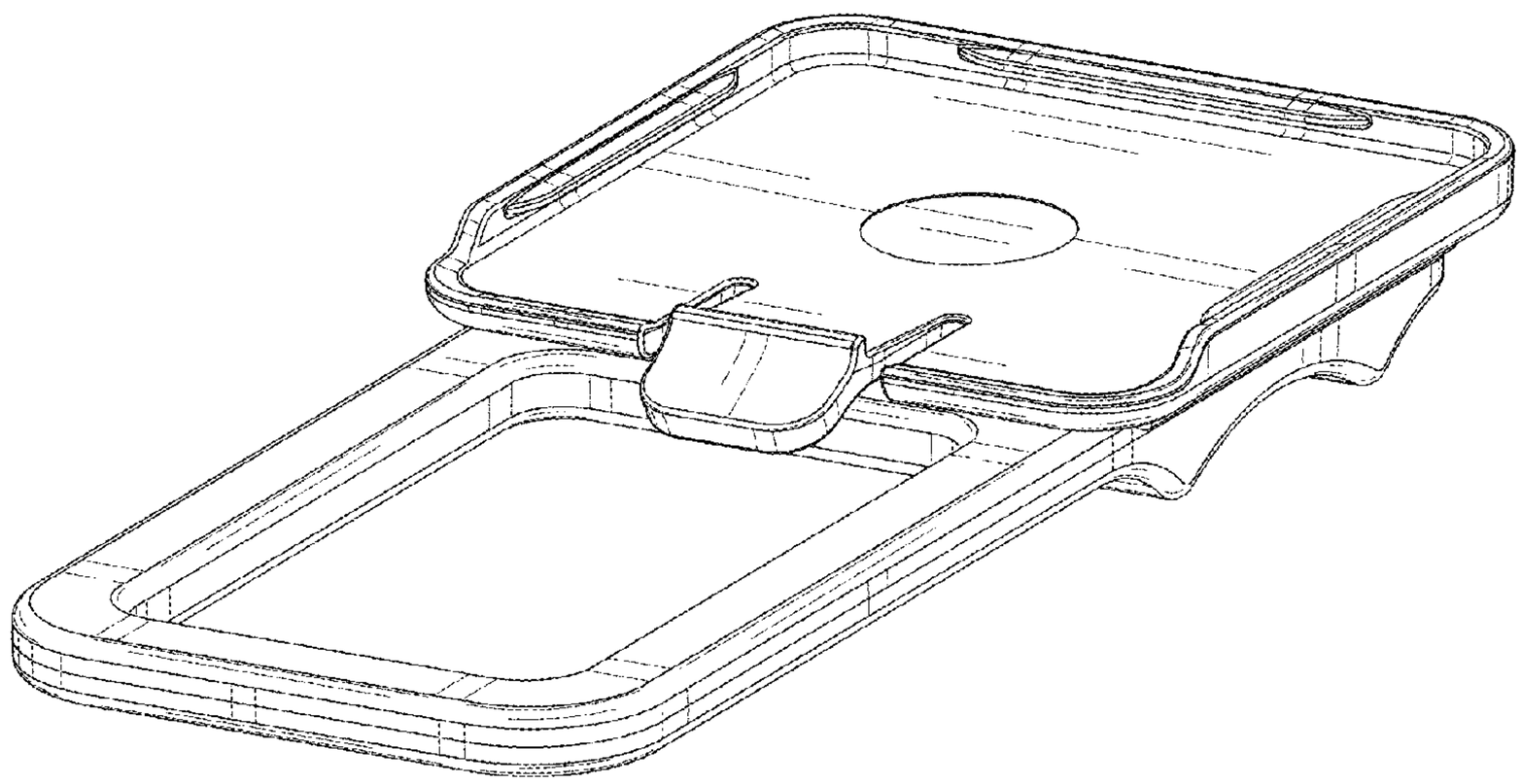

FIG. 10

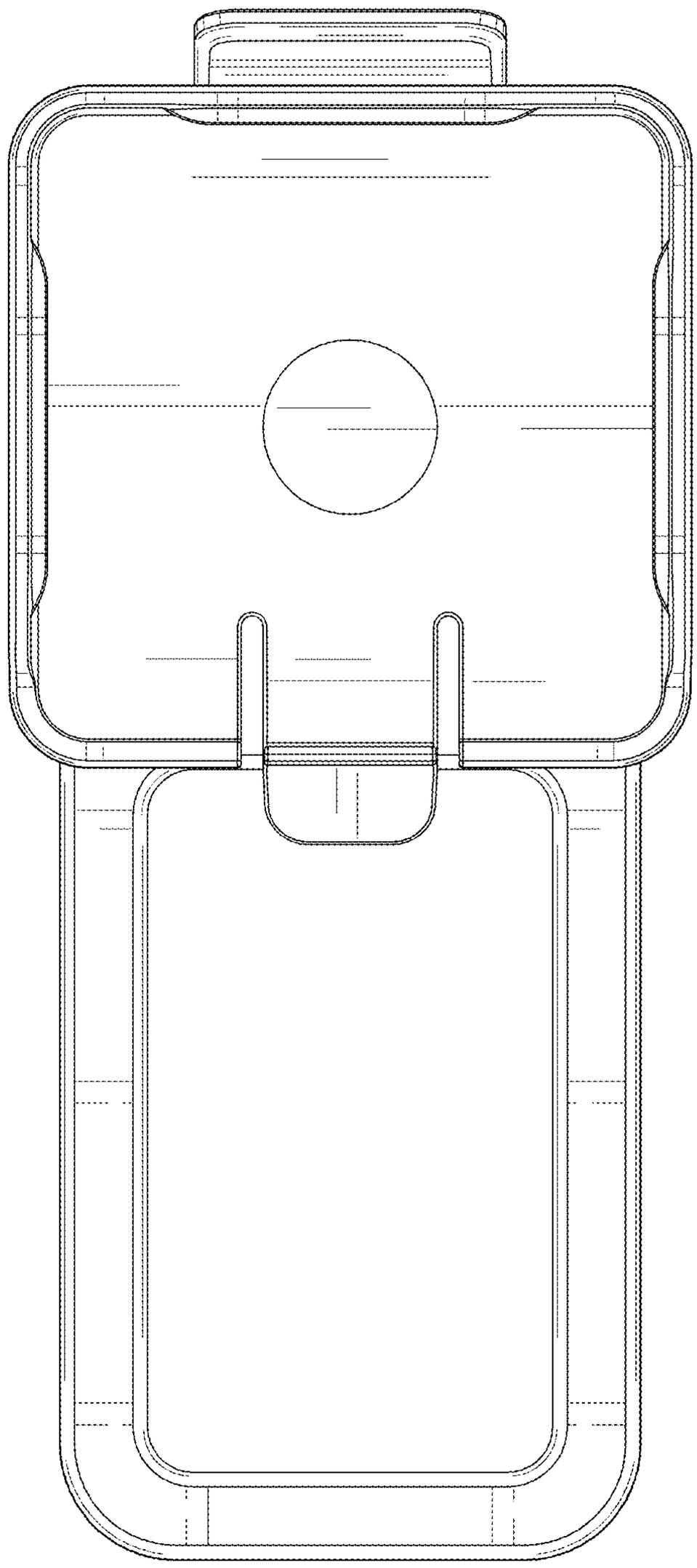

FIG. 11

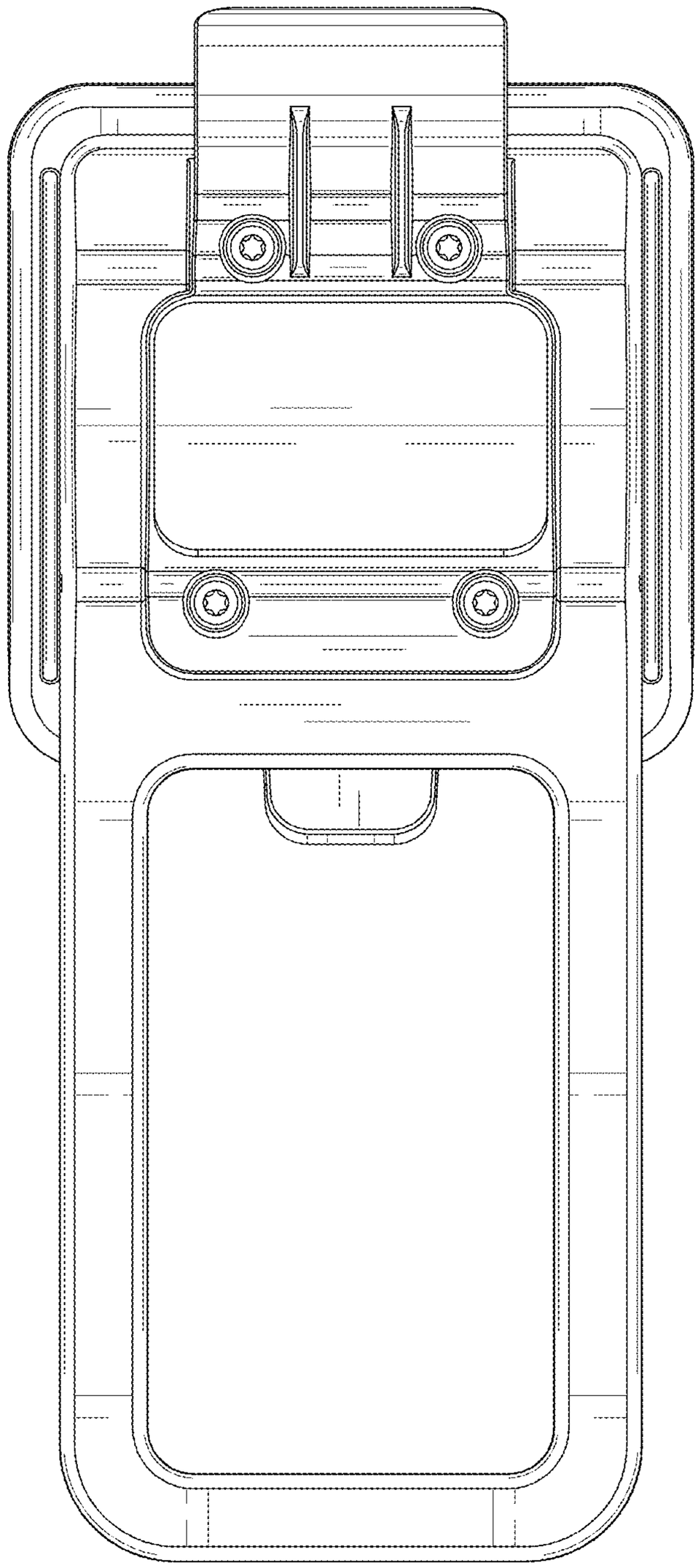

FIG. 12

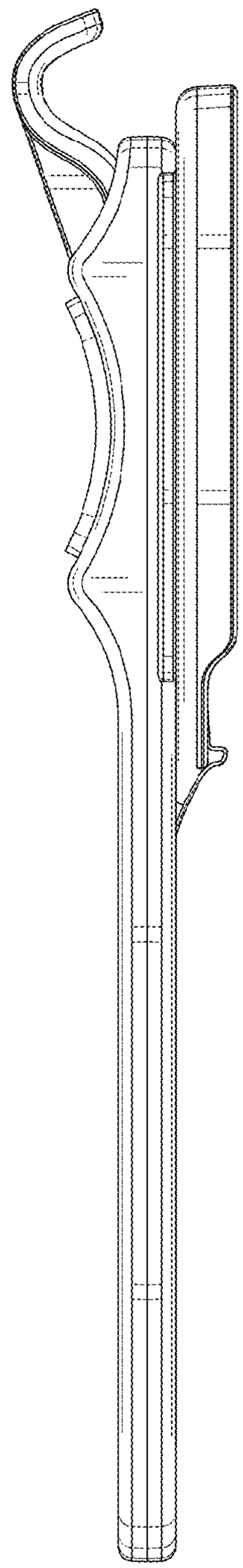

FIG. 13

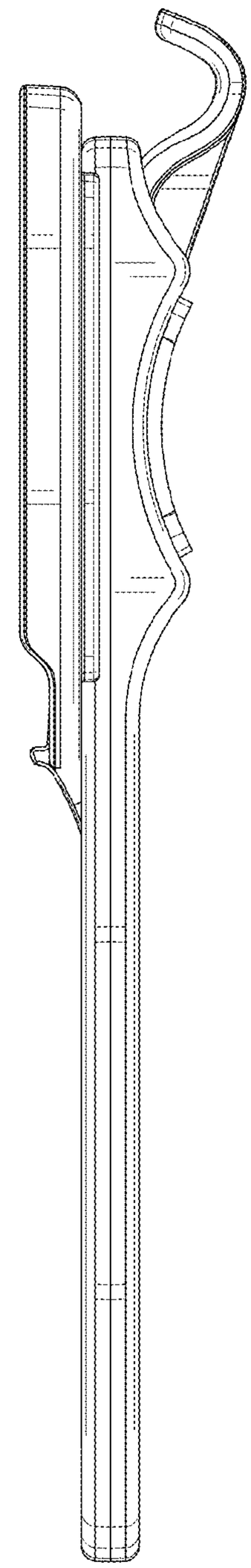

FIG. 14

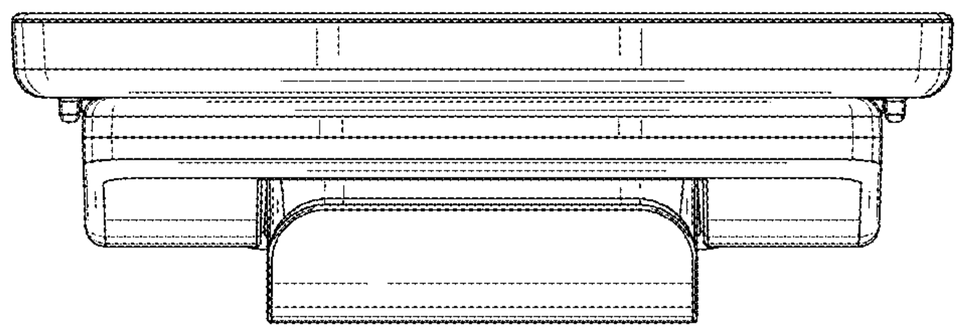

FIG. 15

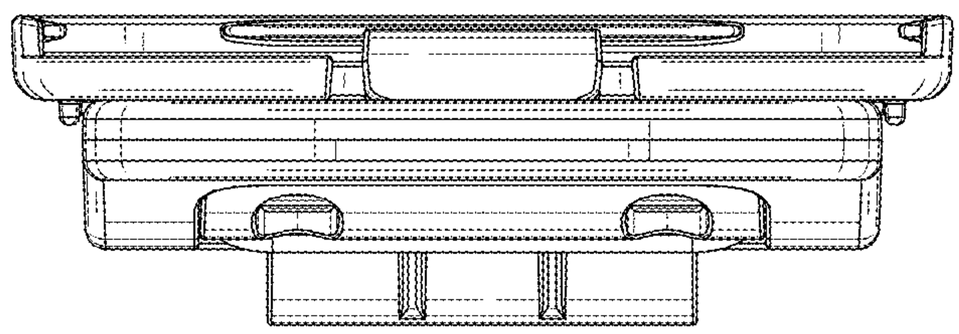

FIG. 16