US00D694209S

(12) United States Design Patent

Cho et al.

(10) Patent No.: US D694,209 S
(45) Date of Patent: ** Nov. 26, 2013

(54) **LIQUID CRYSTAL DISPLAY (LCD) MONITOR**

(71) Applicant: **LG Electronics Inc.**, Seoul (KR)

(72) Inventors: **Sungjoo Cho**, Seoul (KR); **Byungmu Huh**, Seoul (KR); **Banhee Lee**, Seoul (KR)

(73) Assignee: **LG Electronics Inc.**, Seoul (KR)

(**) Term: **14 Years**

(21) Appl. No.: **29/441,905**

(22) Filed: **Jan. 10, 2013**

(30) **Foreign Application Priority Data**

Jul. 11, 2012 (KR) 30-2012-0033795

(51) **LOC (9) Cl.** **14-03**

(52) **U.S. Cl.**
USPC **D14/126**

(58) **Field of Classification Search**
USPC ..... D14/125–134, 239, 371, 136, 374–377, D14/440, 450, 448, 336, 342, 159; 312/7.2; 348/836, 838, 180, 184, 325, 739; 341/12; 248/917–924, 465; 345/104, 345/133, 156, 168, 87, 173; 720/605, 669, 720/600, 655; 369/99, 197; 455/344, 347; D21/329, 515, 577, 622, 333, 433, 448, D21/452, 450, 331; D6/477, 479, 300–310; 273/148 B; 446/484, 175, 356; D10/15, D10/26
See application file for complete search history.

(56) **References Cited**

U.S. PATENT DOCUMENTS

D469,432	S	*	1/2003	Tsuji	D14/375
D517,549	S	*	3/2006	Depay	D14/375
D550,222	S	*	9/2007	Park	D14/375
D556,709	S	*	12/2007	Kim et al.	D14/126
D558,200	S	*	12/2007	Tsai	D14/375
D603,815	S	*	11/2009	Hirasawa et al.	D14/126
D622,238	S	*	8/2010	Chow	D14/126
D624,895	S	*	10/2010	Kasuga et al.	D14/126
D635,942	S	*	4/2011	Kim et al.	D14/126
D653,636	S	*	2/2012	Lee et al.	D14/126
D663,705	S	*	7/2012	Park et al.	D14/126
D674,763	S	*	1/2013	Kim et al.	D14/126
D677,638	S	*	3/2013	Kim et al.	D14/126

* cited by examiner

Primary Examiner — Raphael Barkai
(74) *Attorney, Agent, or Firm* — Birch, Stewart, Kolasch & Birch, LLP

(57) **CLAIM**

The ornamental design for a liquid crystal display (LCD) monitor, as shown and described.

DESCRIPTION

FIG. **1** is a perspective view of a liquid crystal display (LCD) monitor showing our new design;
FIG. **2** is a front view thereof;
FIG. **3** is a rear view thereof;
FIG. **4** is a left side view thereof where the right side view is a mirror image;
FIG. **5** is a top plan view thereof;
FIG. **6** is a bottom plan view thereof; and,
FIG. **7** is a reference perspective view thereof in a condition that the screen of the liquid crystal display (LCD) monitor is swivelled at an angle of 90 degrees.
The broken lines are for illustrative purposes only and form no part of the claimed design.

1 Claim, 6 Drawing Sheets

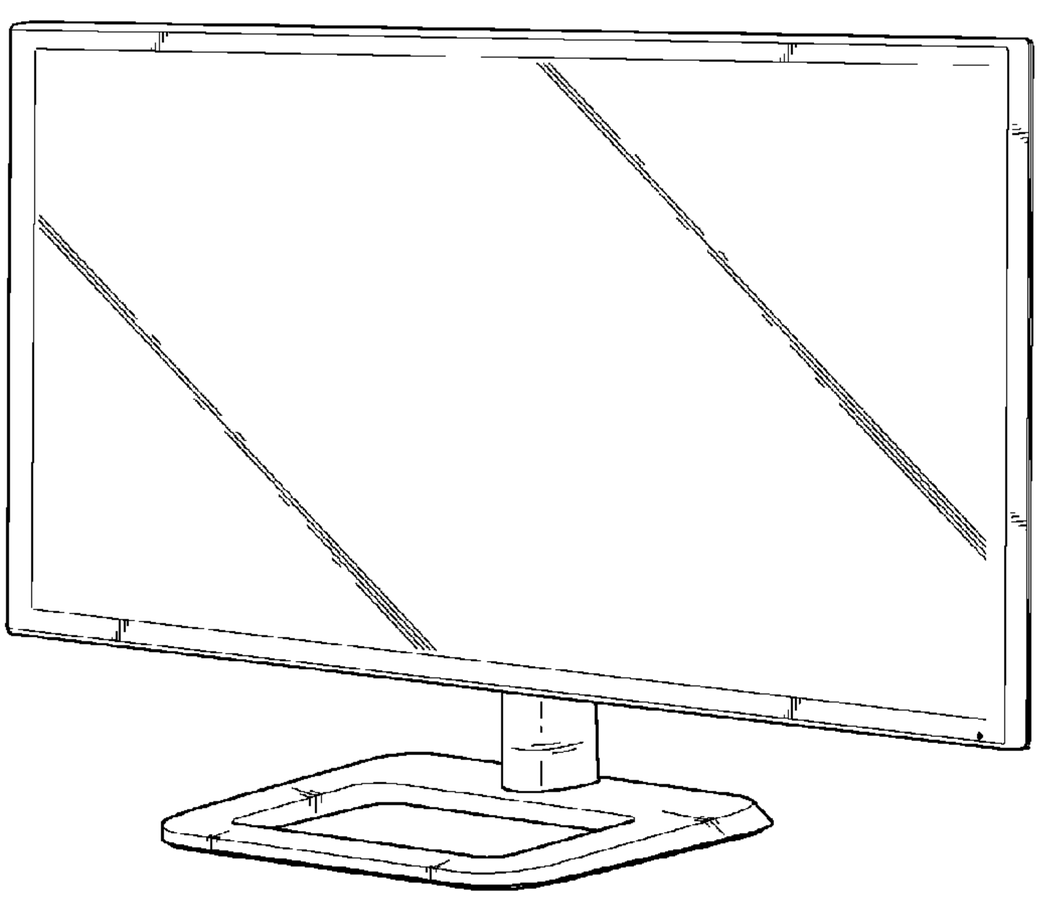

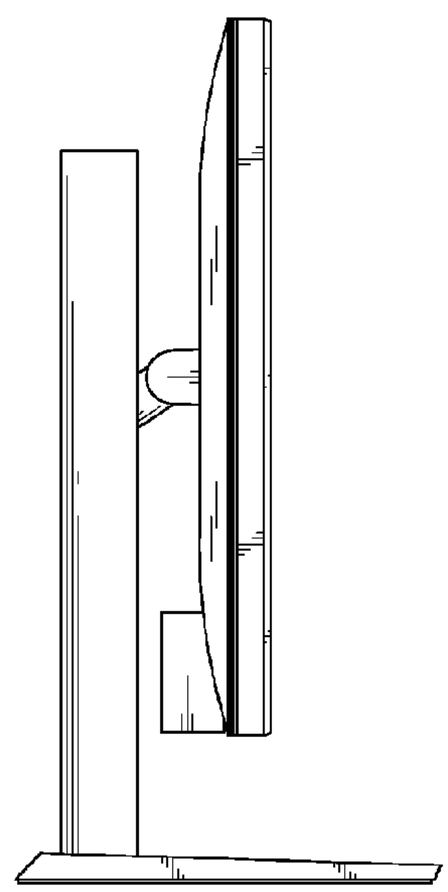

FIG. 1

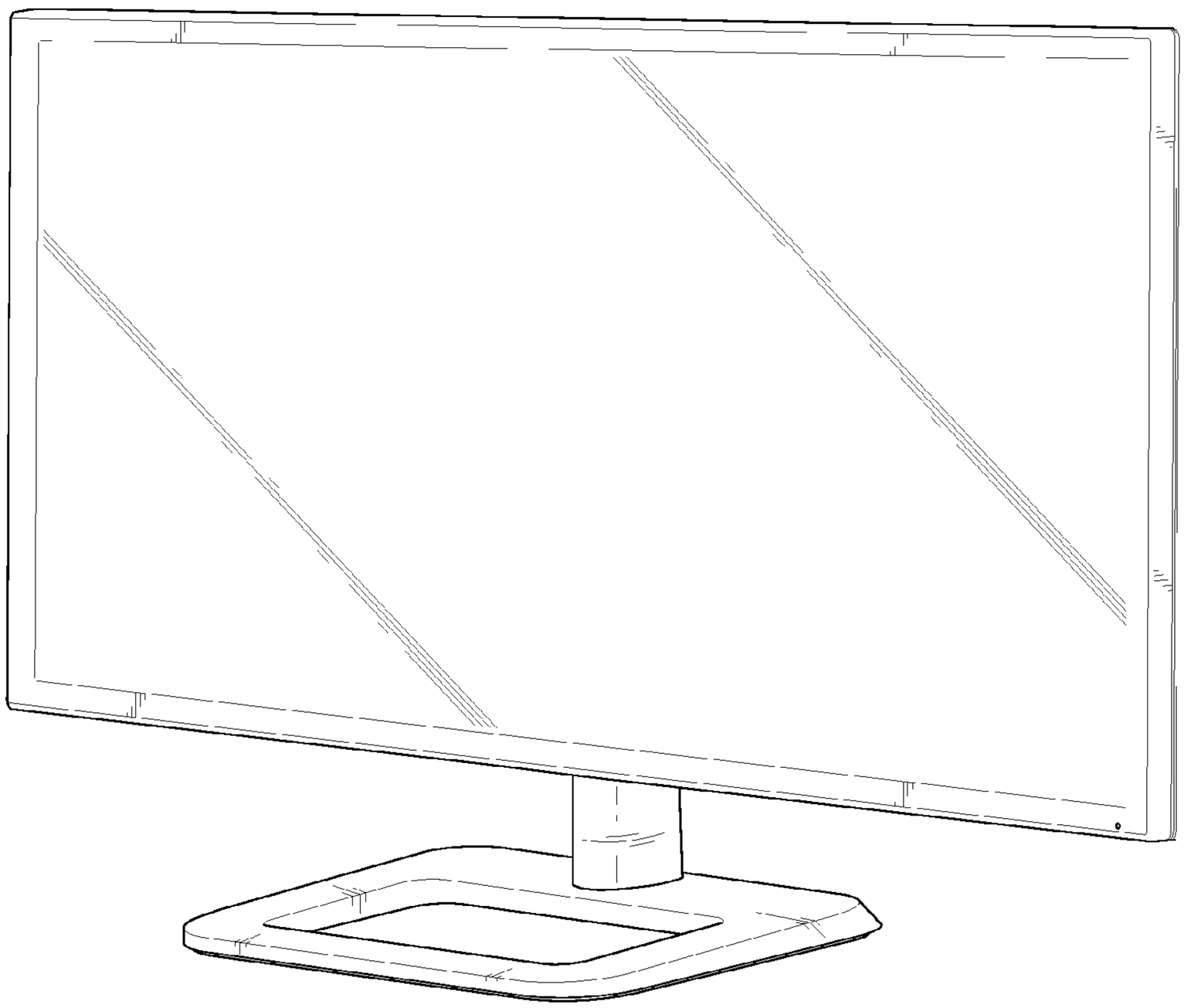

FIG. 2

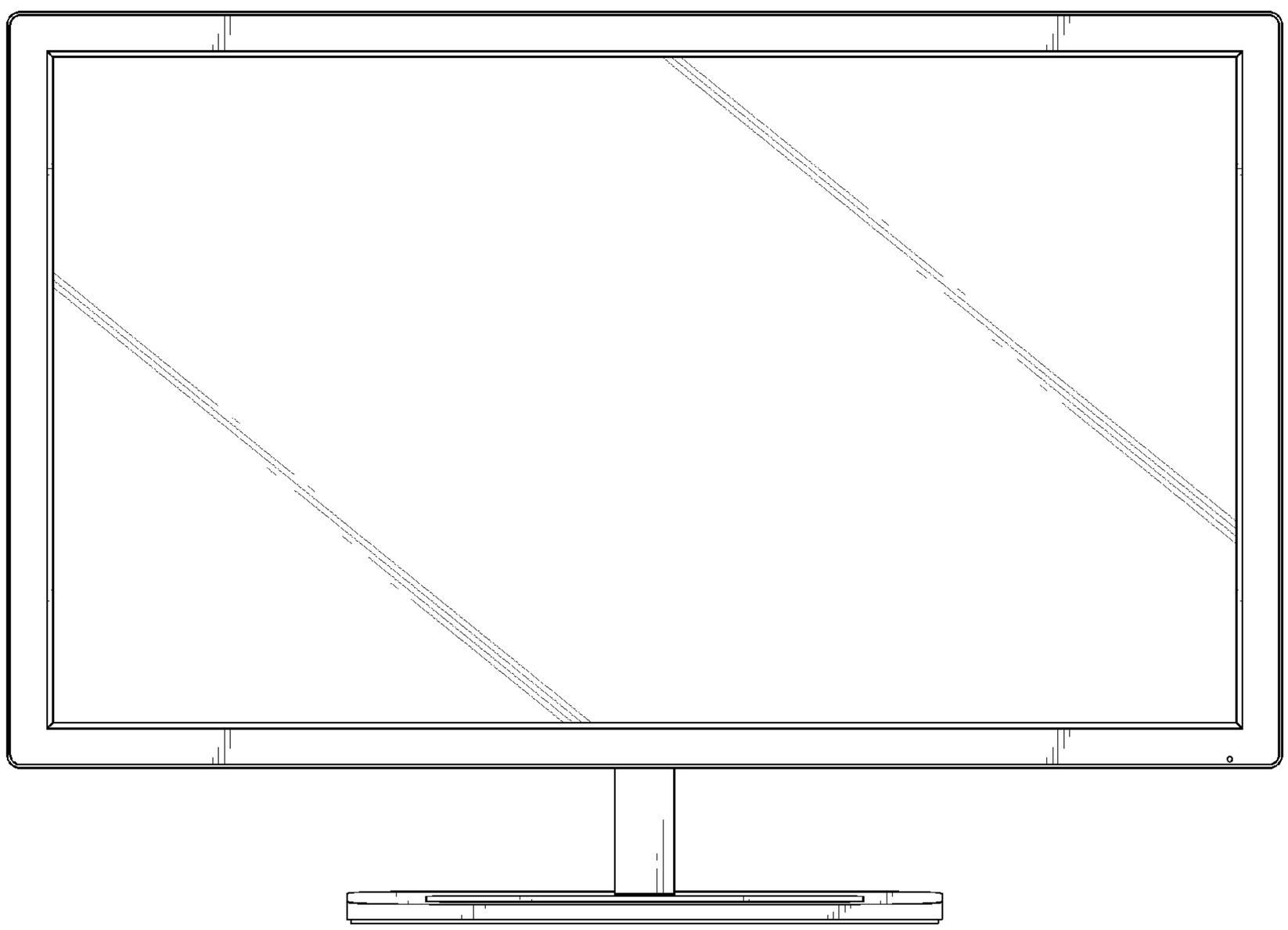

FIG. 3

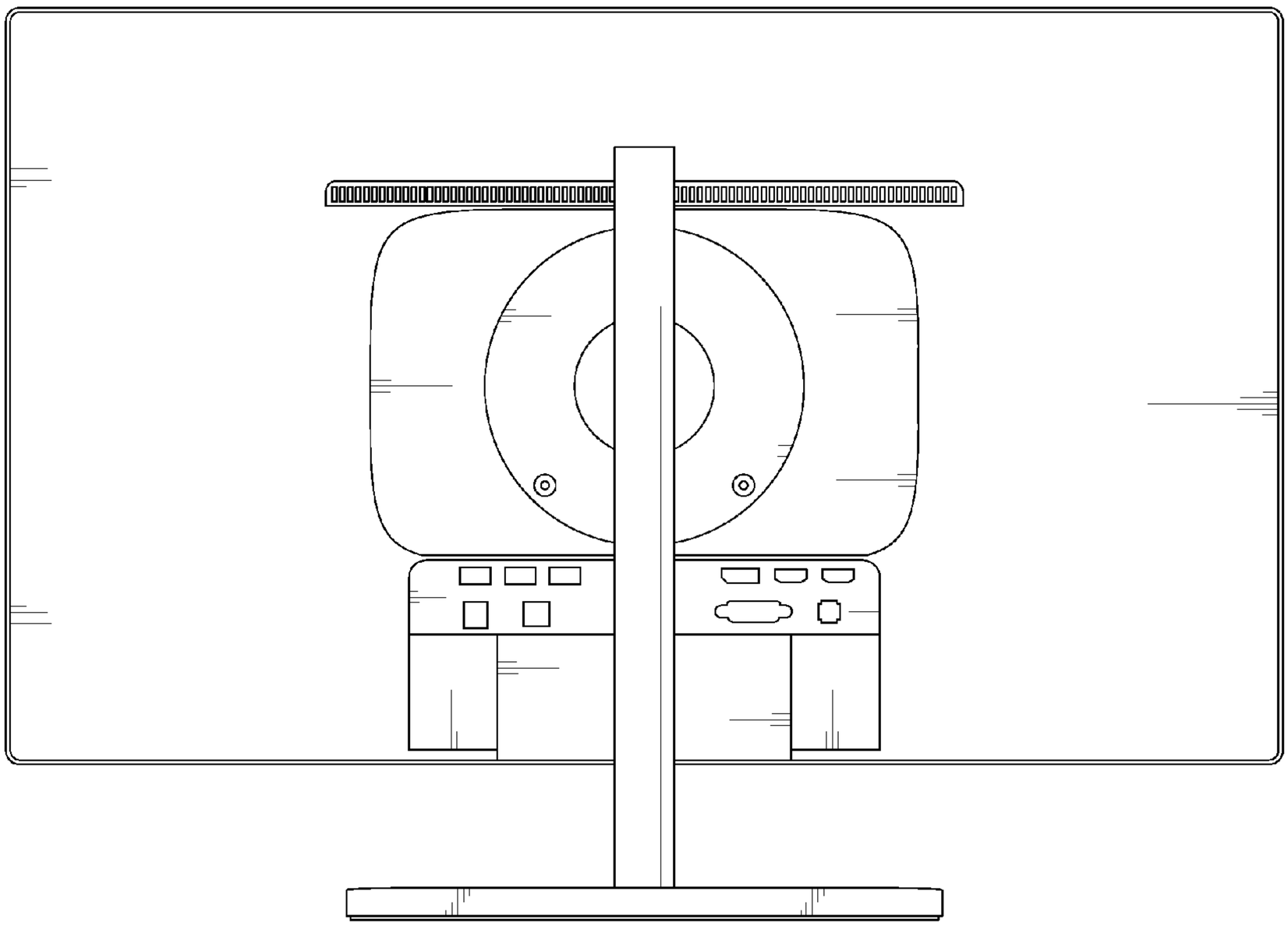

FIG. 4

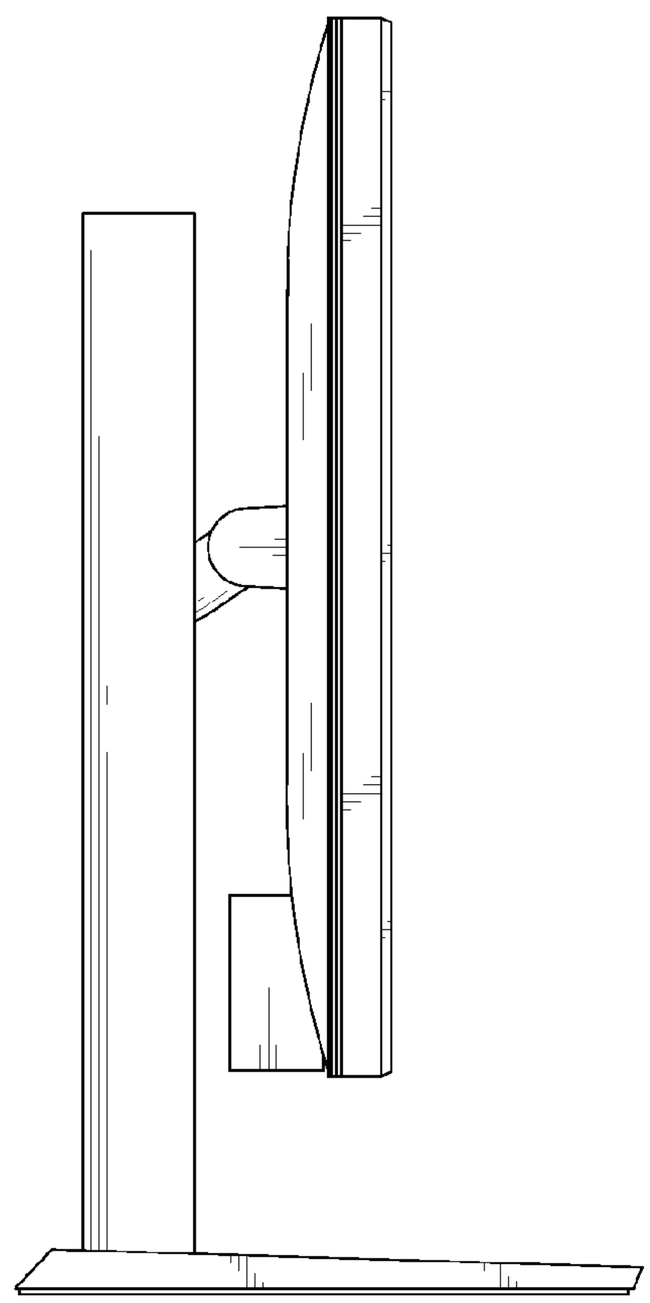

FIG. 5

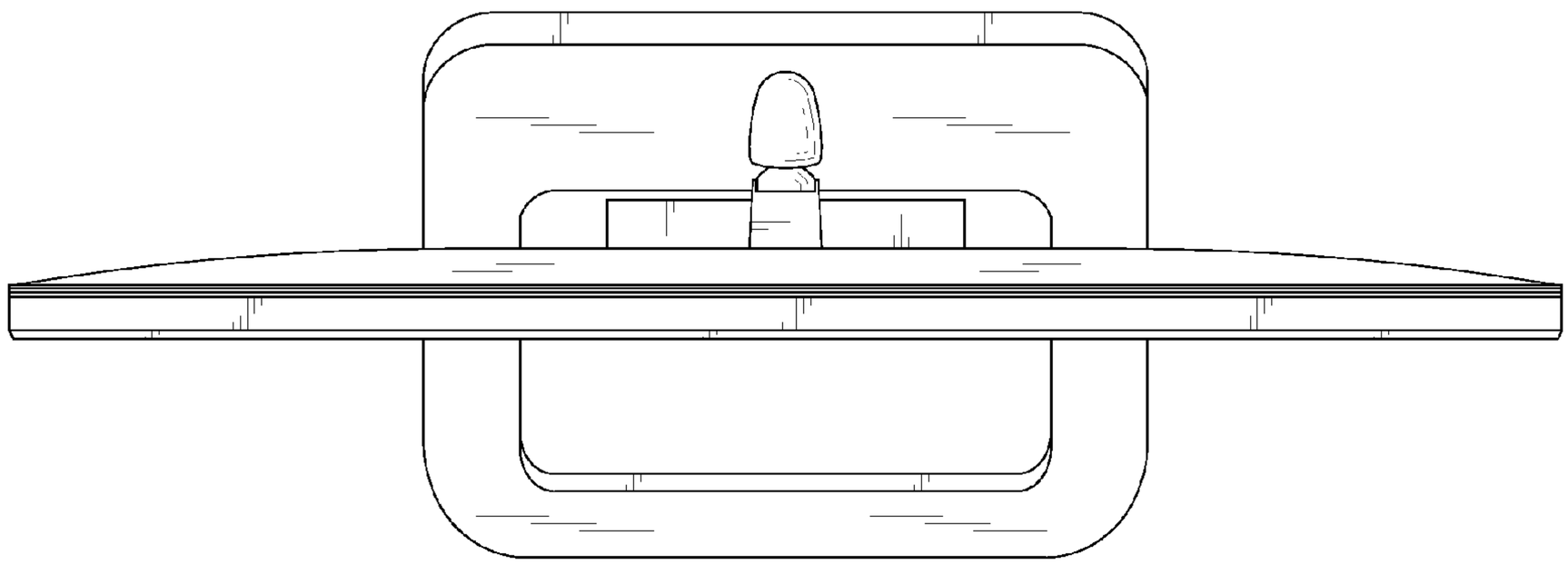

FIG. 6

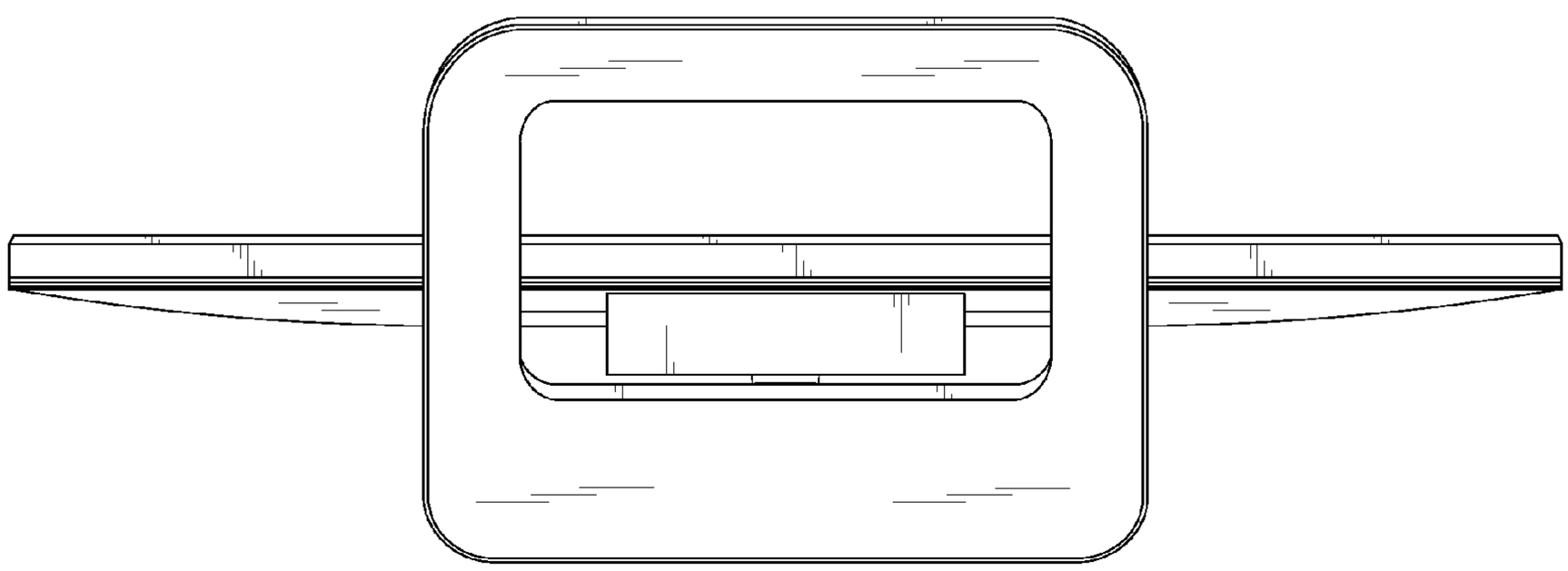
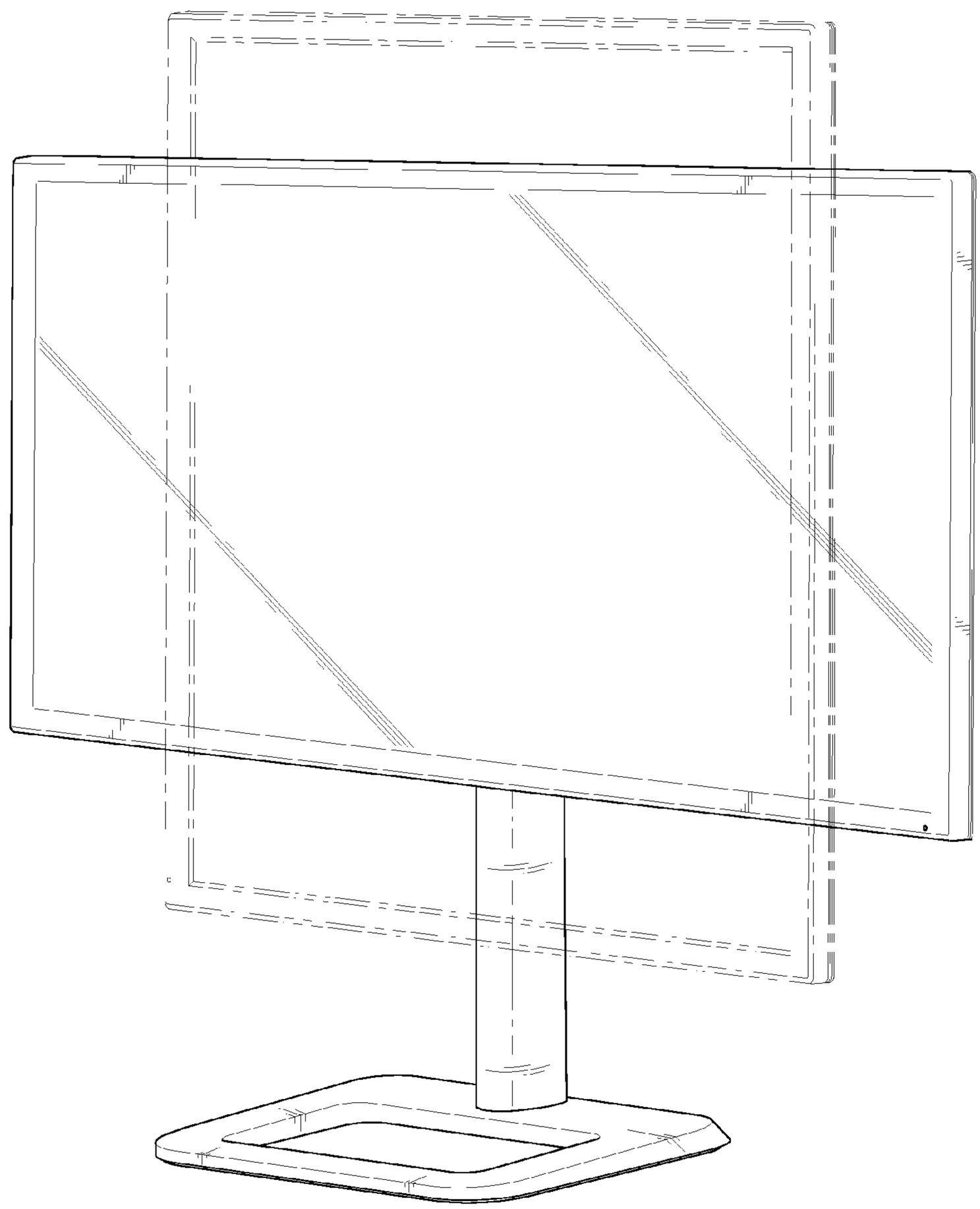
FIG. 7