US00D693929S

(12) United States Design Patent

Fagan et al.

(10) Patent No.: US D693,929 S
(45) Date of Patent: ** Nov. 19, 2013

(54) **INTRAMEDULLARY TANG ACTUATOR**

(71) Applicant: **Orthopedic Designs North American, Inc.**, Tampa, FL (US)

(72) Inventors: **Lance Fagan**, Tampa, FL (US); **Luis Vega**, Tampa, FL (US)

(**) Term: **14 Years**

(21) Appl. No.: **29/439,642**

(22) Filed: **Dec. 13, 2012**

(51) **LOC (9) Cl.** **24-00**

(52) **U.S. Cl.**
USPC **D24/171**

(58) **Field of Classification Search**
USPC ..... D24/146, 185, 135, 140, 147, 155, 139, D24/114, 212–213, 192, 215, 130, 133, 171, D24/141; 601/33, 134; 606/900, 86 A, 104, 606/90, 88, 86 R, 324, 295, 288, 68, 272, 606/267, 265, 266, 257, 251, 246, 57, 54, 606/916, 105, 96, 80, 60, 53, 64, 62, 63, 606/66; 128/845, 882, 893; 602/5, 6, 11, 602/12, 30, 40, 39, 28, 29; D29/121.2; 36/93, 94; 408/214
See application file for complete search history.

(56) **References Cited**

U.S. PATENT DOCUMENTS

3,986,504	A	10/1976	Avila	
5,645,589	A	7/1997	Li	
5,702,215	A	12/1997	Li	
5,976,139	A	11/1999	Bramlet	
6,077,264	A	6/2000	Chemello	
6,120,504	A *	9/2000	Brumback et al.	606/62
6,183,474	B1	2/2001	Bramlet et al.	
6,443,954	B1	9/2002	Bramlet et al.	
6,447,546	B1	9/2002	Bramlet et al.	
6,488,684	B2	12/2002	Bramlet et al.	
6,554,833	B2	4/2003	Levy et al.	
6,575,973	B1	6/2003	Shekalim	
6,648,889	B2	11/2003	Bramlet et al.	
6,695,844	B2	2/2004	Bramlet et al.	
D638,125	S *	5/2011	Velikov	D24/146
8,298,234	B2 *	10/2012	Ferrante et al.	606/64
8,382,760	B2 *	2/2013	Mantovani et al.	606/63
2006/0229617	A1	10/2006	Meller et al.	
2008/0161805	A1	7/2008	Saravia et al.	
2008/0287949	A1 *	11/2008	Keith et al.	606/62
2012/0143192	A1 *	6/2012	Watanabe et al.	606/64
2012/0271309	A1 *	10/2012	Watanabe et al.	606/64
2013/0158552	A1 *	6/2013	Overes et al.	606/64

* cited by examiner

Primary Examiner — Robert M Spear
Assistant Examiner — Rhea Shields
(74) *Attorney, Agent, or Firm* — Larson & Larson, P.A.; Frank Liebenow; Justin P. Miller

(57) **CLAIM**

We claim the ornamental design for an intramedullary tang actuator, as shown and described.

DESCRIPTION

FIG. **1** is an isometric view of the intramedullary tang actuator showing my new design;
FIG. **2** is a front view thereof;
FIG. **3** is a back view thereof;
FIG. **4** is a right side view thereof;
FIG. **5** is a left side view thereof;
FIG. **6** is a top plan view thereof;
FIG. **7** is a bottom plan view thereof; and,
FIG. **8** is a cross-sectional view thereof.

1 Claim, 7 Drawing Sheets

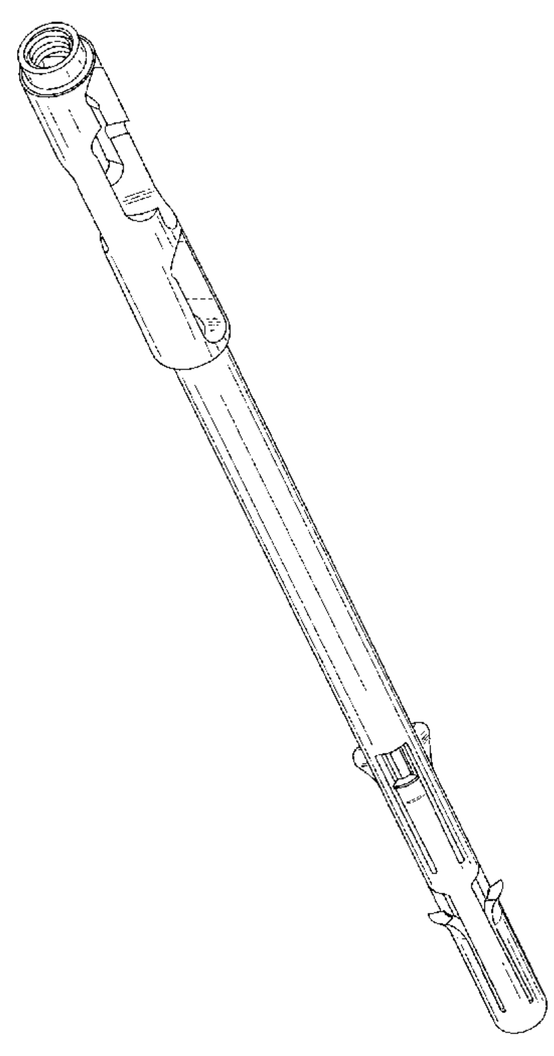

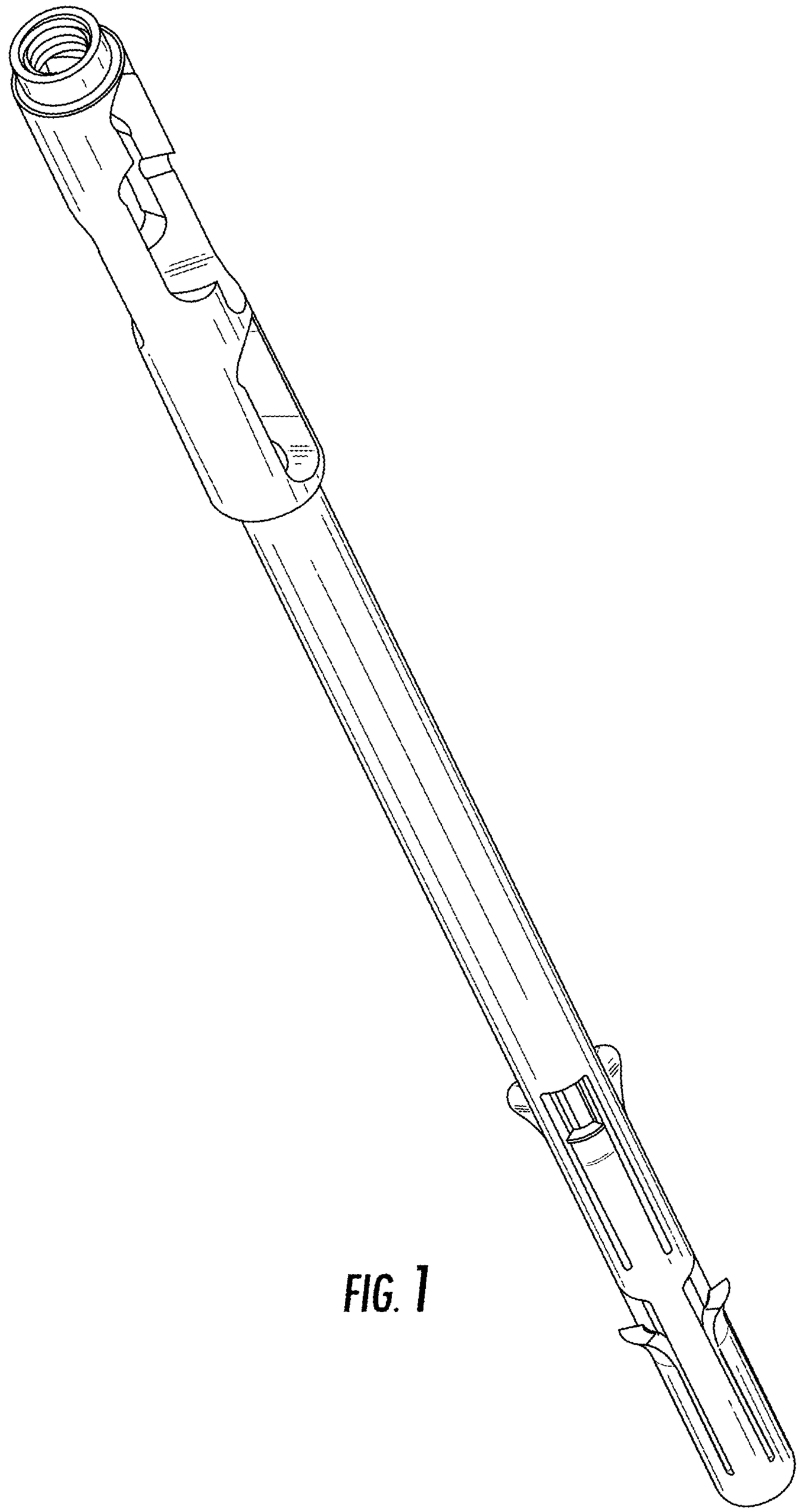

FIG. 1

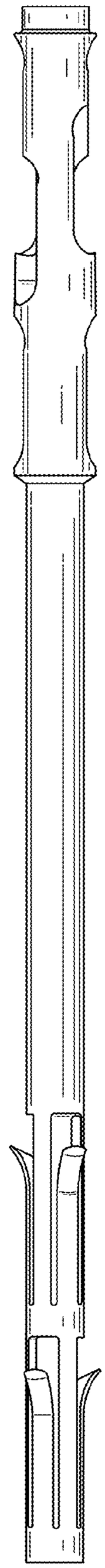

FIG. 2

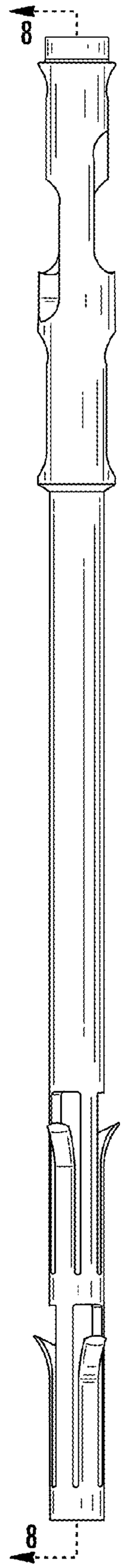

FIG. 3

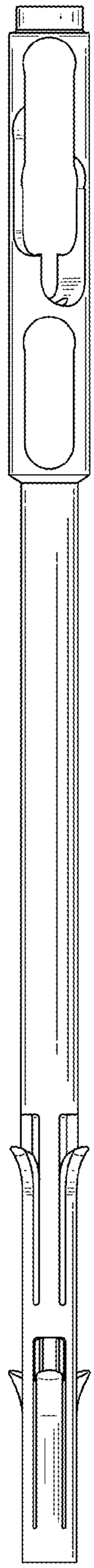

FIG. 4

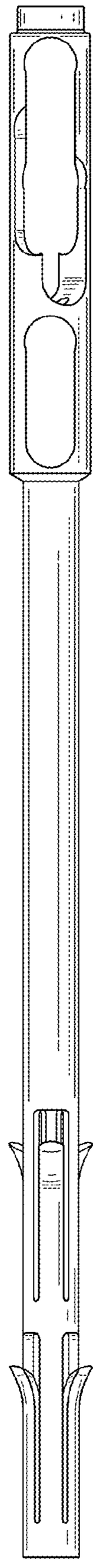

FIG. 5

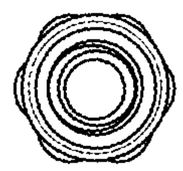

FIG. 6

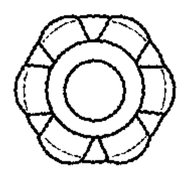

FIG. 7

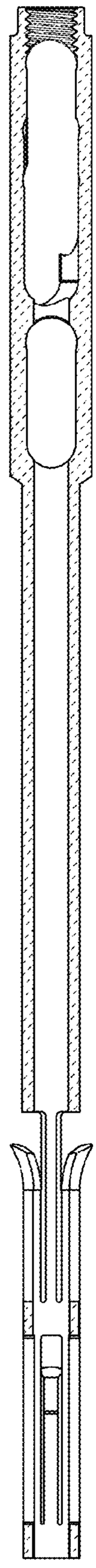

FIG. 8