US00D693459S

# (12) United States Design Patent
Prentice et al.

(10) Patent No.: US D693,459 S
(45) Date of Patent: ** Nov. 12, 2013

(54) **PATIENT INTERFACE ASSEMBLY**

(75) Inventors: **Craig Robert Prentice**, Auckland (NZ); **Bernard Tsz Lun Ip**, Auckland (NZ); **Richard Boyes**, Auckland (NZ); **Thomas Mark Richardson**, Auckland (NZ); **Gareth McDermott**, Auckland (NZ); **Jonathan Mark Downey**, Auckland (NZ); **Matthew Roger Stephenson**, Auckland (NZ)

(73) Assignee: **Fisher & Paykel Healthcare Limited**, Auckland (NZ)

(**) Term: **14 Years**

(21) Appl. No.: **29/401,929**

(22) Filed: **Sep. 16, 2011**

(51) **LOC (9) Cl.** ..... **29-02**

(52) **U.S. Cl.**
USPC ..... **D24/110.4**; D24/110.1

(58) **Field of Classification Search**
USPC ..... D24/110.1–110.6; 128/204.18–207.13
See application file for complete search history.

(56) **References Cited**

U.S. PATENT DOCUMENTS

| | | | | |
|---|---|---|---|---|
| 4,167,185 | A | 9/1979 | Lewis | |
| 6,374,826 | B1 * | 4/2002 | Gunaratnam et al. | 128/206.27 |
| 6,467,483 | B1 | 10/2002 | Kopacko et al. | |
| D476,732 | S * | 7/2003 | Smart | D24/110.4 |
| 6,651,663 | B2 | 11/2003 | Barnett et al. | |
| D486,226 | S * | 2/2004 | Guney et al. | D24/110.1 |
| D549,322 | S * | 8/2007 | Stallard et al. | D24/110.1 |
| D555,785 | S * | 11/2007 | McAuley et al. | D24/110.1 |
| D557,411 | S * | 12/2007 | Smart et al. | D24/110.1 |
| D558,334 | S * | 12/2007 | Stallard et al. | D24/110.1 |
| D582,546 | S * | 12/2008 | Fujiura et al. | D24/110.1 |
| D583,930 | S * | 12/2008 | McAuley et al. | D24/110.1 |
| D586,458 | S * | 2/2009 | Kooij et al. | D24/110.1 |
| D586,906 | S * | 2/2009 | Stallard et al. | D24/110.1 |
| 7,523,754 | B2 | 4/2009 | Lithgow et al. | |
| D595,841 | S * | 7/2009 | McAuley et al. | D24/110.1 |
| D597,661 | S * | 8/2009 | Reid et al. | D24/110.1 |
| 7,665,464 | B2 | 2/2010 | Kopacko et al. | |
| D612,483 | S * | 3/2010 | Chang | D24/110.1 |
| D612,932 | S * | 3/2010 | Davidson et al. | D24/110.1 |
| D614,763 | S * | 4/2010 | Maurer et al. | D24/110.1 |
| D624,642 | S * | 9/2010 | Collazo et al. | D24/110.1 |
| 7,827,990 | B1 | 11/2010 | Melidis et al. | |
| 7,861,718 | B2 * | 1/2011 | Janbakhsh et al. | 128/205.25 |
| D639,419 | S * | 6/2011 | Eves et al. | D24/110.1 |
| D639,932 | S * | 6/2011 | D'Souza et al. | D24/110.1 |
| D645,955 | S * | 9/2011 | Kooij et al. | D24/110.1 |
| D653,328 | S * | 1/2012 | Eves et al. | D24/110.1 |
| D665,494 | S * | 8/2012 | Stallard et al. | D24/110.1 |
| 2007/0215161 | A1 | 9/2007 | Frater et al. | |
| 2007/0267017 | A1 | 11/2007 | McAuley et al. | |
| 2008/0110464 | A1 | 5/2008 | Davidson et al. | |
| 2010/0122701 | A1 * | 5/2010 | Gunaratnam et al. | 128/205.25 |

FOREIGN PATENT DOCUMENTS

| | | |
|---|---|---|
| EP | 1258266 | 11/2002 |
| NZ | 551715 | 2/2011 |
| WO | WO 01/32250 | 5/2001 |
| WO | WO 2005/094928 | 10/2005 |
| WO | WO 2005/123166 | 12/2005 |
| WO | WO 2006/074513 | 7/2006 |
| WO | WO 2010/009877 | 1/2010 |
| WO | WO 2010/135785 | 12/2010 |

* cited by examiner

*Primary Examiner* — Richard E Chilcot
(74) *Attorney, Agent, or Firm* — Knobbe, Martens, Olson & Bear, LLP.

(57) **CLAIM**

The ornamental design for a patient interface assembly, as shown and described.

**DESCRIPTION**

FIG. **1** is a front perspective view of a patient interface which incorporates our design;
FIG. **2** is a rear perspective view of the patient interface of FIG. **1**;
FIG. **3** is a left side elevational view of the patient interface of FIG. **1**;
FIG. **4** is a right side elevational view of the patient interface of FIG. **1**;

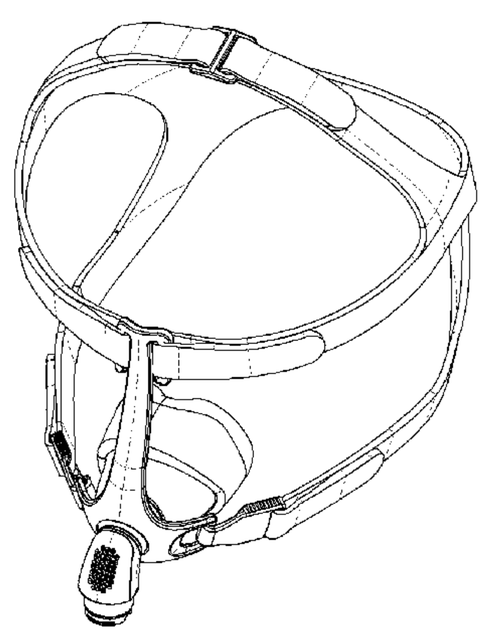

FIG. **5** is a front elevational view of the patient interface of FIG. **1**;
FIG. **6** is a rear elevational view of the patient interface of FIG. **1**;
FIG. **7** is a top elevational view of the patient interface of FIG. **1**;
FIG. **8** is a bottom elevational view of the patient interface of FIG. **1**;
FIG. **9** is a front perspective view of a headgear assembly of the patient interface of FIG. **1**;
FIG. **10** is a rear perspective view of the headgear assembly of FIG. **9**;
FIG. **11** is a left side elevational view of the headgear assembly of FIG. **9**;
FIG. **12** is a right side elevational view of the headgear assembly of FIG. **9**;
FIG. **13** is a front elevational view of the headgear assembly of FIG. **9**;
FIG. **14** is a rear elevational view of the headgear assembly of FIG. **9**;
FIG. **15** is a top elevational view of the headgear assembly of FIG. **9**;
FIG. **16** is a bottom elevational view of the headgear assembly of FIG. **9**;
FIG. **17** is a rear perspective view of a seal of the patient interface of FIG. **1**;
FIG. **18** is a front perspective view of a seal of the patient interface of FIG. **1**;
FIG. **19** is a left side elevational view of the seal of FIG. **17**;
FIG. **20** is a right side elevational view of the seal of FIG. **17**;
FIG. **21** is a rear elevational view of the seal of FIG. **17**;
FIG. **22** is a front elevational view of the seal of FIG. **17**;
FIG. **23** is a top elevational view of the seal of FIG. **17**;
FIG. **24** is a bottom elevational view of the seal of FIG. **17**;
FIG. **25** is a close-up of the view of FIG. **22**;
FIG. **26** is a cross-sectional view taken along line **26-26** of FIG. **25**;
FIG. **27** is a rear perspective view of a frame of the patient interface of FIG. **1**;
FIG. **28** is a left side elevational view of the frame of FIG. **27**;
FIG. **29** is a right side elevational view of the frame of FIG. **27**;
FIG. **30** is a front elevational view of the frame of FIG. **27**;
FIG. **31** is a rear perspective view of the frame of FIG. **27**;
FIG. **32** is a top elevational view of the frame of FIG. **27**;
FIG. **33** is a bottom elevational view of the frame of FIG. **27**;
FIG. **34** is a rear perspective view of an elbow of the patient interface of FIG. **1**;
FIG. **35** is a right side elevational view of the elbow of FIG. **34**;
FIG. **36** is a left side elevational view of the elbow of FIG. **34**;
FIG. **37** is a rear elevational view of the elbow of FIG. **34**;
FIG. **38** is a front elevational view of the elbow of FIG. **34**;
FIG. **39** is a top elevational view of the elbow of FIG. **34**;
FIG. **40** is a bottom elevational view of the elbow of FIG. **34**;
FIG. **41** is a perspective view of the headstrap of the headgear assembly of FIG. **9** oriented in a vertical plane;
FIG. **42** is a front elevational view of the headstrap of FIG. **41**, the rear elevational view being identical to the view of FIG. **42**;
FIG. **43** is a top elevational view of the headstrap of FIG. **41**;
FIG. **44** is a bottom elevational view of the headstrap of FIG. **41**; and,
FIG. **45** is a left side elevational view of the headstrap of FIG. **41**, the right side elevational view being identical to the view of FIG. **45**.
The headgear assembly, the seal, the frame, the elbow and headstrap of the patient interfaces assembly have been illustrated and described separately for clarity of disclosure.

**1 Claim, 14 Drawing Sheets**

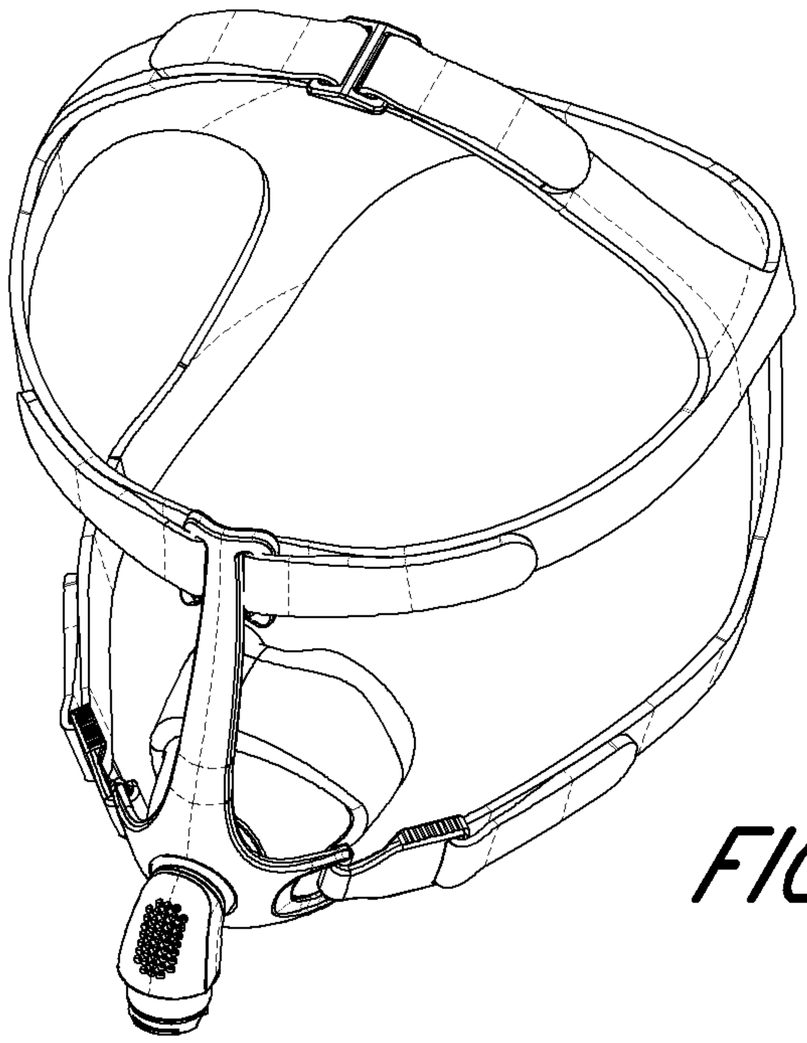

FIG. 1

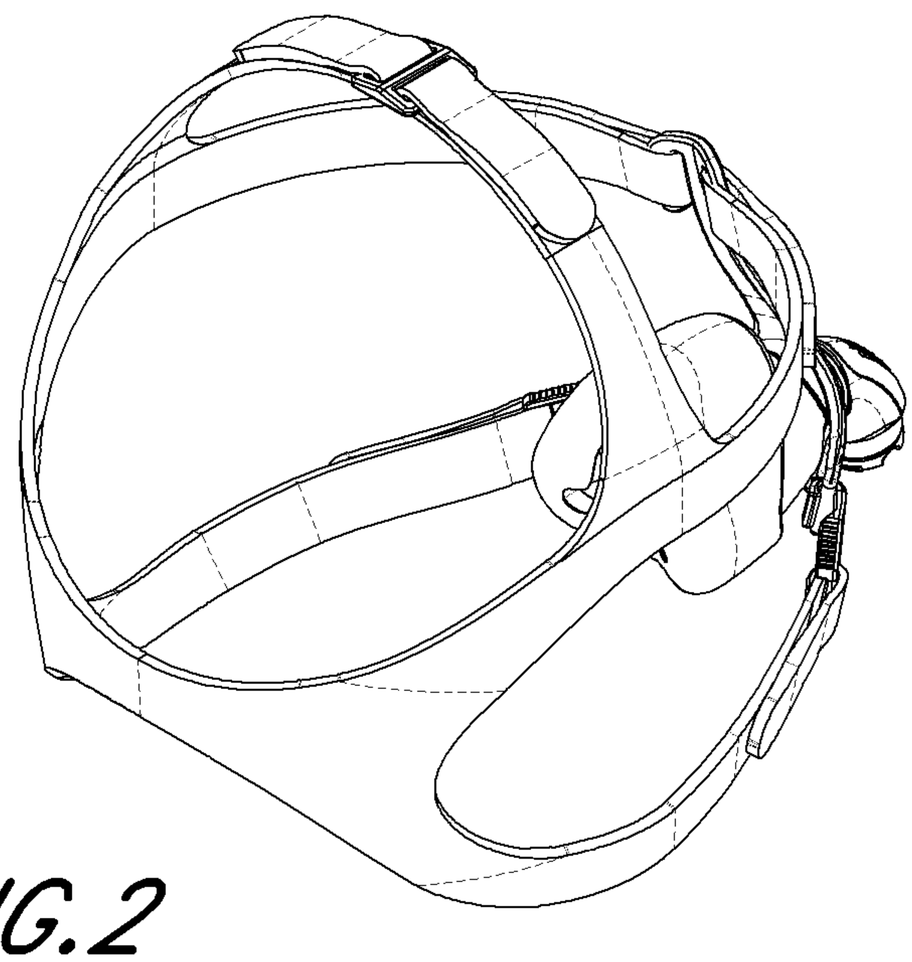

FIG. 2

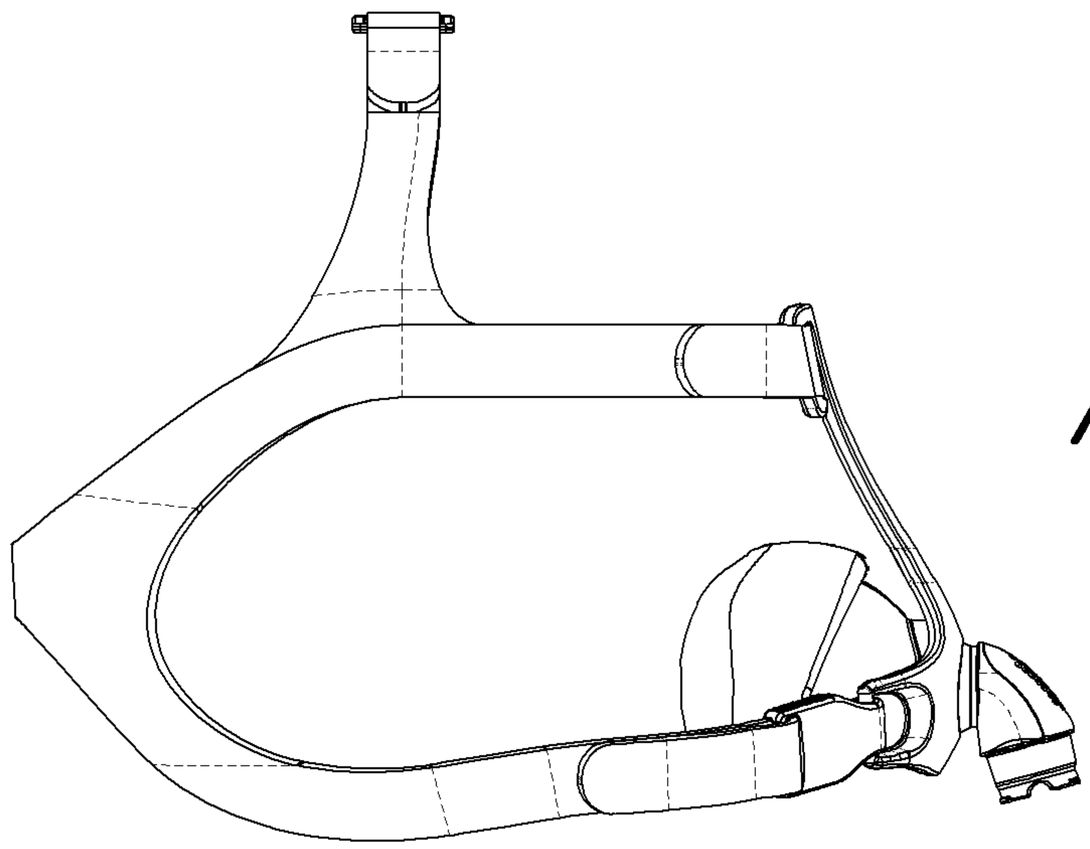

FIG. 3

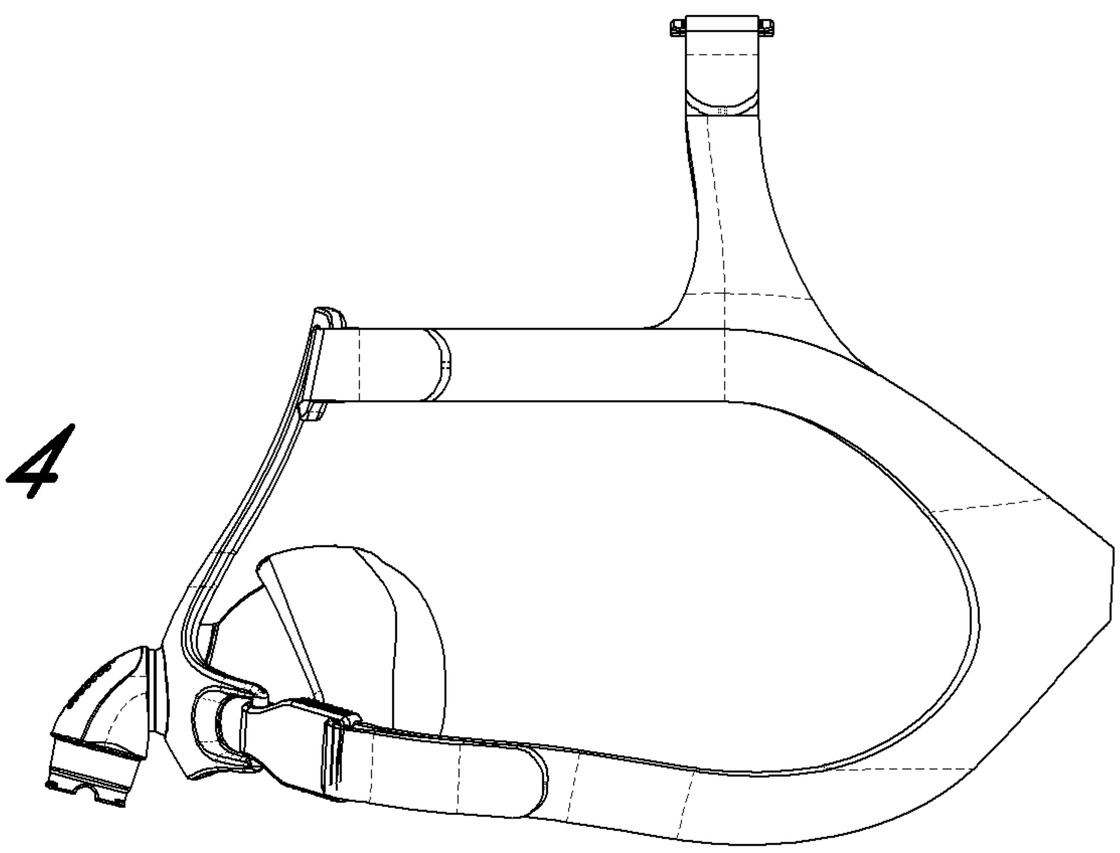

FIG. 4

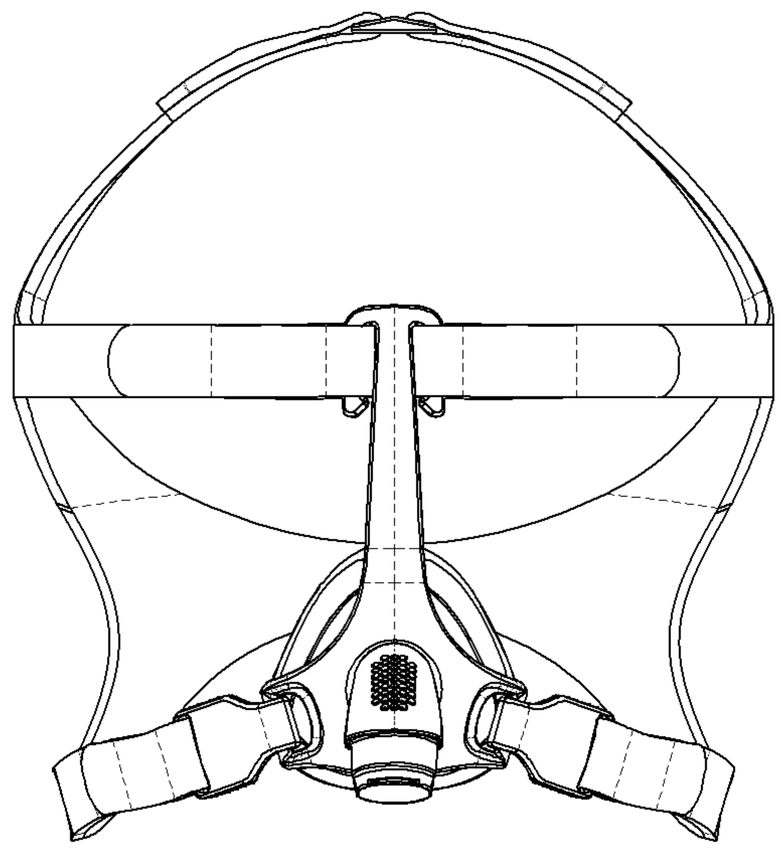

FIG. 5

FIG. 6

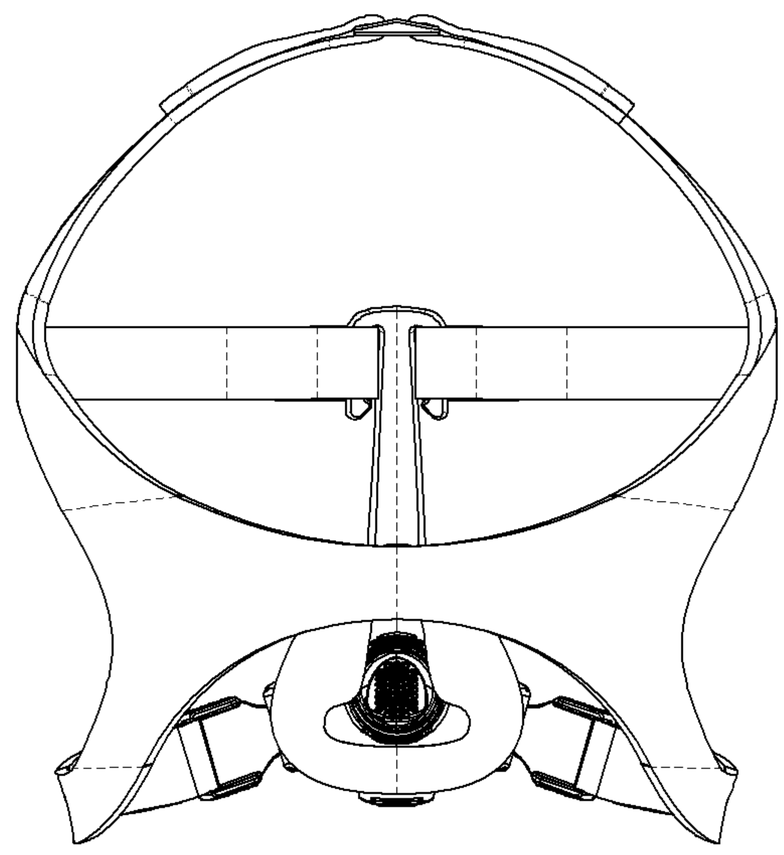

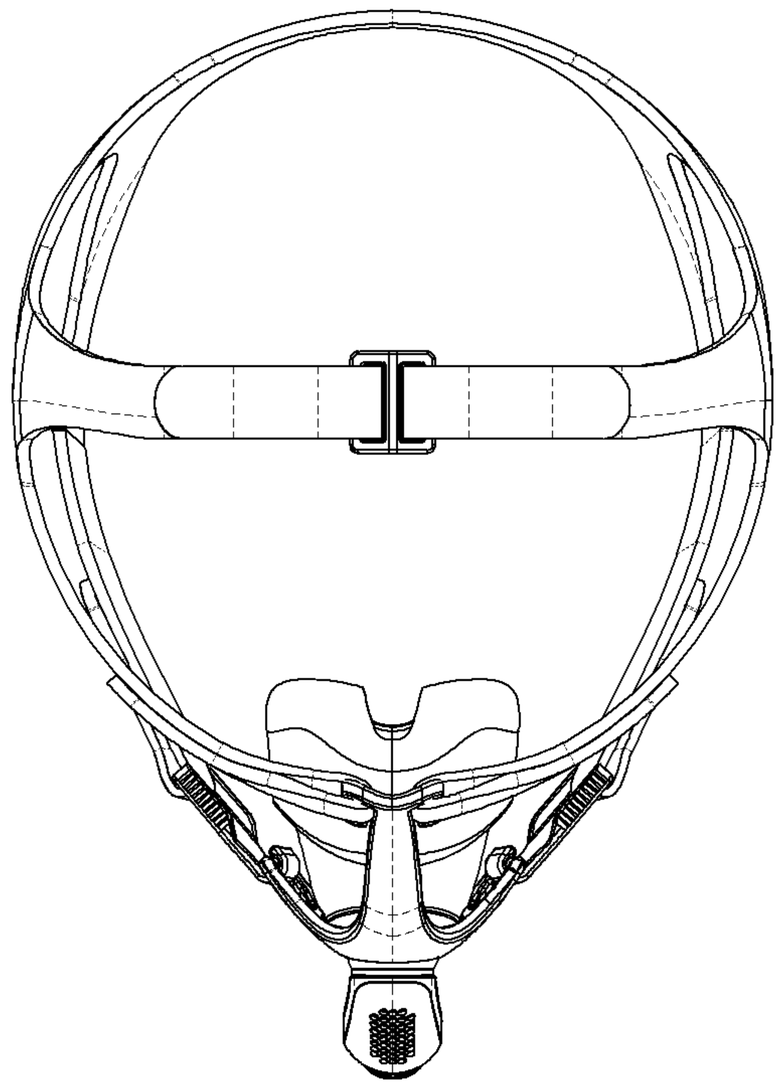

FIG. 7

FIG. 8

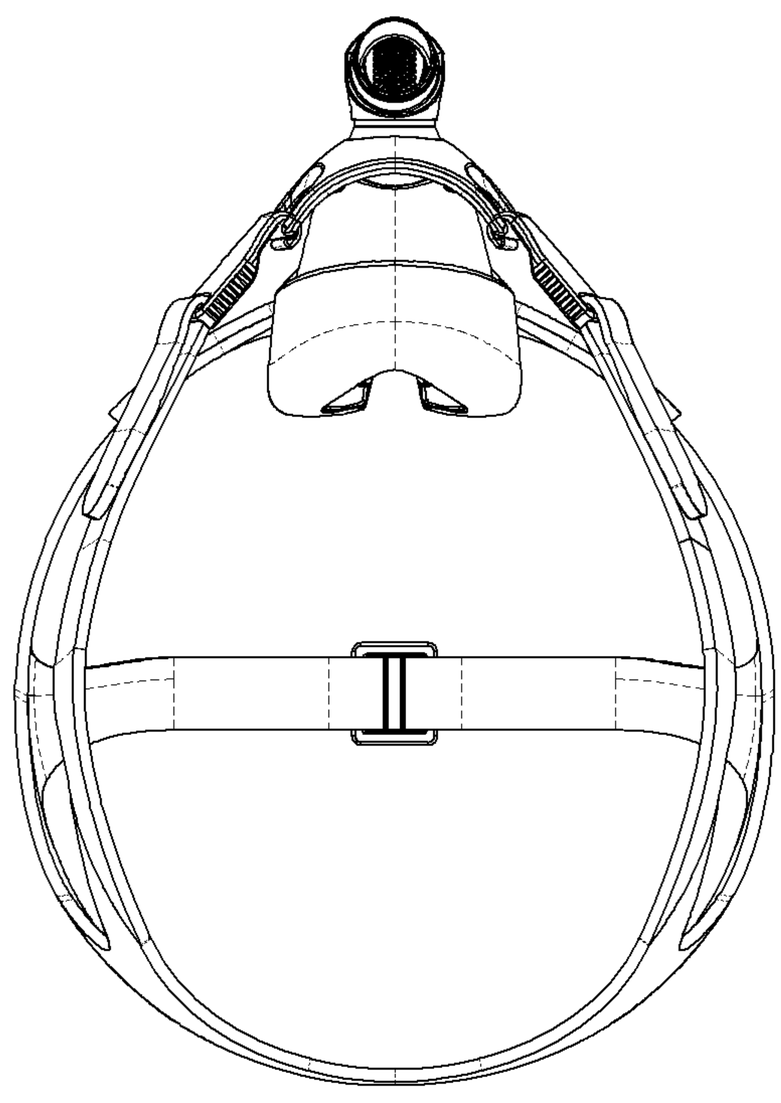

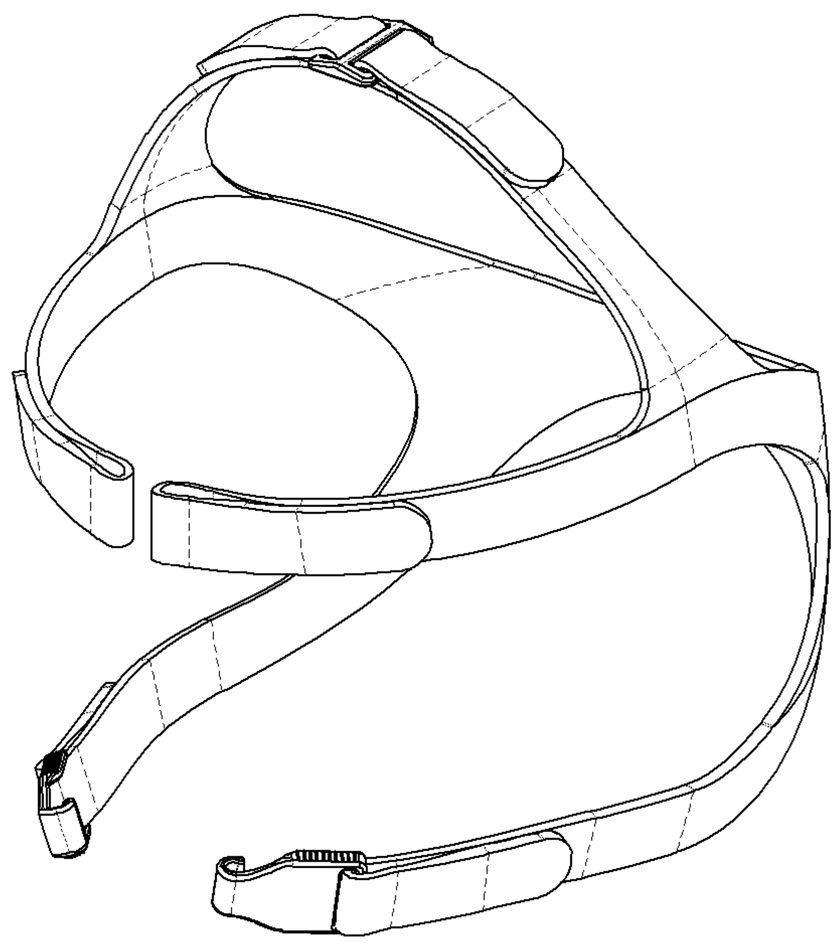

FIG. 9

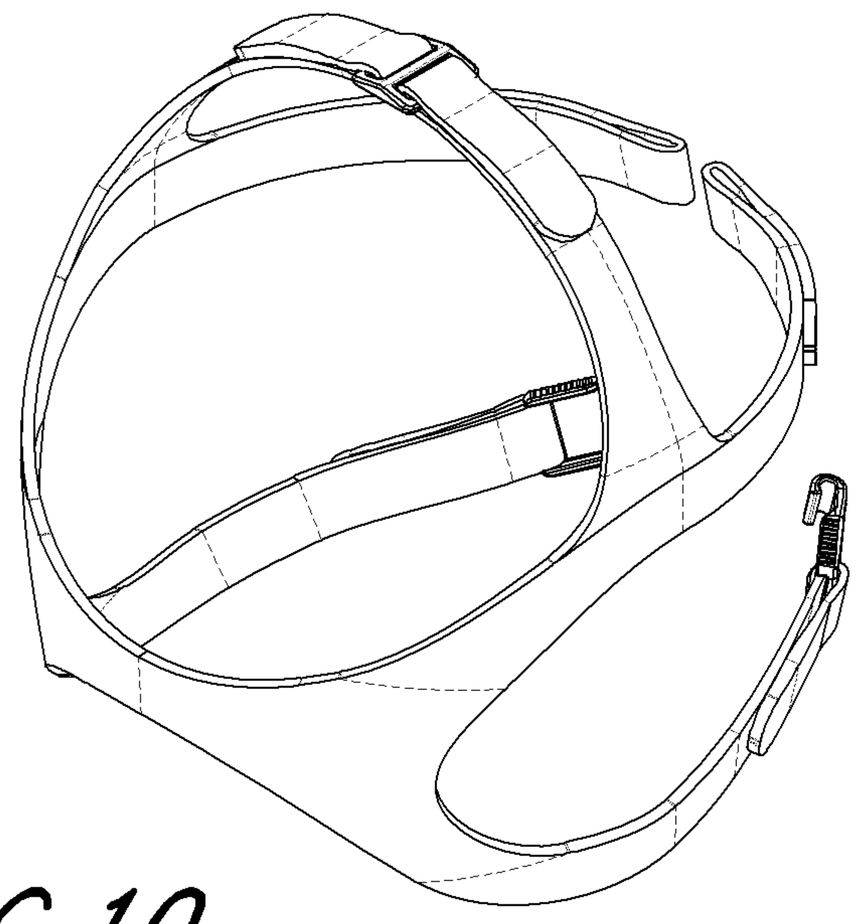

FIG. 10

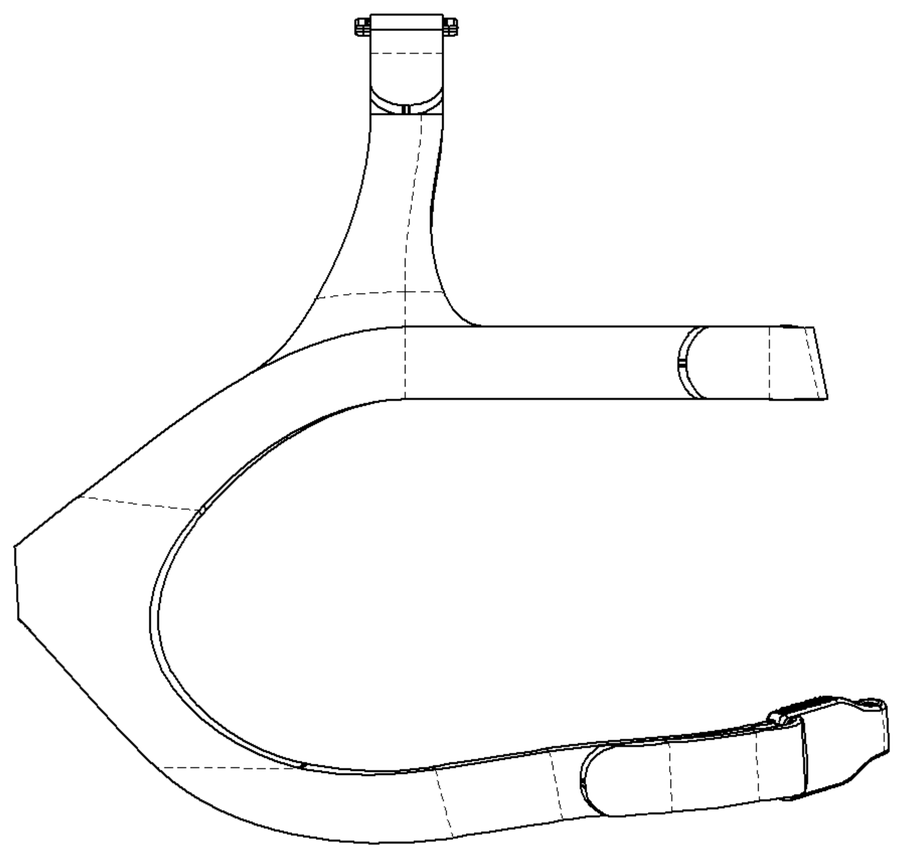

FIG. 11

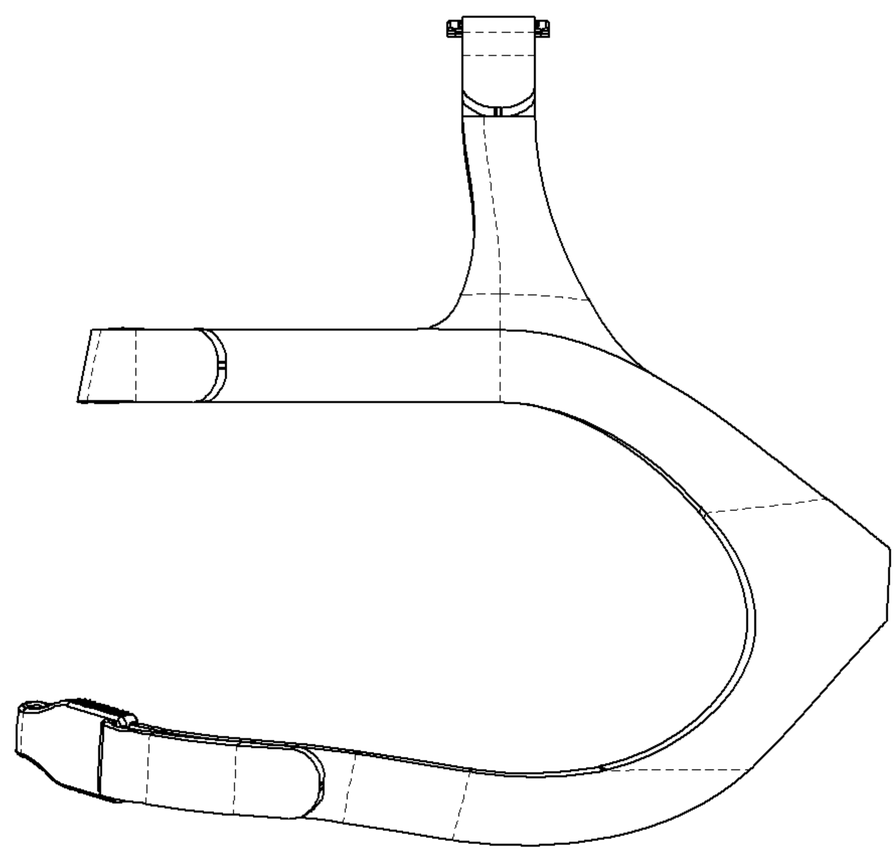

FIG. 12

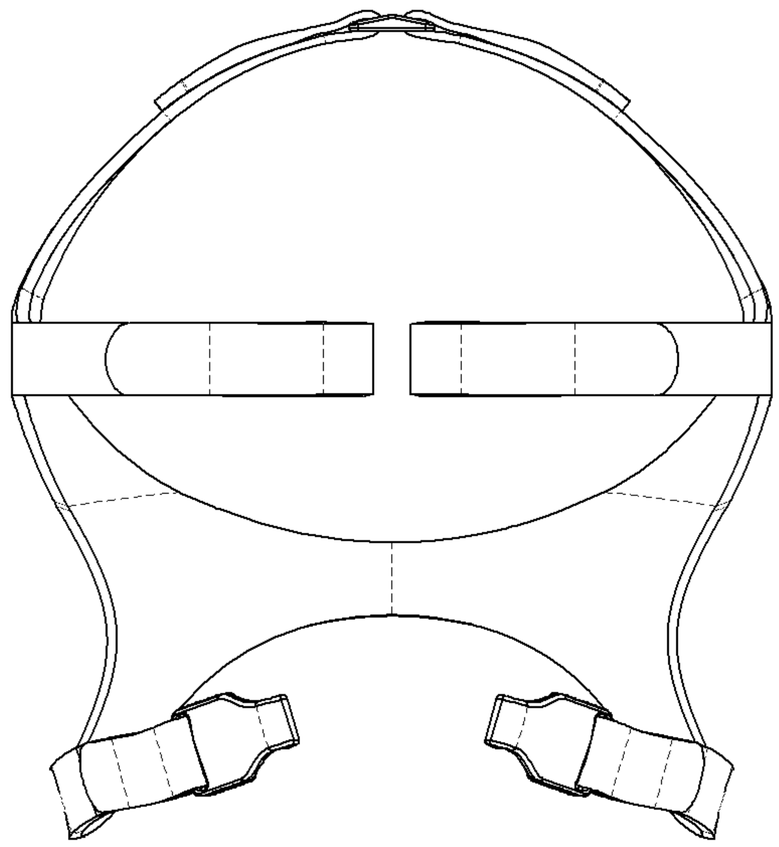

FIG. 13

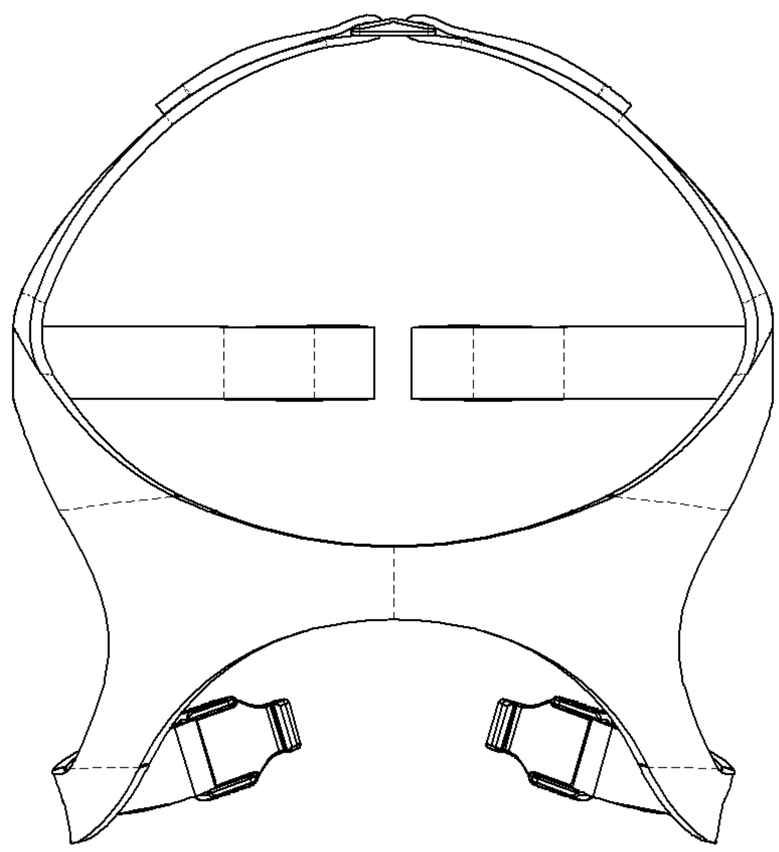

FIG. 14

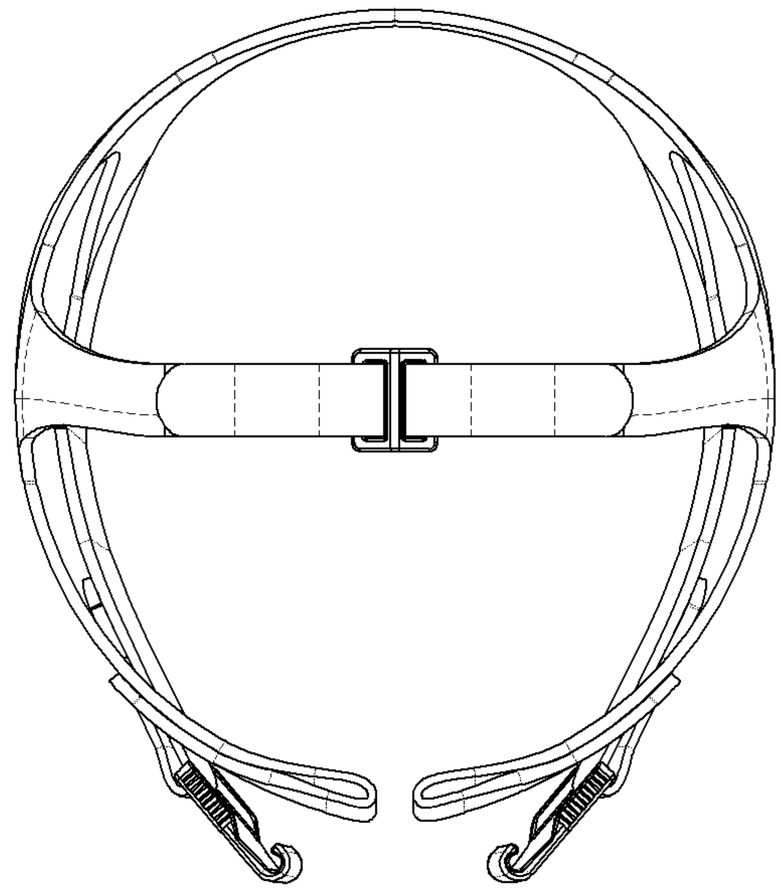

FIG. 15

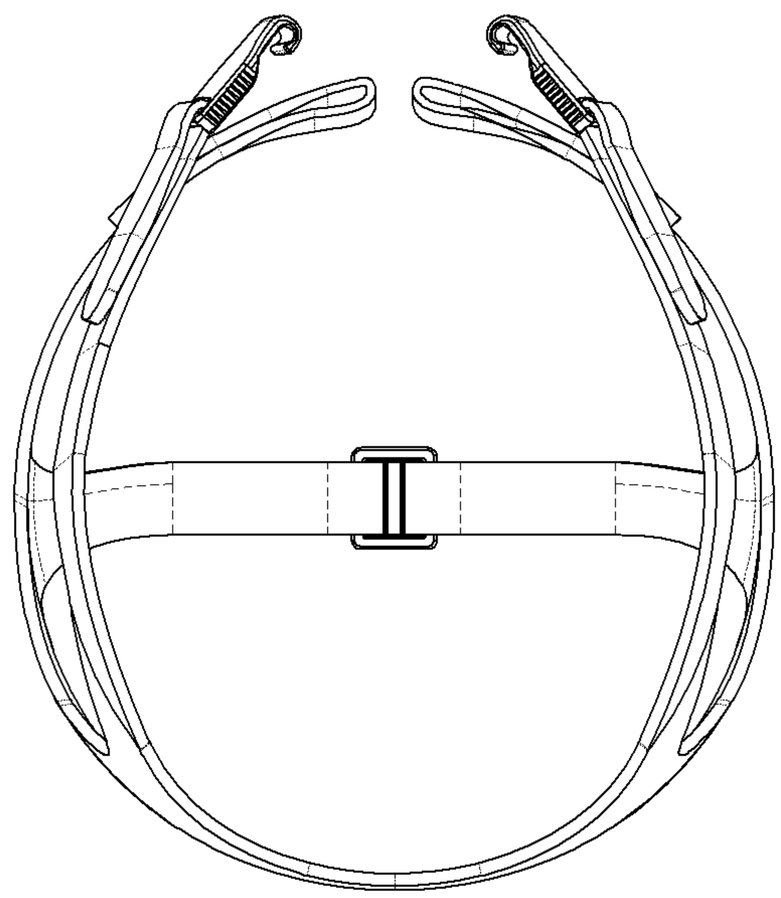

FIG. 16

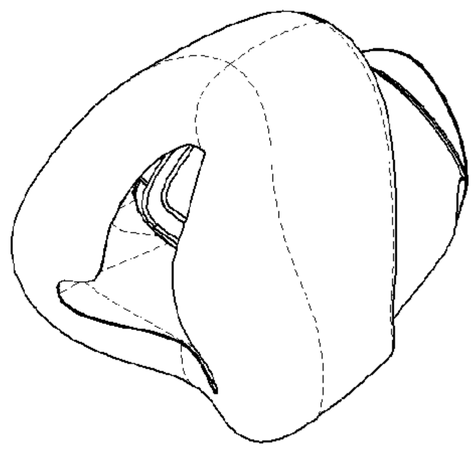

FIG. 17

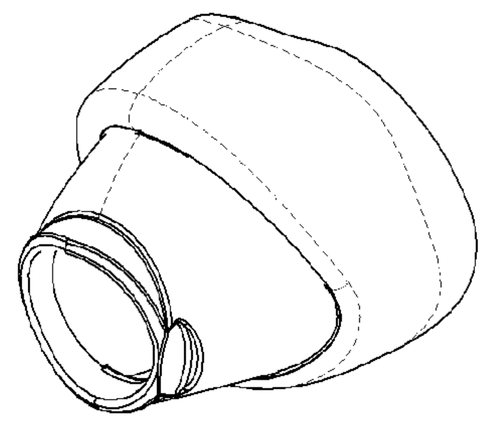

FIG. 18

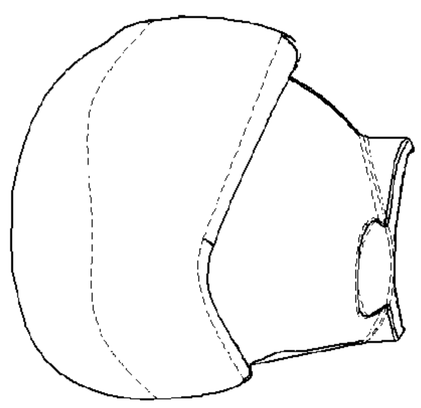

FIG. 19

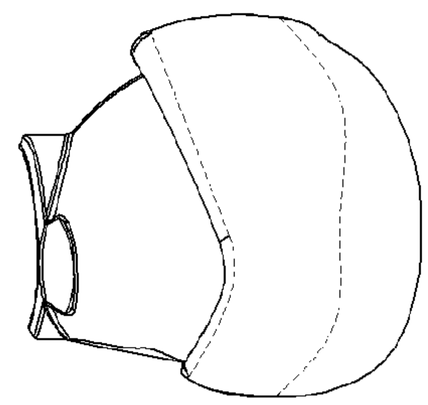

FIG. 20

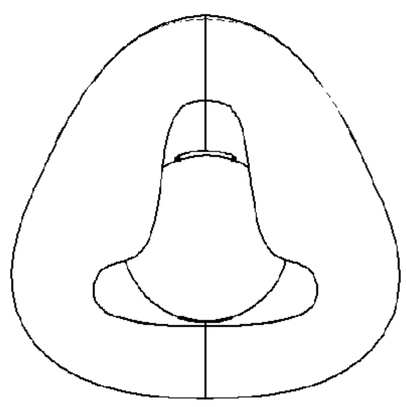

FIG. 21

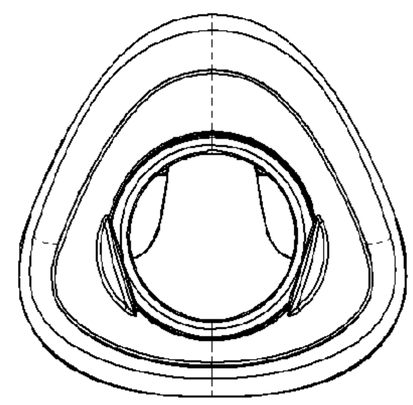

FIG. 22

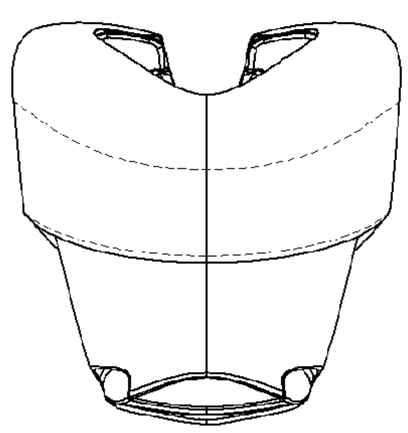

FIG. 23

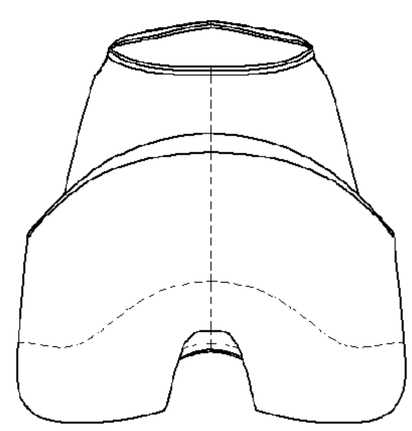

FIG. 24

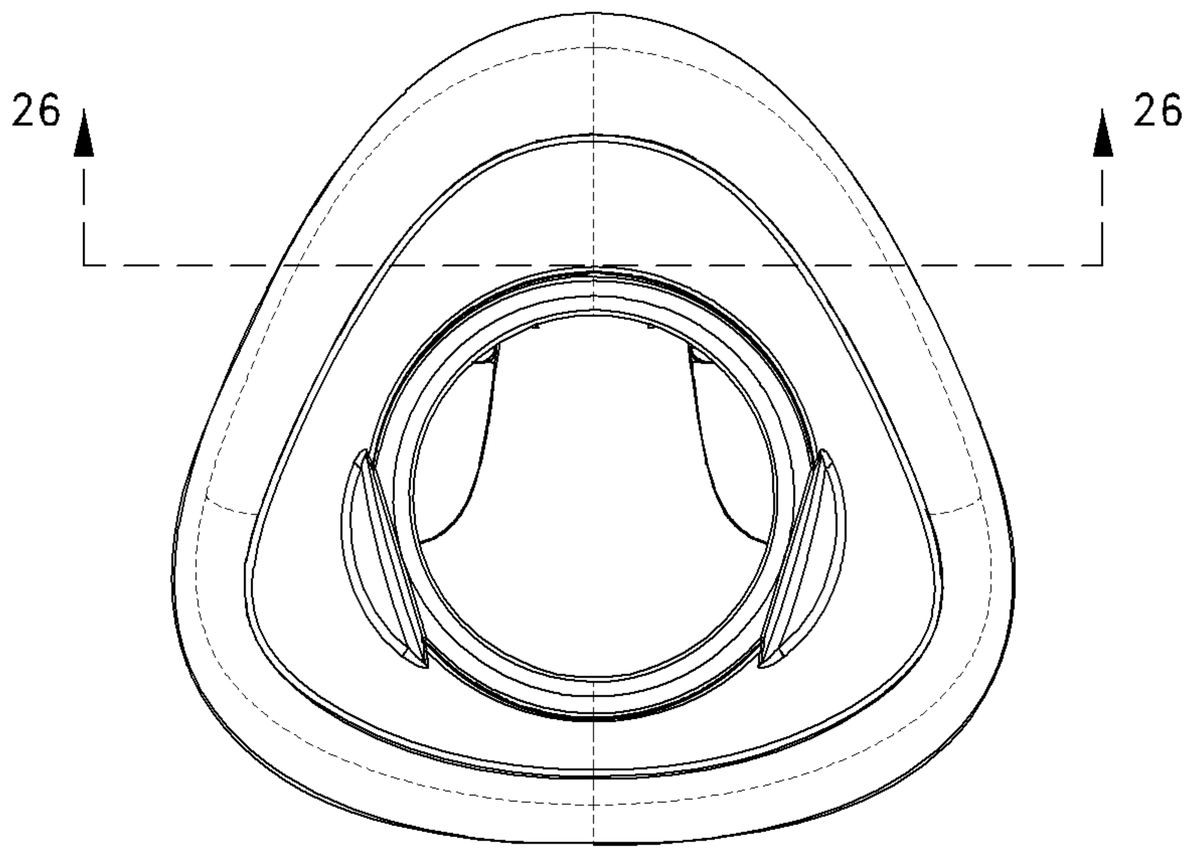


FIG. 25

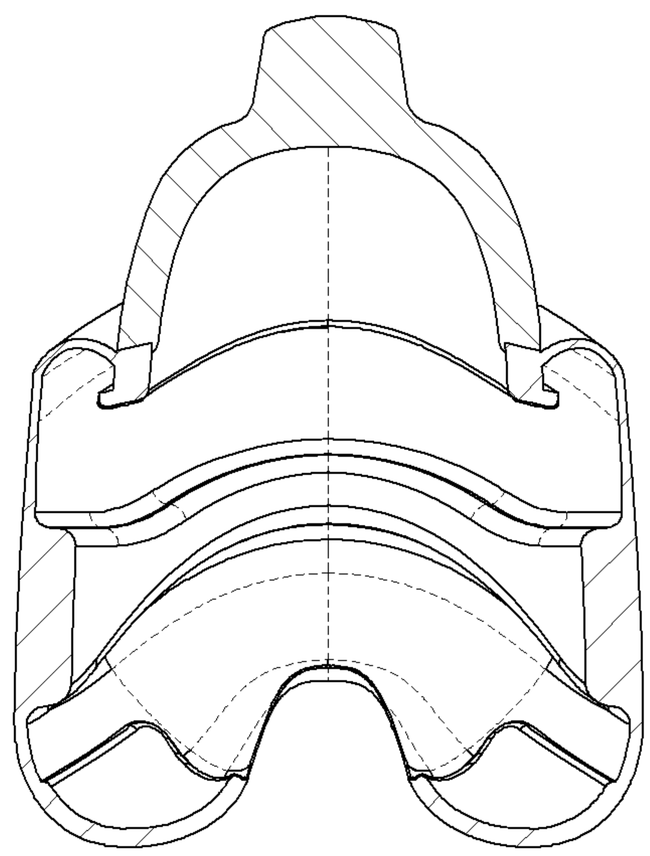

FIG. 26

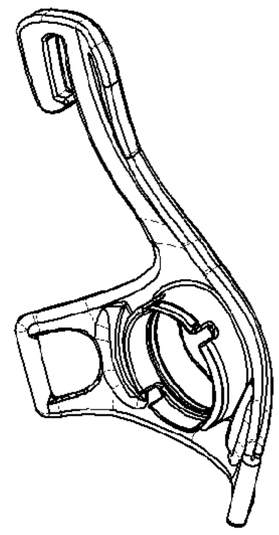

FIG. 27

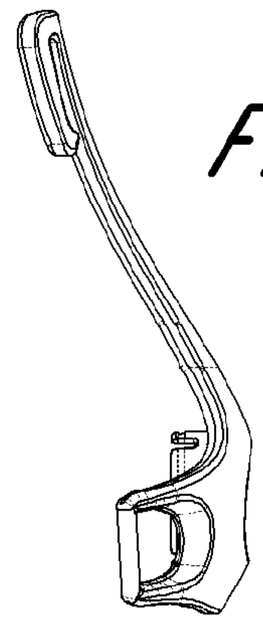

FIG. 28

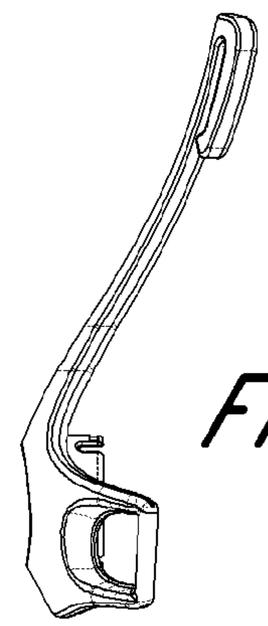

FIG. 29

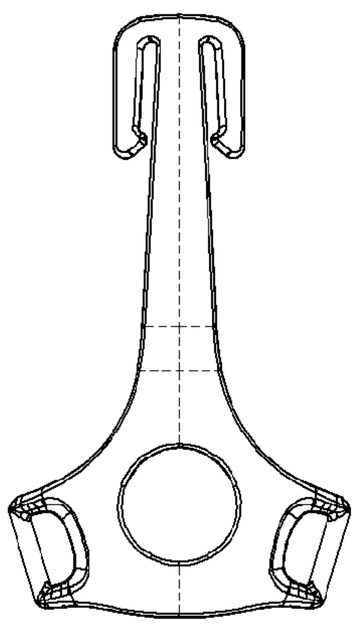

FIG. 30

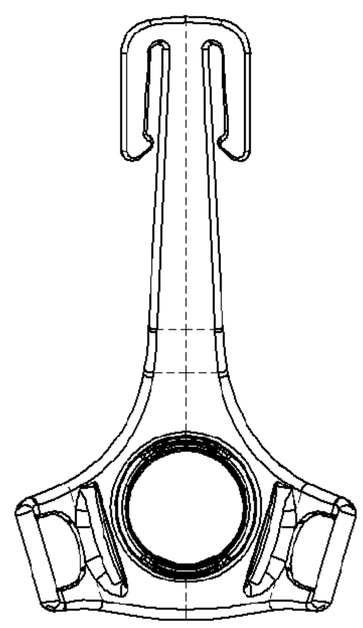

FIG. 31

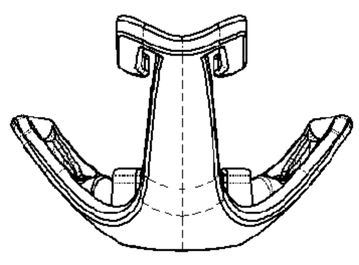

FIG. 32

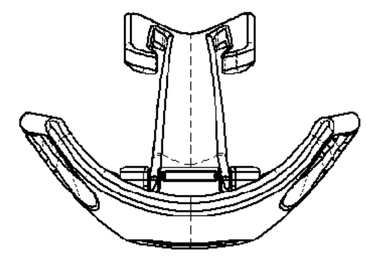

FIG. 33

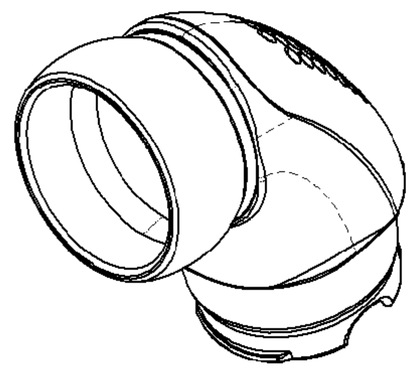

FIG. 34

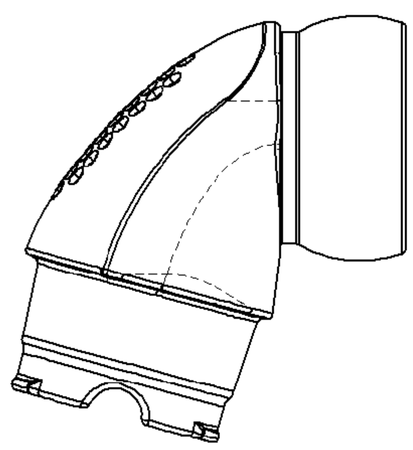

FIG. 35

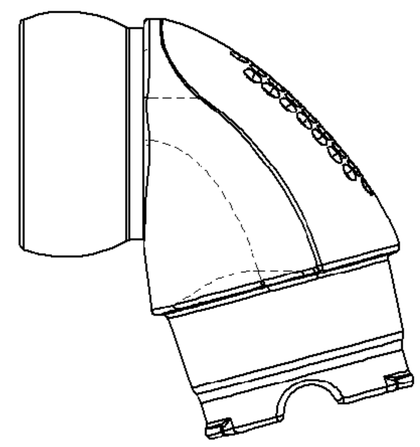

FIG. 36

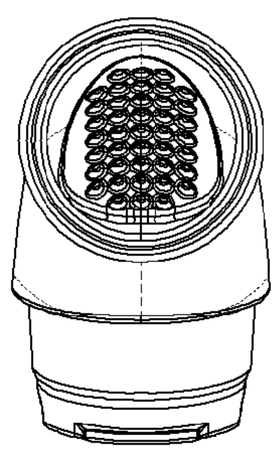

FIG. 37

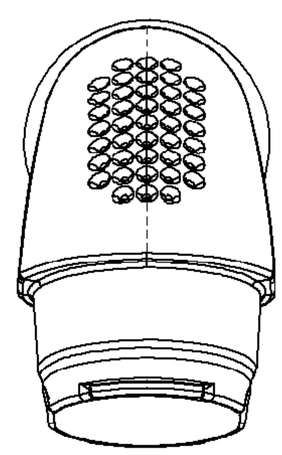

FIG. 38

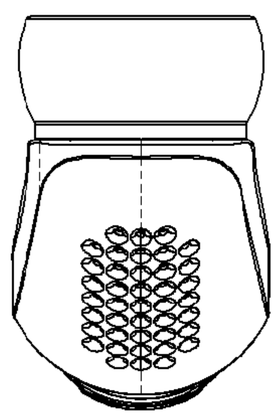

FIG. 39

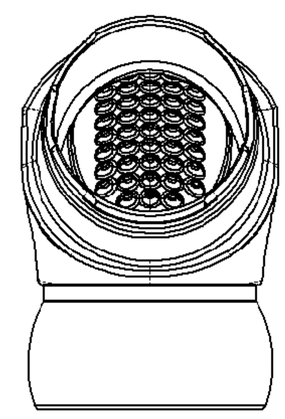

FIG. 40

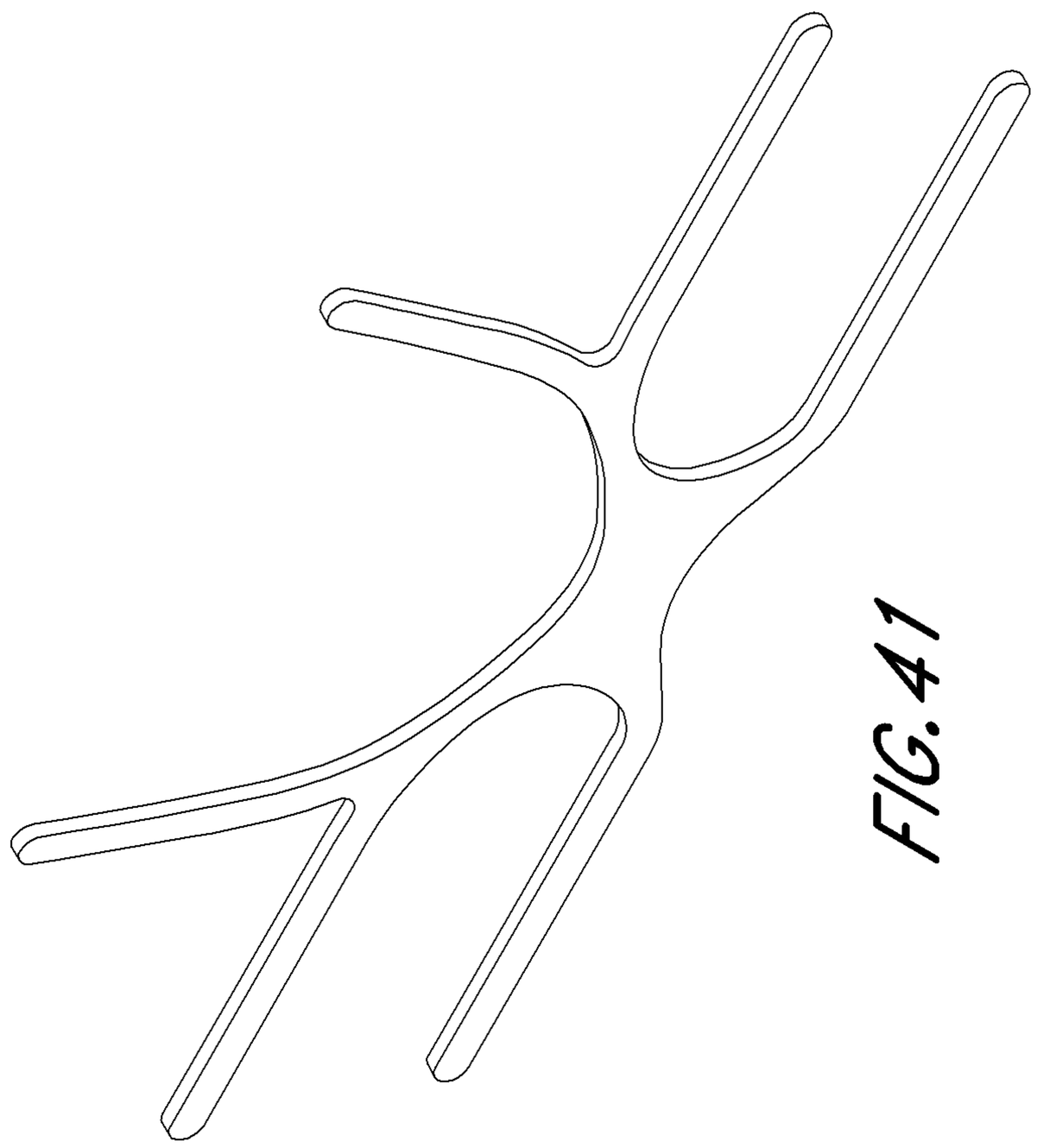

FIG. 41

FIG. 43

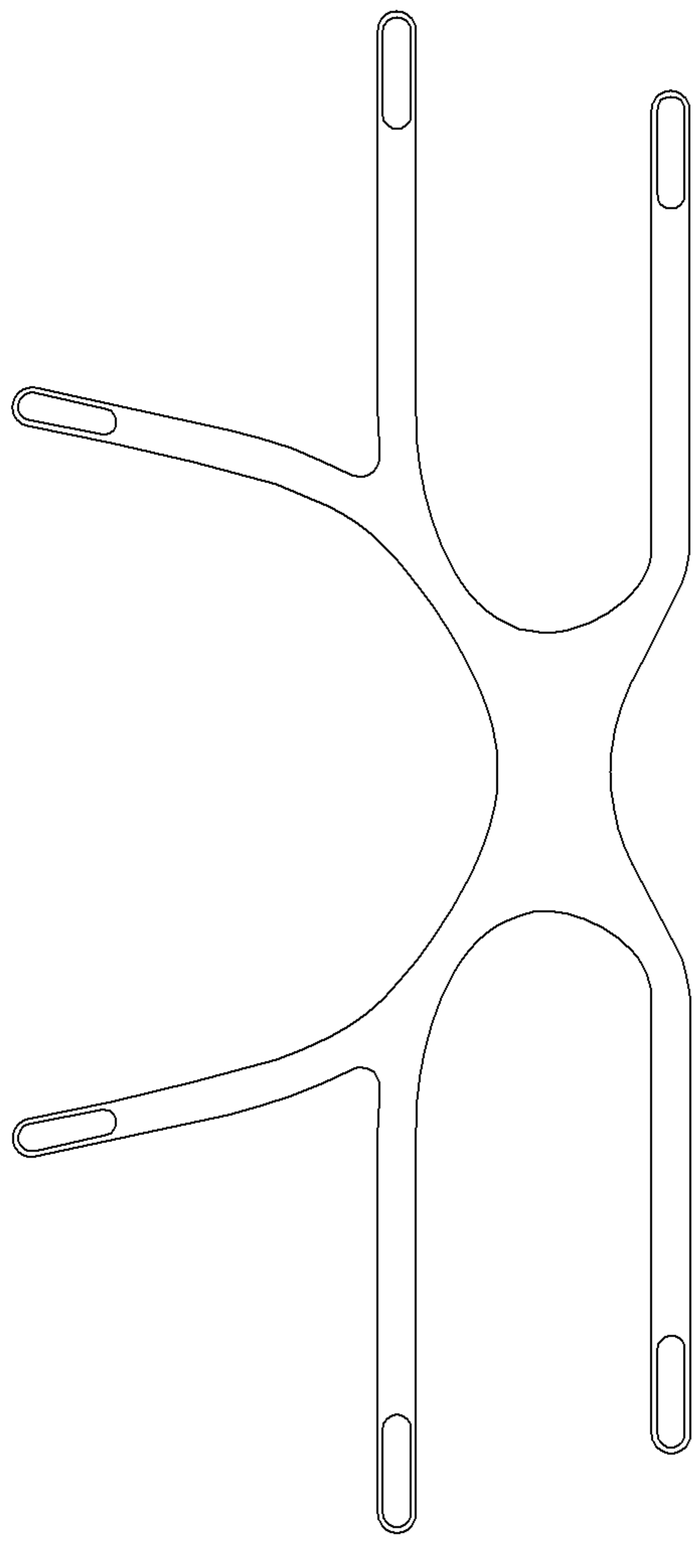

FIG. 42

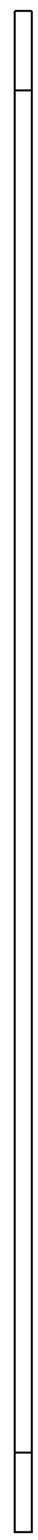

FIG. 44

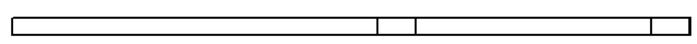

FIG. 45