US00D692174S

(12) United States Design Patent

Rashidi

(10) Patent No.: US D692,174 S
(45) Date of Patent: ** *Oct. 22, 2013

(54) **COMMERCIAL LED FIXTURE WITH MAIN REFLECTOR HAVING A SINGLE WALL WASH**

(76) Inventor: **Hamid Rashidi**, Commerce, CA (US)

(*) Notice: This patent is subject to a terminal disclaimer.

(**) Term: **14 Years**

(21) Appl. No.: **29/410,759**

(22) Filed: **Jan. 11, 2012**

(51) **LOC (9) Cl.** **26-05**

(52) **U.S. Cl.**
USPC **D26/74**

(58) **Field of Classification Search**
USPC D26/24, 72, 80, 81, 83, 85, 88, 89, 91, D26/113, 118, 123, 124, 138, 74, 76; 362/145, 146, 147, 148, 150, 153, 294, 362/296.01, 296.07, 296.08, 311.07, 362/311.09, 311.1, 345, 364, 365, 366, 373
See application file for complete search history.

(56) **References Cited**

U.S. PATENT DOCUMENTS

D490,181	S *	5/2004	Redfern	D26/72
D601,293	S *	9/2009	MacKenzie	D26/74
D656,262	S *	3/2012	Yoshinobu et al.	D26/74
8,220,970	B1 *	7/2012	Khazi et al.	362/294
8,240,871	B2 *	8/2012	Chou	362/148
D667,155	S *	9/2012	Rashidi	D26/74
D672,899	S *	12/2012	Van De Ven et al.	D26/74
8,348,477	B2 *	1/2013	Tickner et al.	362/365
2009/0129086	A1 *	5/2009	Thompson, III	362/249.02
2010/0259919	A1 *	10/2010	Khazi et al.	362/84
2011/0075411	A1 *	3/2011	Van De Ven et al.	362/235
2012/0140490	A1 *	6/2012	Rowlette et al.	362/373
2012/0212957	A1 *	8/2012	Hyun et al.	362/241

* cited by examiner

Primary Examiner — Angela J Lee
(74) *Attorney, Agent, or Firm* — Thomas I. Rozsa

(57) **CLAIM**

The ornamental design for a commercial LED fixture with main reflector having a single wall wash, as shown and described.

DESCRIPTION

FIG. **1** is a side perspective view of a first embodiment of the commercial LED fixture with main reflector having a single wall wash;
FIG. **2** is a bottom perspective view thereof;
FIG. **3** is a left side elevational view thereof;
FIG. **4** is a right side elevational view thereof;
FIG. **5** is a front elevational view thereof;
FIG. **6** is a rear elevational view thereof;
FIG. **7** is a top plan view thereof;
FIG. **8** is bottom plan view thereof;
FIG. **9** is an exploded view thereof;
FIG. **10** is a side perspective view of a second embodiment of the commercial LED fixture with main reflector having a single wall wash;
FIG. **11** is a bottom perspective view thereof;
FIG. **12** is a left side elevational view thereof;
FIG. **13** is a right side elevational view thereof;
FIG. **14** is a front elevational view thereof;
FIG. **15** is a rear elevational view thereof;
FIG. **16** is a top plan view thereof;
FIG. **17** is bottom plan view thereof; and,
FIG. **18** is an exploded view thereof.

1 Claim, 18 Drawing Sheets

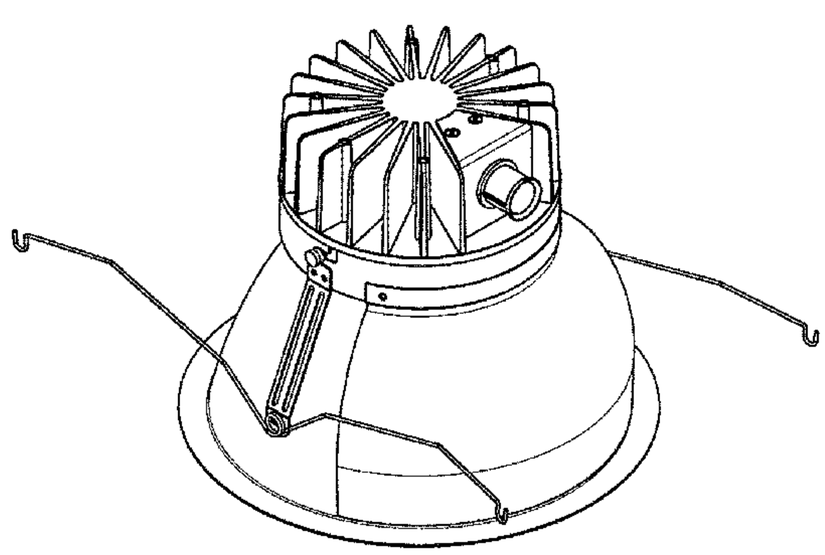

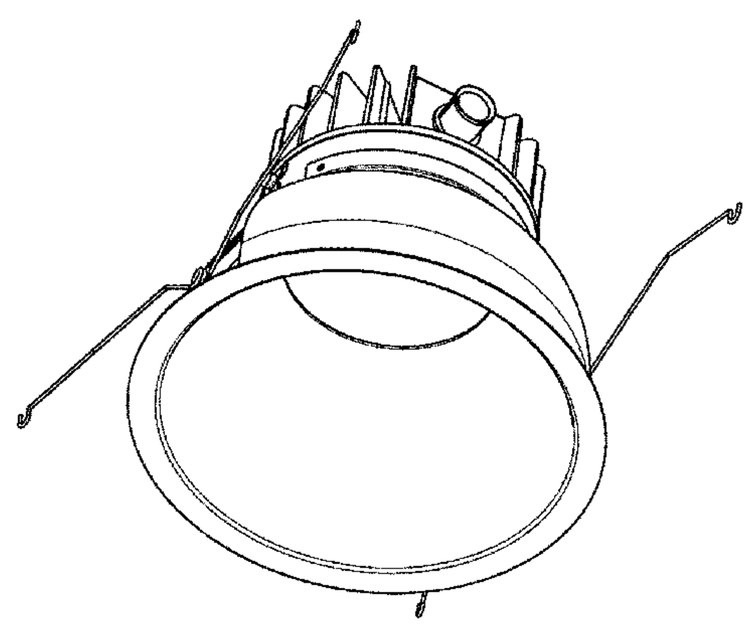

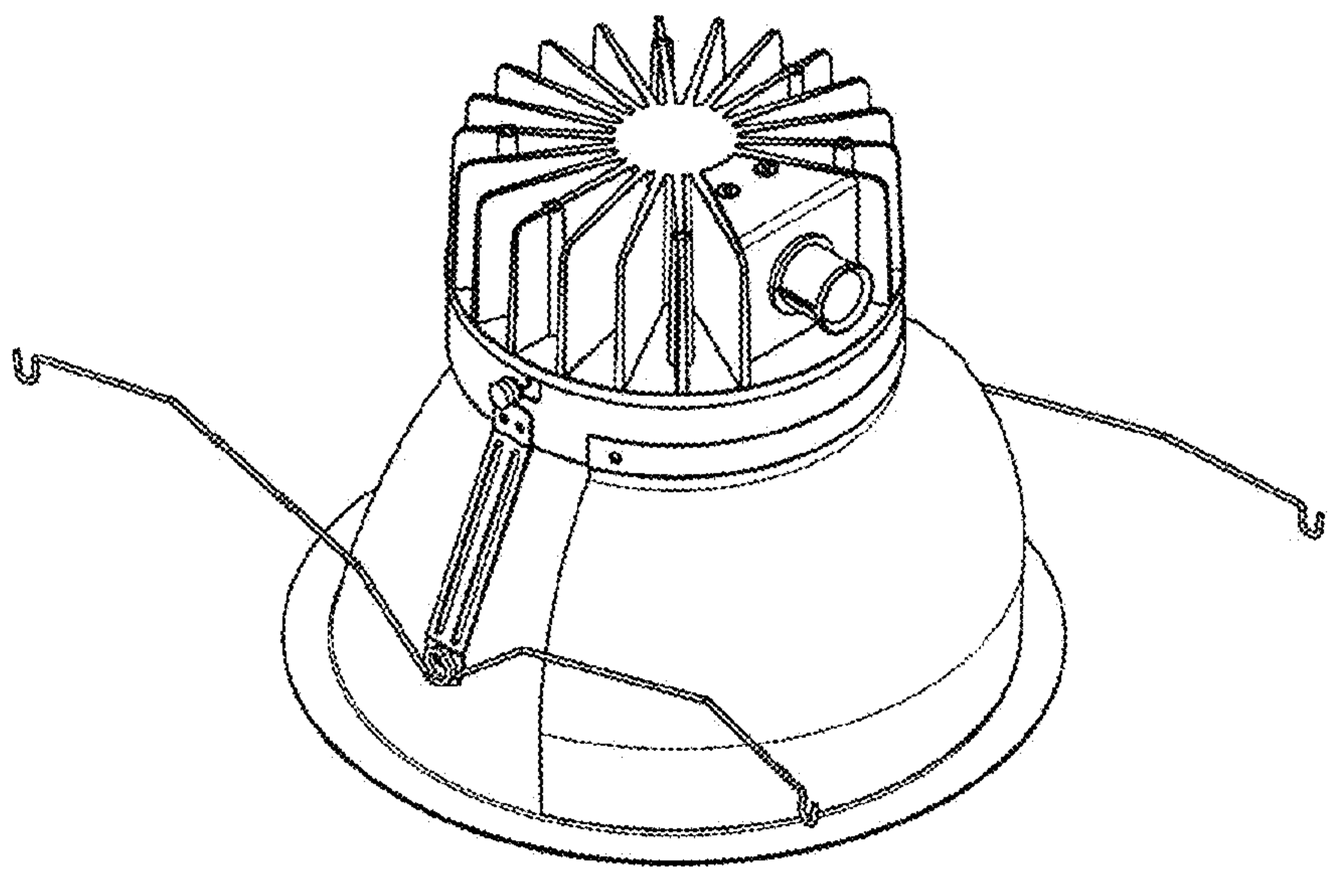

FIG.1

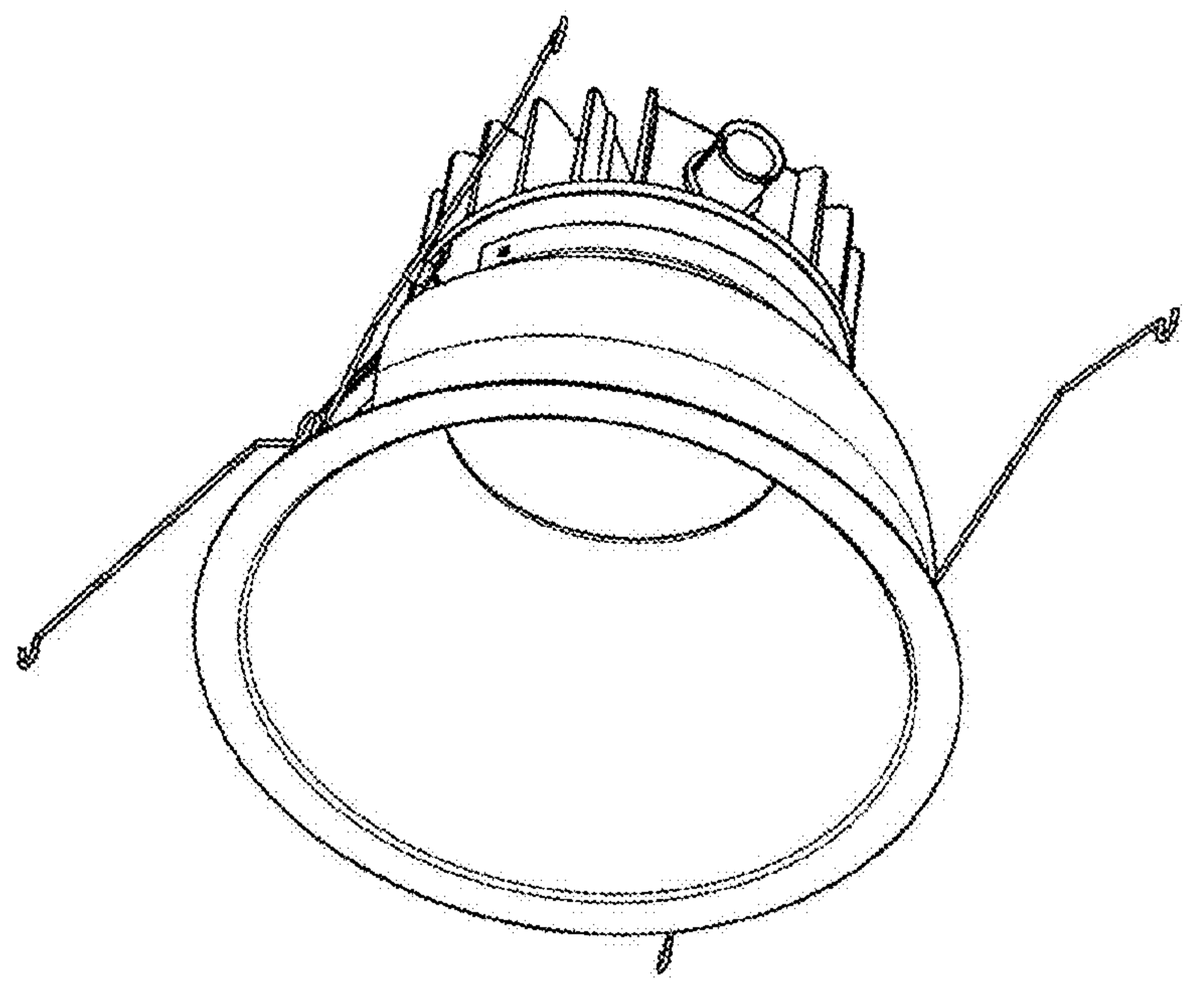

FIG.2

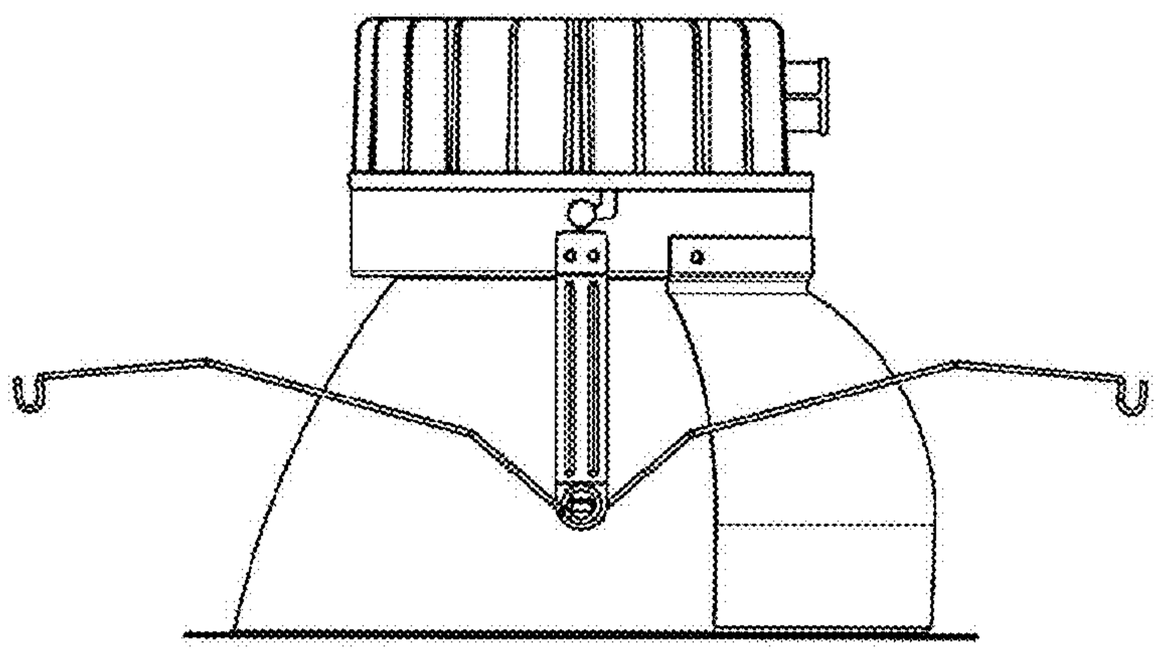

FIG.3

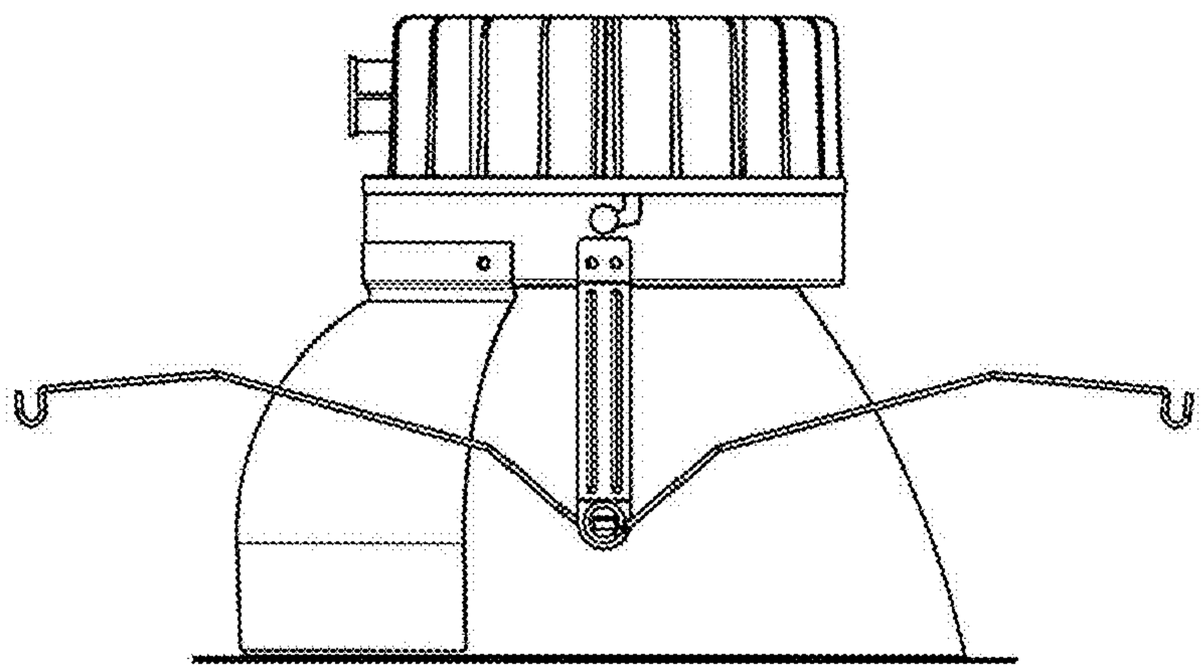

FIG.4

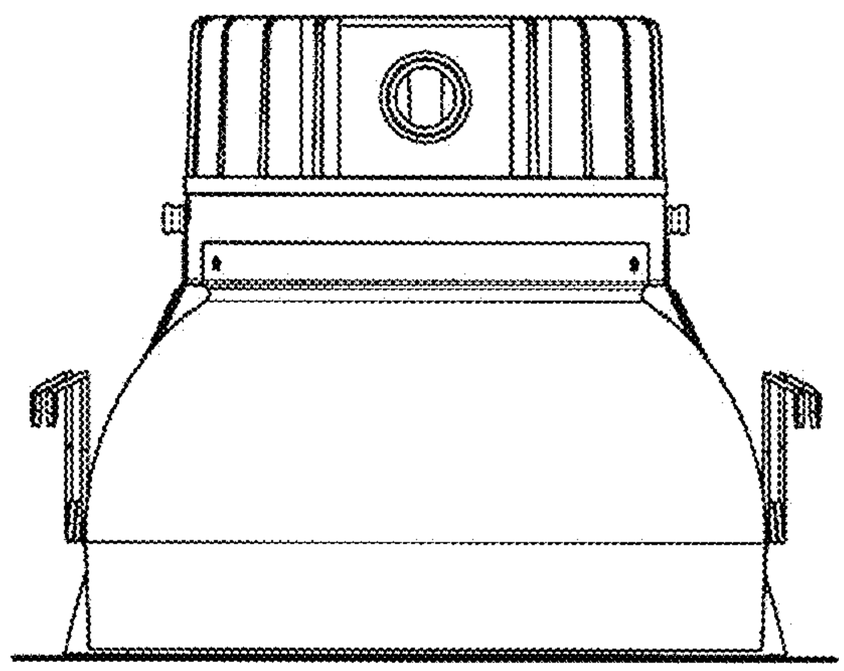

FIG.5

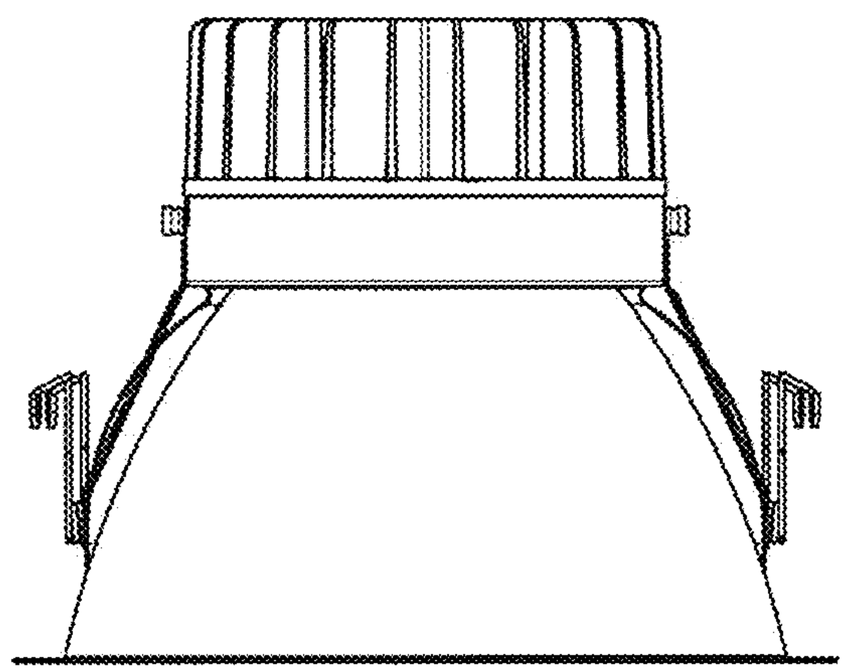

FIG.6

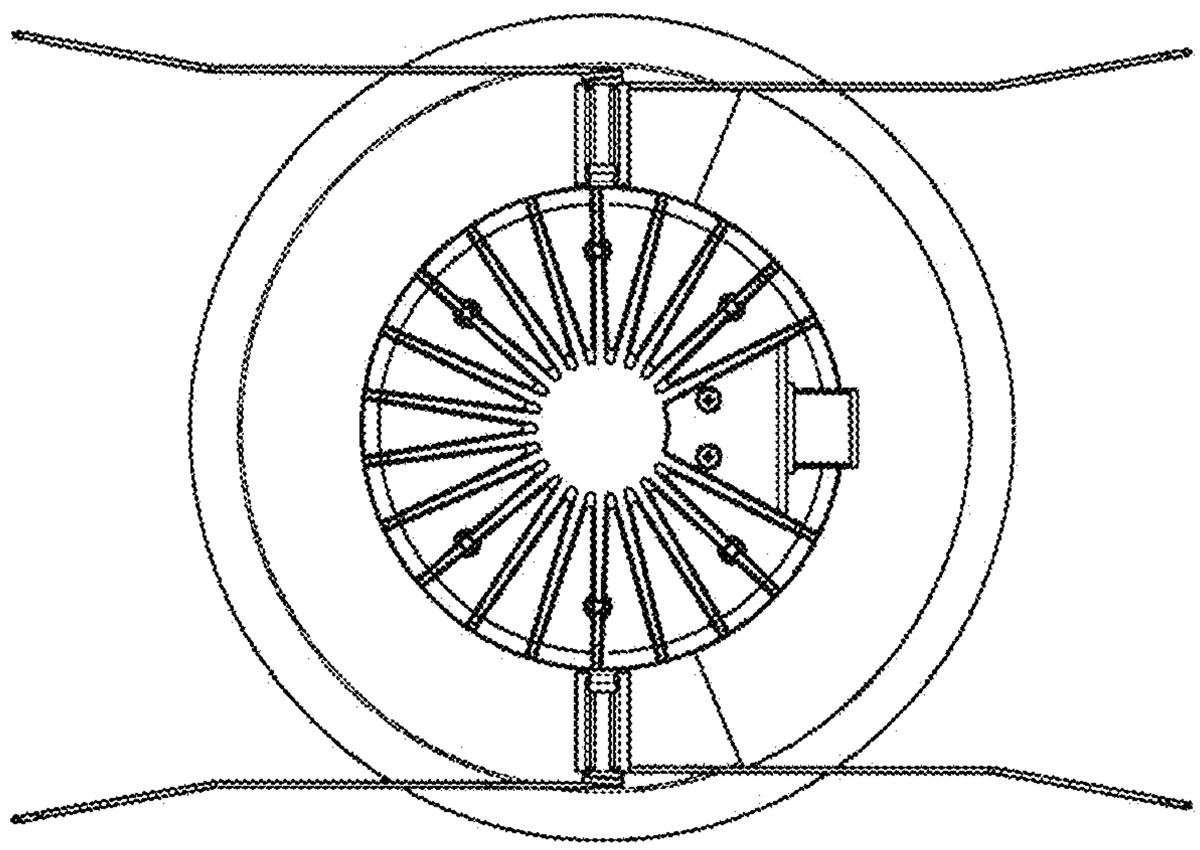

FIG.7

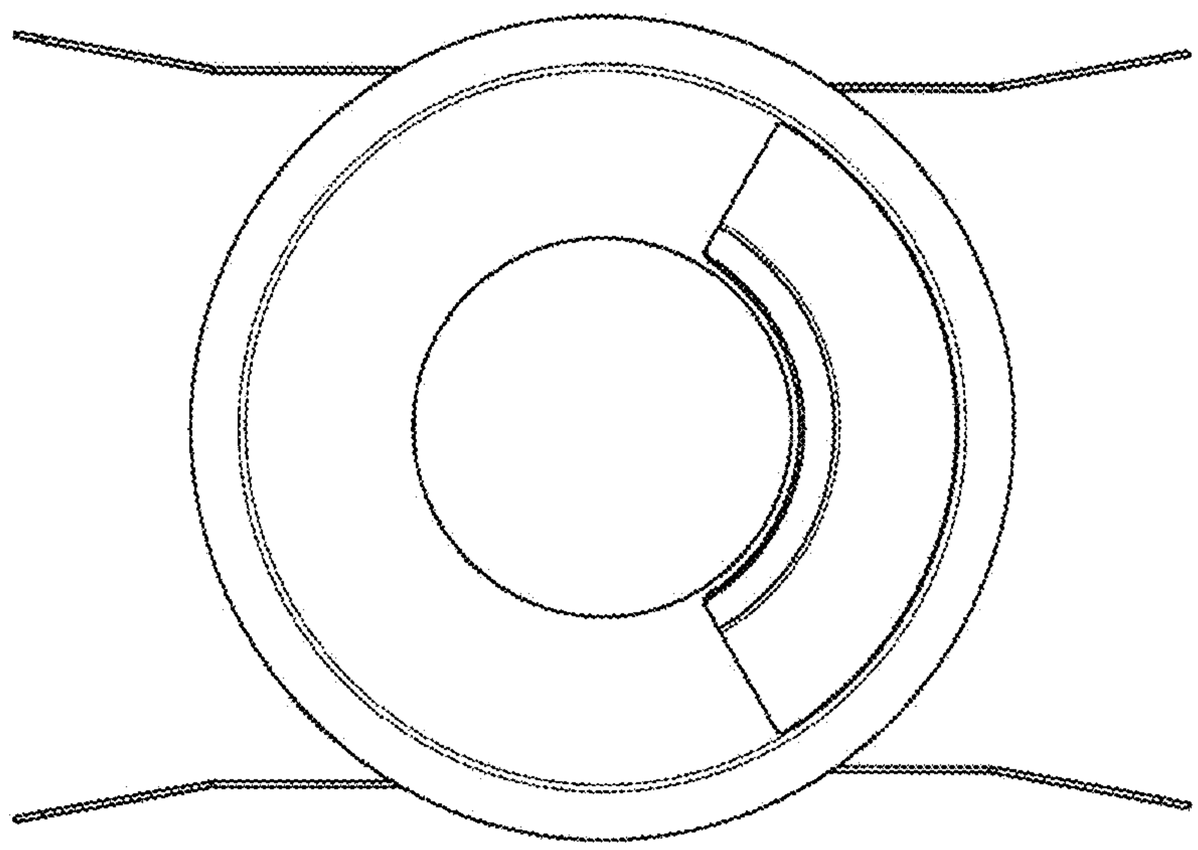

FIG. 8

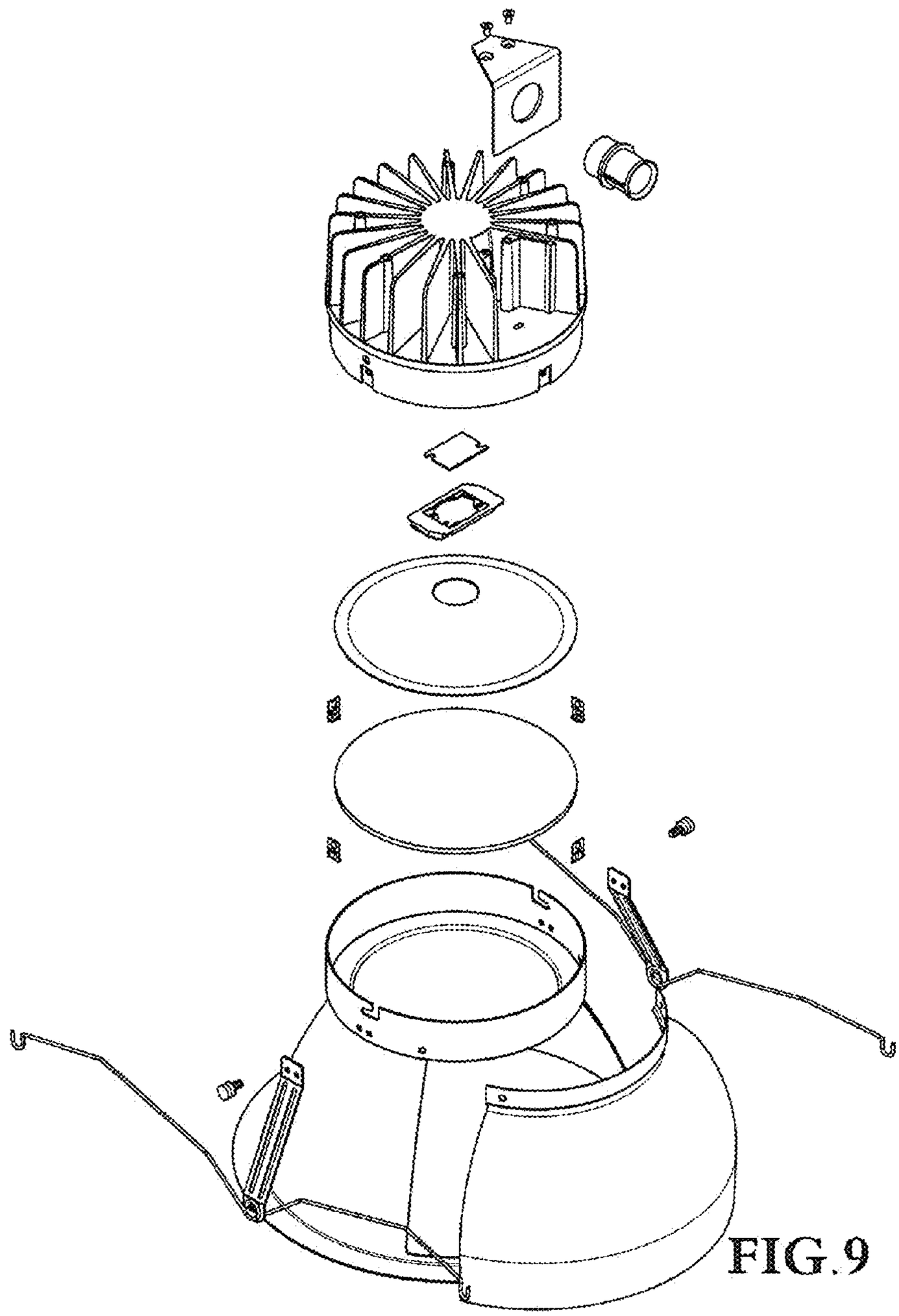

FIG.9

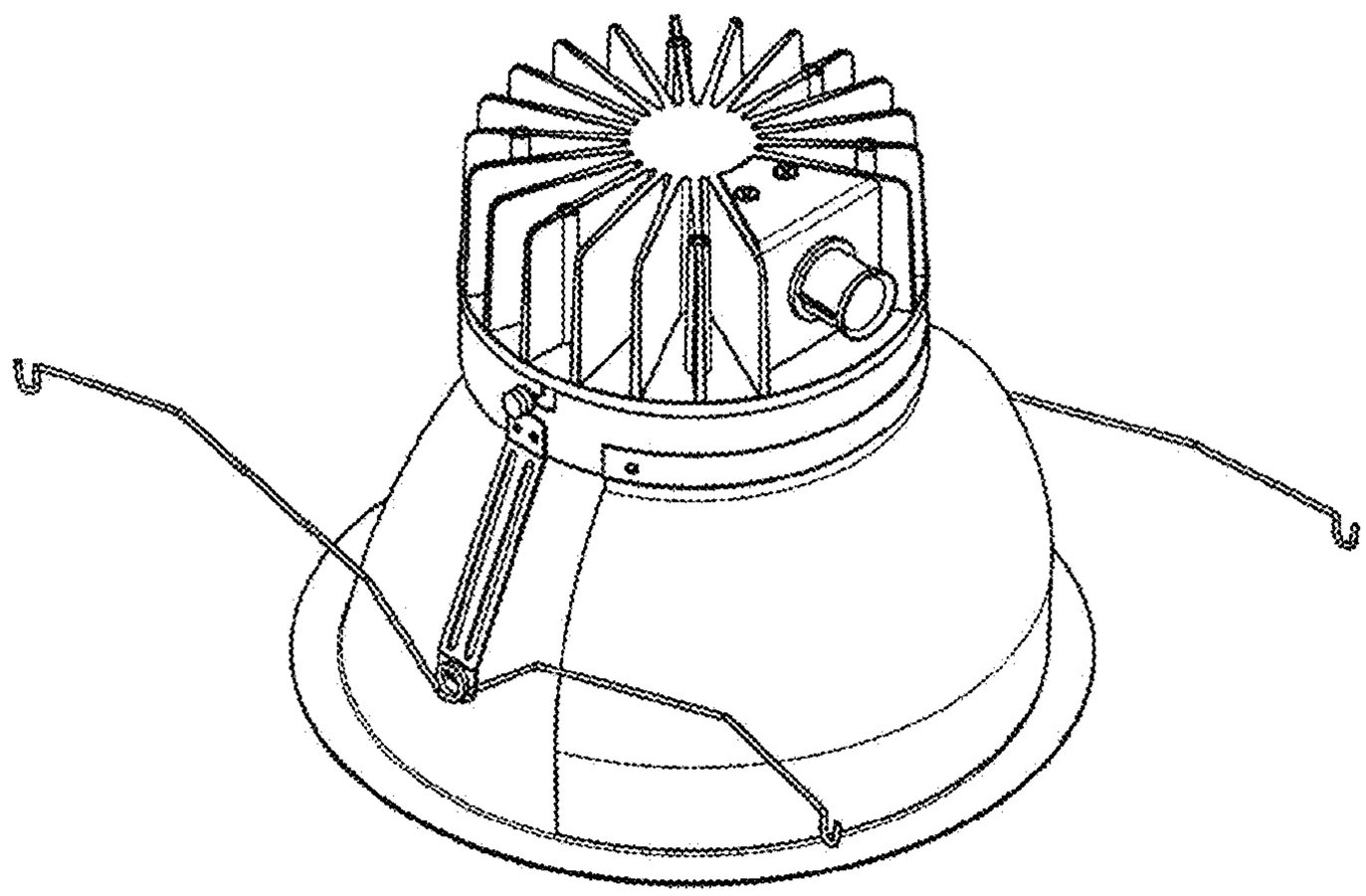

FIG.10

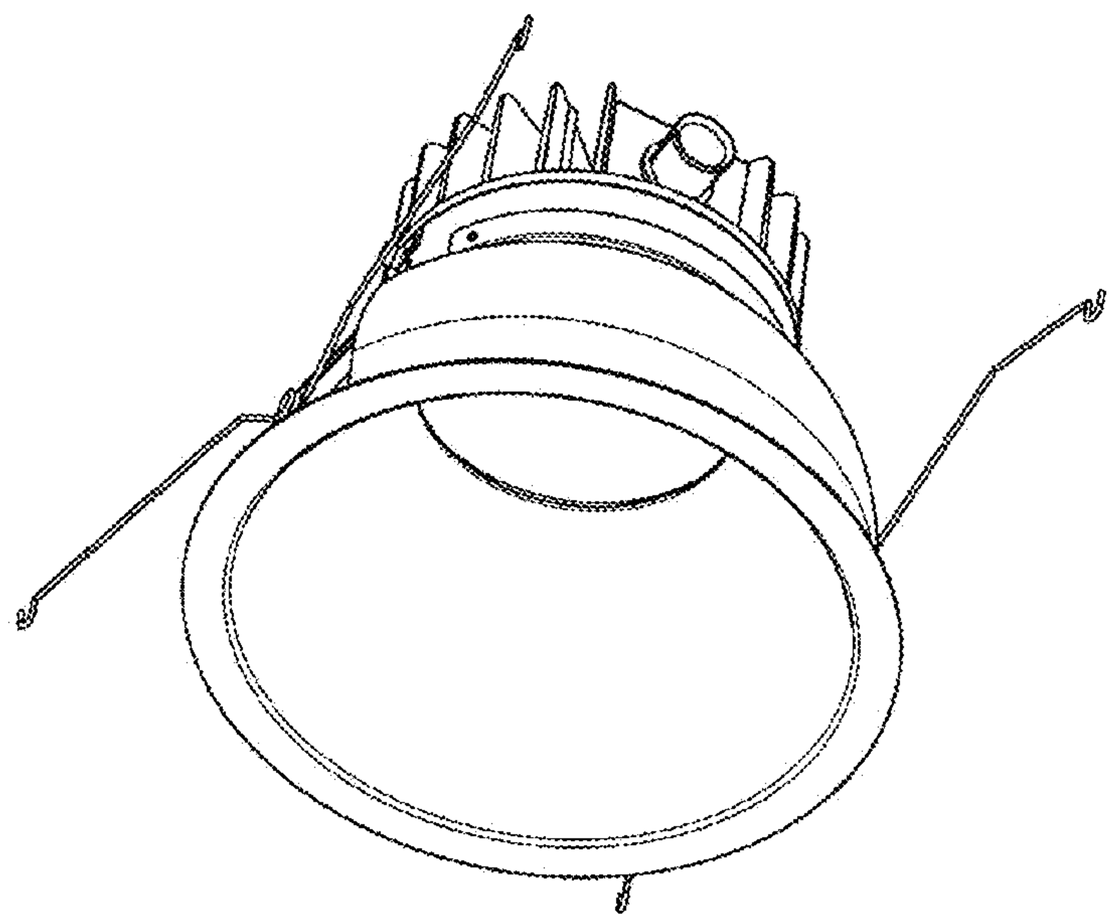

FIG.11

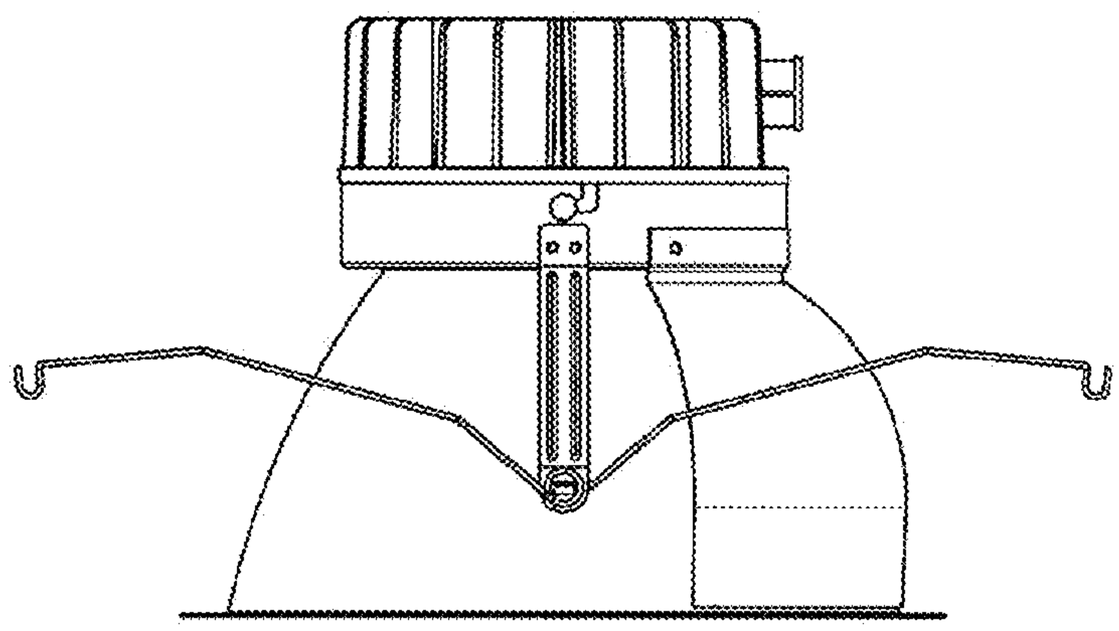

FIG.12

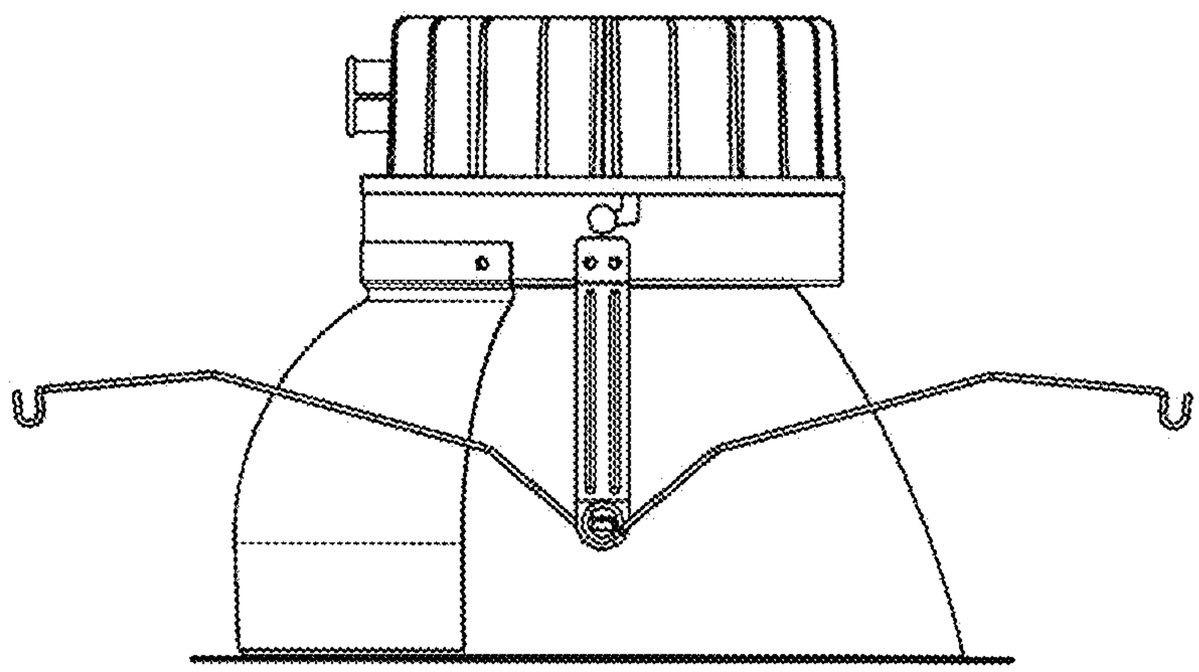

FIG.13

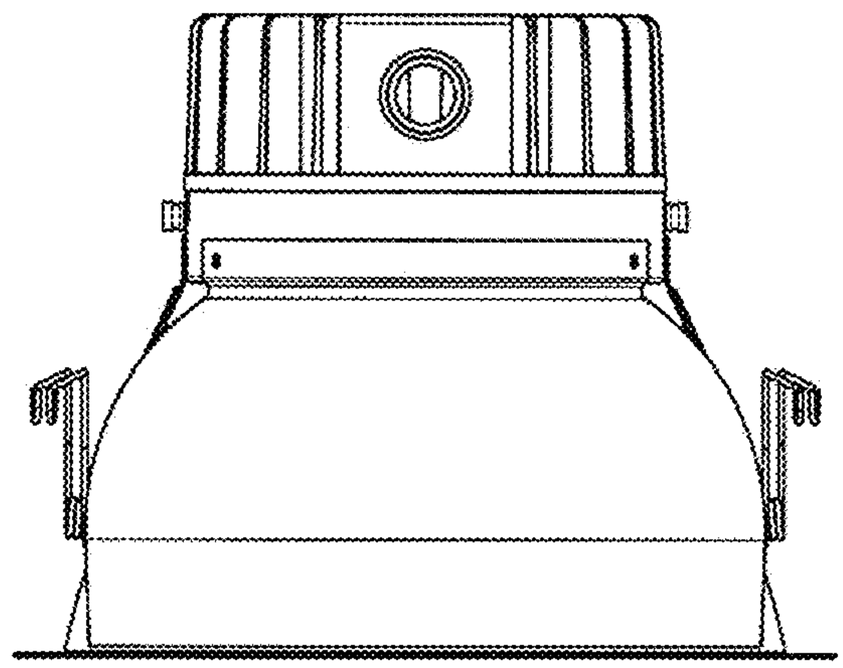

FIG.14

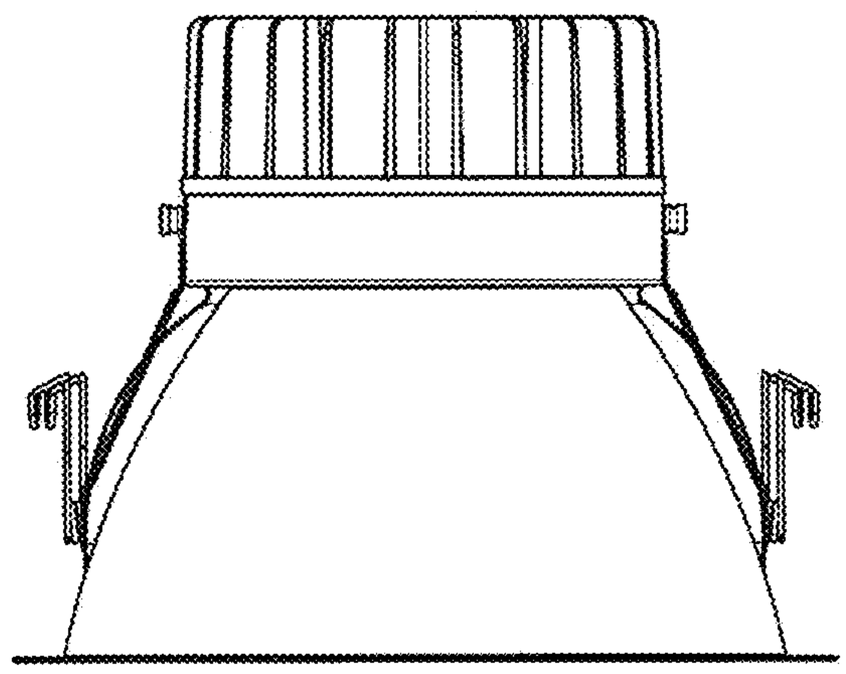

FIG.15

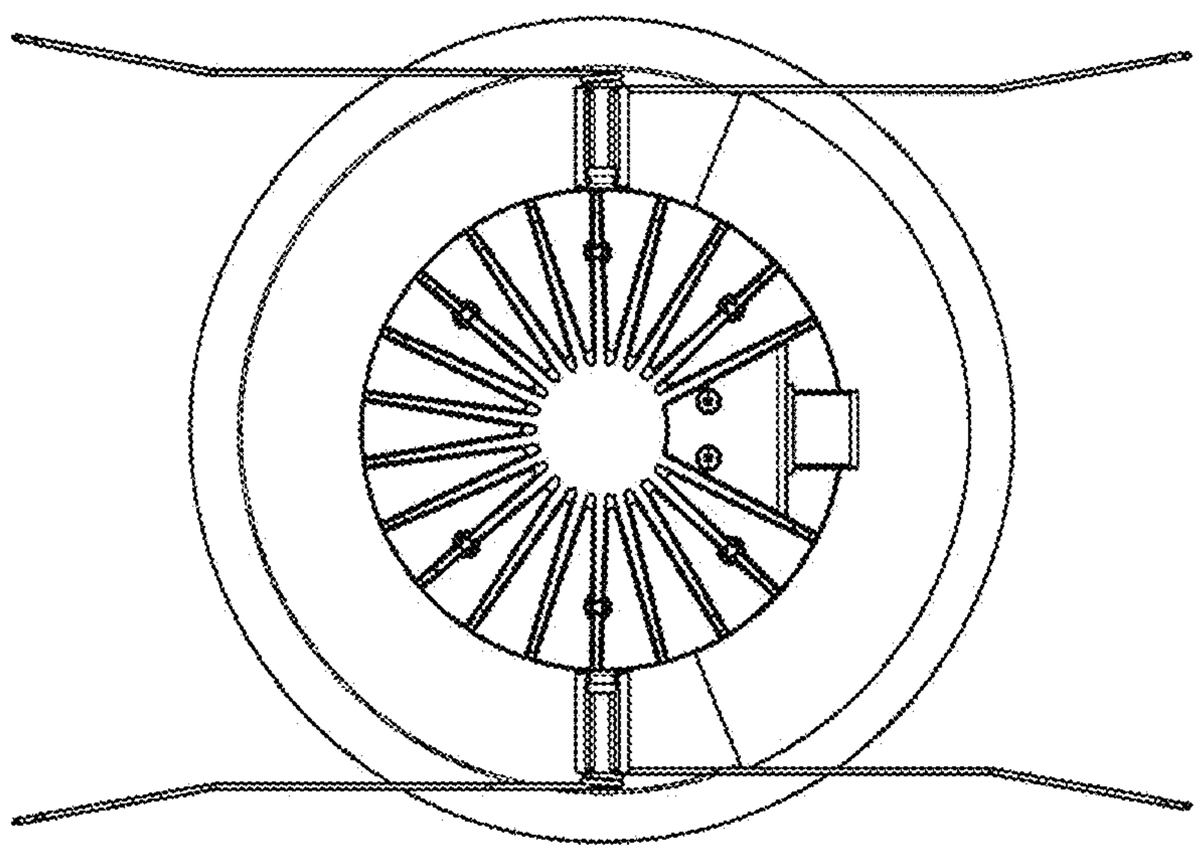

FIG.16

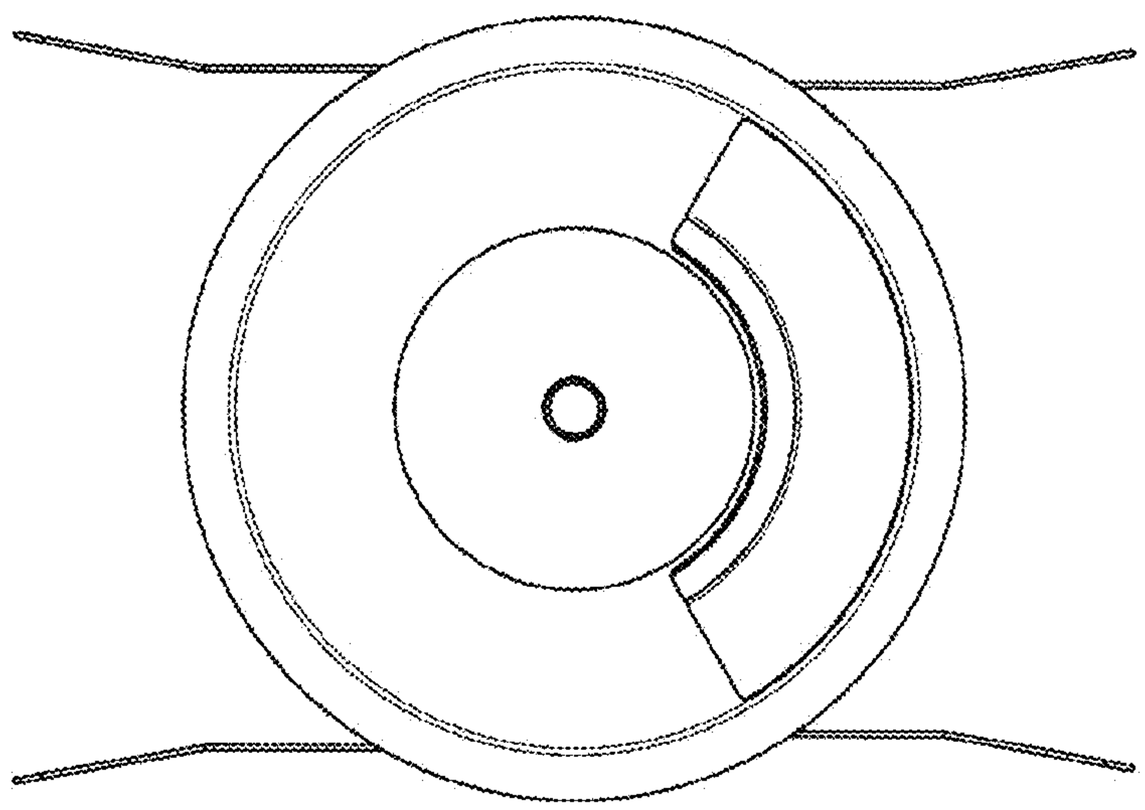

FIG.17

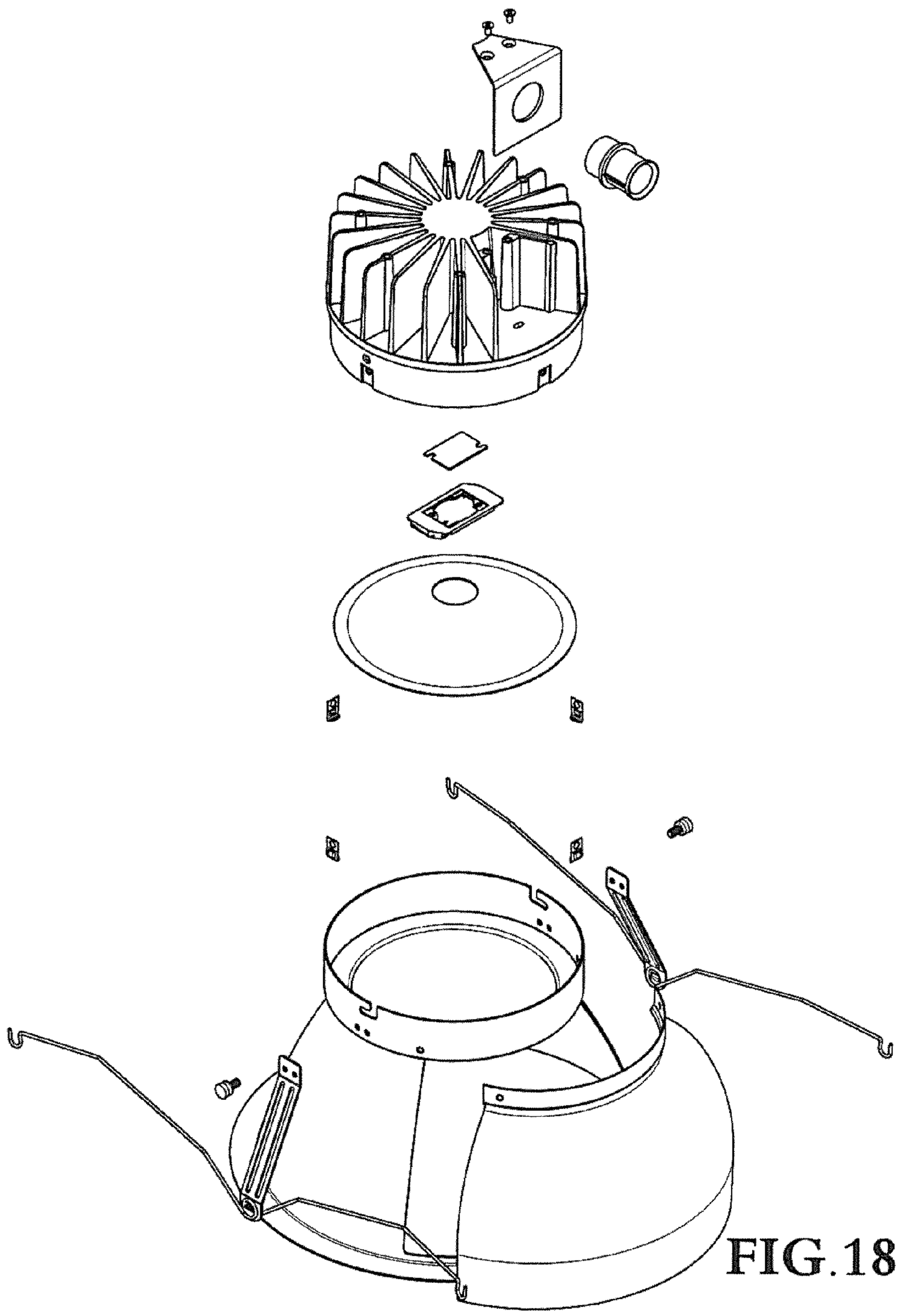

FIG.18