US00D691613S

(12) United States Design Patent

Wenz et al.

(10) Patent No.: US D691,613 S
(45) Date of Patent: ** Oct. 15, 2013

(54) **DISPLAY SCREEN WITH A GRAPHICAL INTERFACE**

(75) Inventors: **Oliver C. Wenz**, Petaluma, CA (US); **Michael J. Manning**, Campbell, CA (US); **Ji hyun Kim**, Alameda, CA (US)

(73) Assignee: **Cisco Technology, Inc.**, San Jose, CA (US)

(**) Term: **14 Years**

(21) Appl. No.: **29/380,008**

(22) Filed: **Nov. 29, 2010**

(51) **LOC (9) Cl.** **14-04**

(52) **U.S. Cl.**
USPC **D14/485**

(58) **Field of Classification Search**
USPC D14/485–488, 495; D18/31–33; D20/10, 11, 22, 23, 25, 27, 32; 715/751–753, 756, 758, 759
See application file for complete search history.

(56) **References Cited**

U.S. PATENT DOCUMENTS

D2,945	S	*	3/1868	Parker et al.	D20/23
5,617,539	A	*	4/1997	Ludwig et al.	709/205
D437,858	S	*	2/2001	Yasui et al.	D14/486
D439,585	S	*	3/2001	Law et al.	D14/487
D458,611	S	*	6/2002	Gallo	D14/485
D470,153	S	*	2/2003	Billmaier et al.	D14/486
6,819,344	B2	*	11/2004	Robbins	715/848
D500,788	S	*	1/2005	Kaplan	D19/8
D506,472	S	*	6/2005	Tyner et al.	D14/486
7,124,164	B1	*	10/2006	Chemtob	709/204
7,243,299	B1	*	7/2007	Rubin et al.	715/209
D548,743	S	*	8/2007	Takahashi et al.	D14/486
D549,713	S	*	8/2007	Lewin et al.	D14/485
D561,197	S	*	2/2008	Okaro et al.	D14/495
D563,968	S	*	3/2008	Lewin et al.	D14/485
D566,775	S	*	4/2008	Delmotte et al.	D20/27
7,360,172	B2	*	4/2008	Grossman et al.	715/839
D568,329	S	*	5/2008	Park et al.	D14/486

(Continued)

OTHER PUBLICATIONS

Design U.S. Appl. No. 29/380,005, filed Nov. 29, 2010, entitled "Interface Element," Inventor(s): Oliver C. Wenz et al.

(Continued)

Primary Examiner — Karen E Kearney

(57) **CLAIM**

The ornamental design for a display screen with a graphical interface, as shown and described.

DESCRIPTION

FIG. **1** is a perspective view illustrating a display screen with a graphical interface according to one embodiment;
FIG. **2** is a front view thereof;
FIG. **3** is a perspective view thereof, shown in a different placement in the environment;
FIG. **4** is a front view thereof;
FIG. **5** is a perspective view thereof, shown in a different placement in the environment;
FIG. **6** is a front view thereof;
FIG. **7** is a perspective view illustrating a display screen with a graphical interface according to a second embodiment;
FIG. **8** is a front view thereof;
FIG. **9** is a perspective view of the embodiment of FIG. **7**, shown in a different placement in the environment;
FIG. **10** is a front view thereof;
FIG. **11** is a perspective view of the embodiment of FIG. **7**, shown in a different placement in the environment; and,
FIG. **12** is a front view thereof.
The broken line showings of the display screen in all of the figures and of the rectangle in FIGS. **1-6** are included for the purpose of illustrating environmental structure and portions of the display screen with a graphical interface. The broken lines form no part of the claimed design.

1 Claim, 12 Drawing Sheets

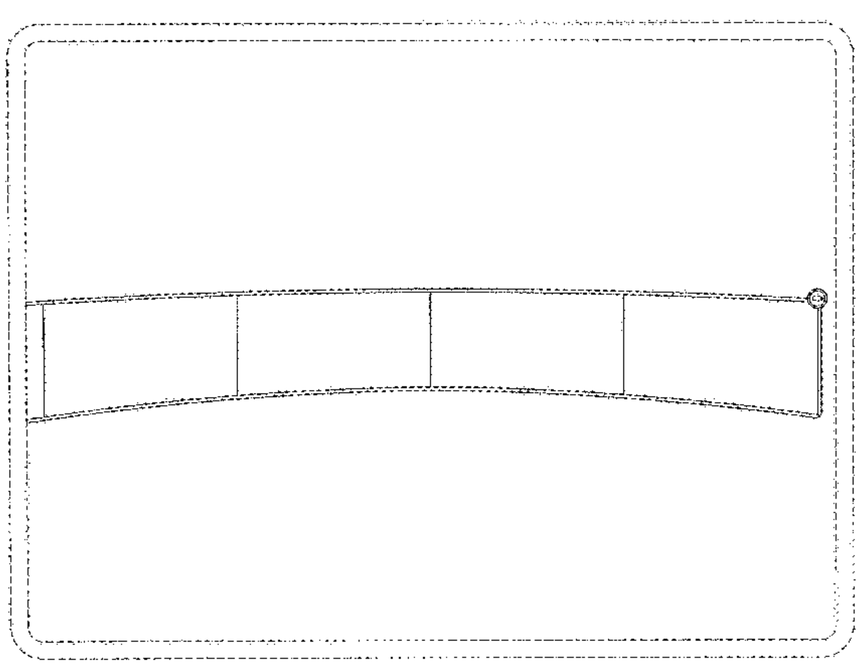

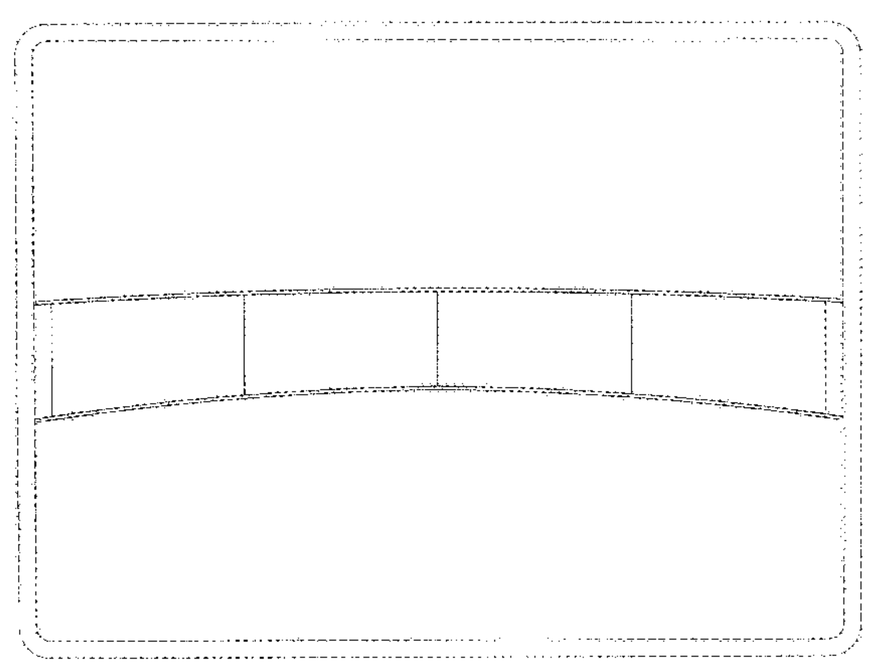

(56) **References Cited**

U.S. PATENT DOCUMENTS

7,464,137	B2 *	12/2008	Zhu et al.	709/204
D586,359	S *	2/2009	Makoski et al.	D14/486
D593,571	S *	6/2009	Ball et al.	D14/485
D600,249	S *	9/2009	Nagata et al.	D14/486
D601,582	S *	10/2009	Chaudhri et al.	D14/495
D603,420	S *	11/2009	Channell	D14/487
D604,742	S *	11/2009	Nagata et al.	D14/486
D605,199	S *	12/2009	Nagata et al.	D14/486
D609,714	S *	2/2010	Oda et al.	D14/485
7,689,650	B1 *	3/2010	Sanghavi et al.	709/204
D624,930	S *	10/2010	Agnetta et al.	D14/487
D631,886	S *	2/2011	Vance et al.	D14/486
D638,432	S *	5/2011	Flik et al.	D14/486
D642,586	S *	8/2011	Jones et al.	D14/485
D648,741	S *	11/2011	Lemay	D14/493
D653,259	S *	1/2012	Vance et al.	D14/486
2001/0028369	A1 *	10/2001	Gallo et al.	345/848
2002/0097277	A1 *	7/2002	Pitroda	345/854
2003/0061285	A1 *	3/2003	Usui et al.	709/205
2003/0231208	A1 *	12/2003	Hanon et al.	345/764
2004/0064510	A1 *	4/2004	Ooi et al.	709/205
2005/0166154	A1 *	7/2005	Wilson et al.	715/751
2005/0262542	A1 *	11/2005	DeWeese et al.	725/106
2007/0192728	A1 *	8/2007	Finley et al.	715/782
2007/0300164	A1 *	12/2007	Bhogal et al.	715/753
2008/0215992	A1 *	9/2008	Or	715/753
2008/0244419	A1 *	10/2008	Kurpick et al.	715/756
2009/0157709	A1 *	6/2009	Kruger et al.	707/100
2009/0177975	A1 *	7/2009	Elgar et al.	715/751
2009/0235184	A1 *	9/2009	Perlson et al.	715/758
2010/0073454	A1 *	3/2010	Lovhaugen et al.	348/14.03
2010/0122183	A1 *	5/2010	Babaian et al.	715/752
2011/0035687	A1 *	2/2011	Katis et al.	715/758
2011/0320044	A1 *	12/2011	Smith et al.	700/276

OTHER PUBLICATIONS

Design U.S. Appl. No. 29/380,007, filed Nov. 29, 2010, entitled "Interface Element," Inventor(s): Oliver C. Wenz et al.

Design U.S. Appl. No. 29/380,011, filed Nov. 29, 2010, entitled "Interface Element," Inventor(s): Oliver C. Wenz et al.

Design U.S. Appl. No. 29/380,012, filed Nov. 29, 2010, entitled "Interface Element," Inventor(s): Oliver C. Wenz et al.

Design U.S. Appl. No. 29/380,014, filed Nov. 29, 2010, entitled "Interface Element," Inventor(s): Oliver C. Wenz et al.

Design U.S. Appl. No. 29/380,017, filed Nov. 29, 2010, entitled "Interface Element," Inventor(s): Oliver C. Wenz et al.

Design U.S. Appl. No. 29/380,018, filed Nov. 29, 2010, entitled "Interface Element," Inventor(s): Oliver C. Wenz et al.

Design U.S. Appl. No. 29/380,019, filed Nov. 29, 2010, entitled "Interface Element," Inventor(s): Oliver C. Wenz et al.

Design U.S. Appl. No. 29/380,021, filed Nov. 29, 2010, entitled "Interface Element," Inventor(s): Oliver C. Wenz et al.

Design U.S. Appl. No. 29/380,022, filed Nov. 29, 2010, entitled "Interface Element," Inventor(s): Oliver C. Wenz et al.

Design U.S. Appl. No. 29/380,023, filed Nov. 29, 2010, entitled "Interface Element," Inventor(s): Oliver C. Wenz et al.

Vizard, Mike, "Intel CEO Demos Video Conferencing on a Smartphone," CTO Edge, Jan. 8, 2010; 2 pages; http://www.ctoedge.com/content/intel-ceo-demos-video-conferencing-smartphone.

* cited by examiner

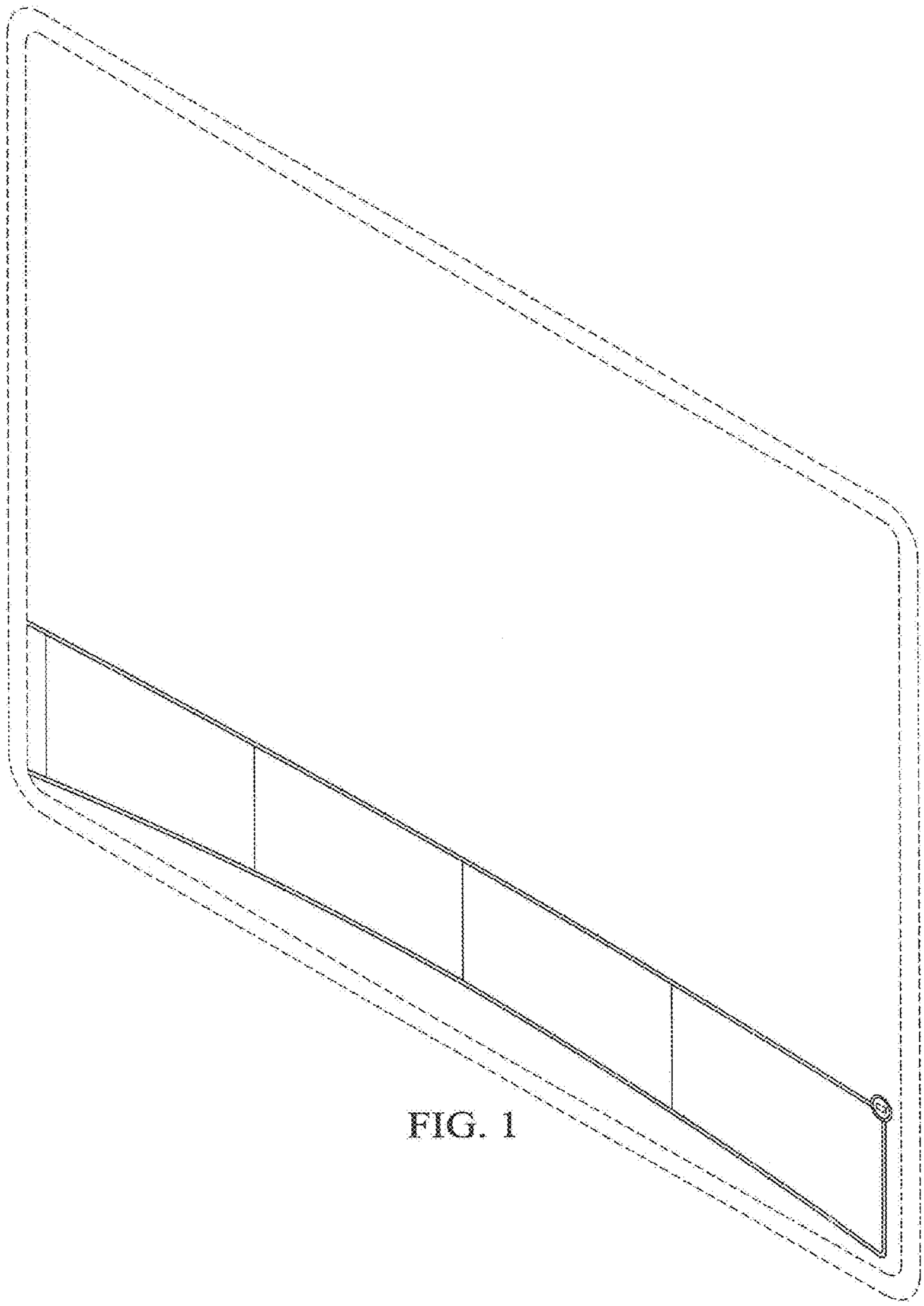

FIG. 1

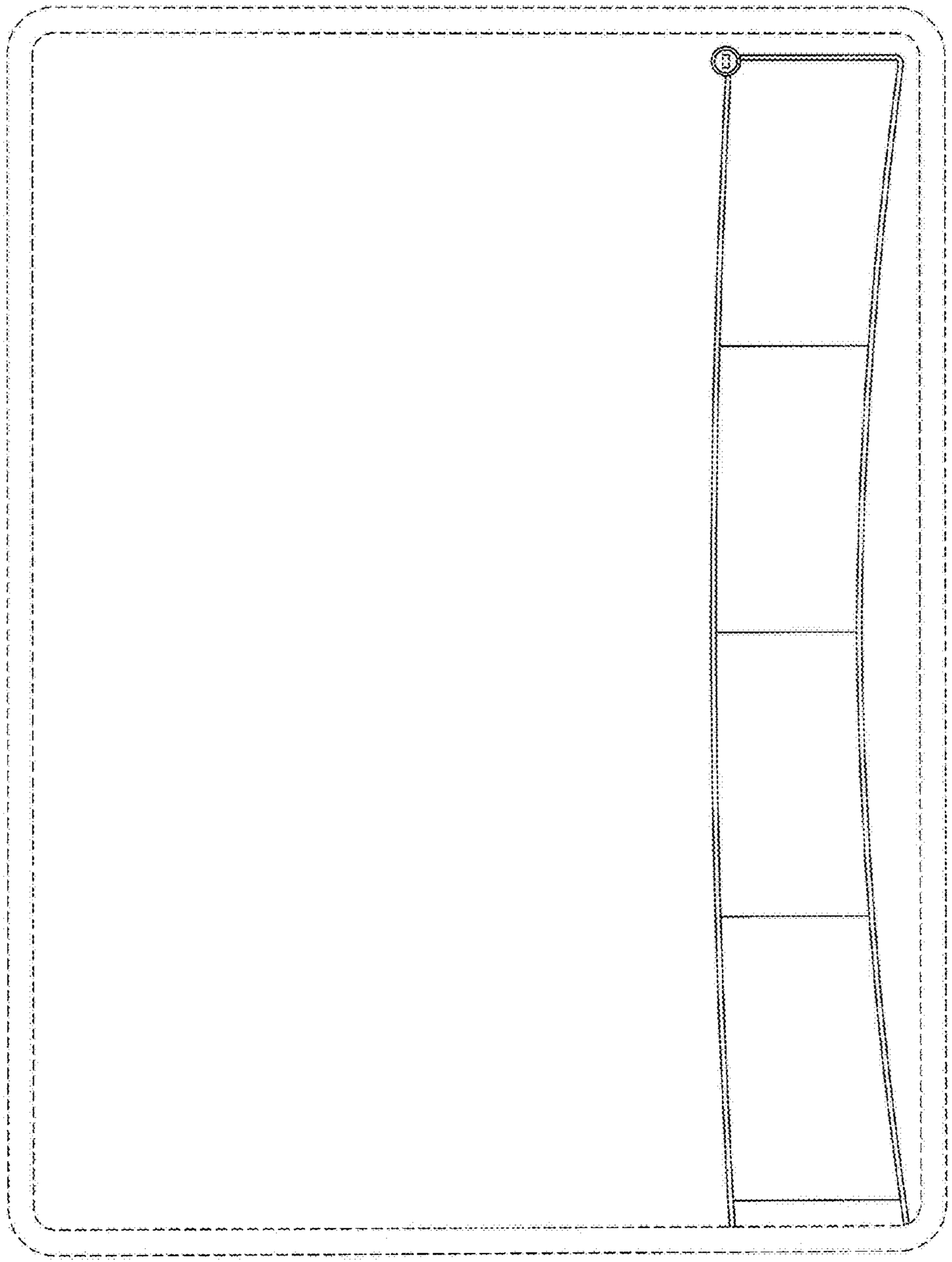

FIG. 2

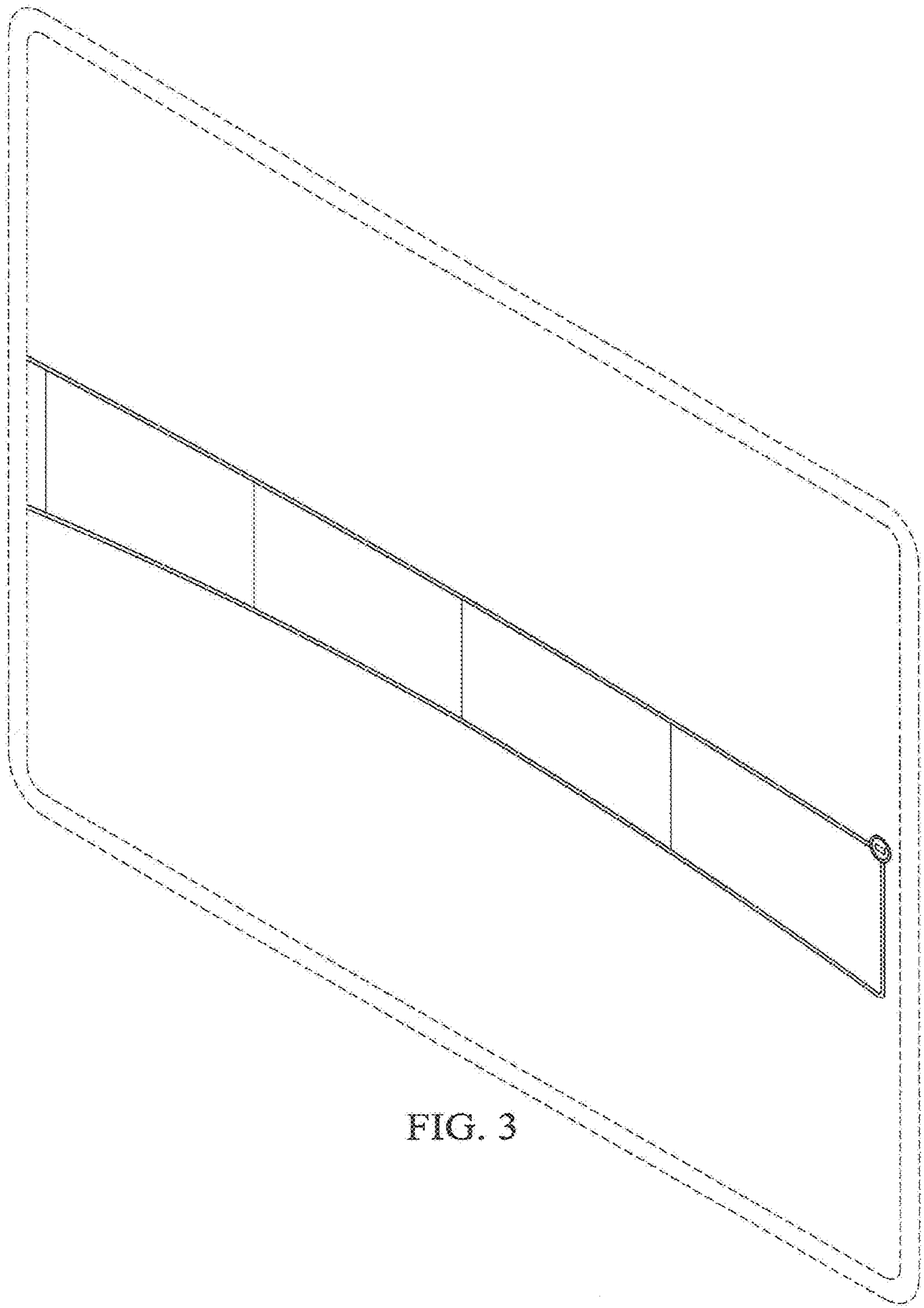

FIG. 3

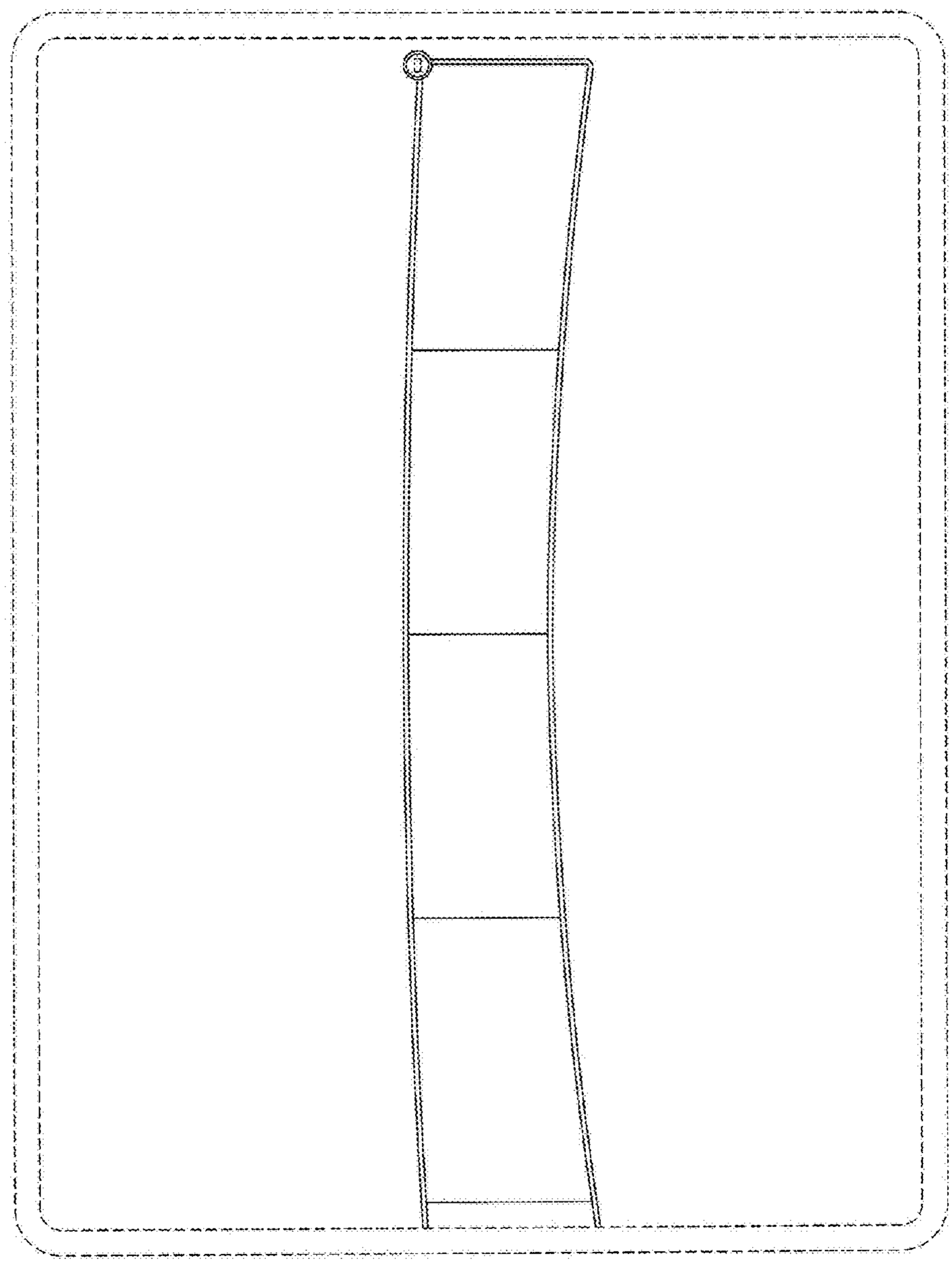

FIG. 4

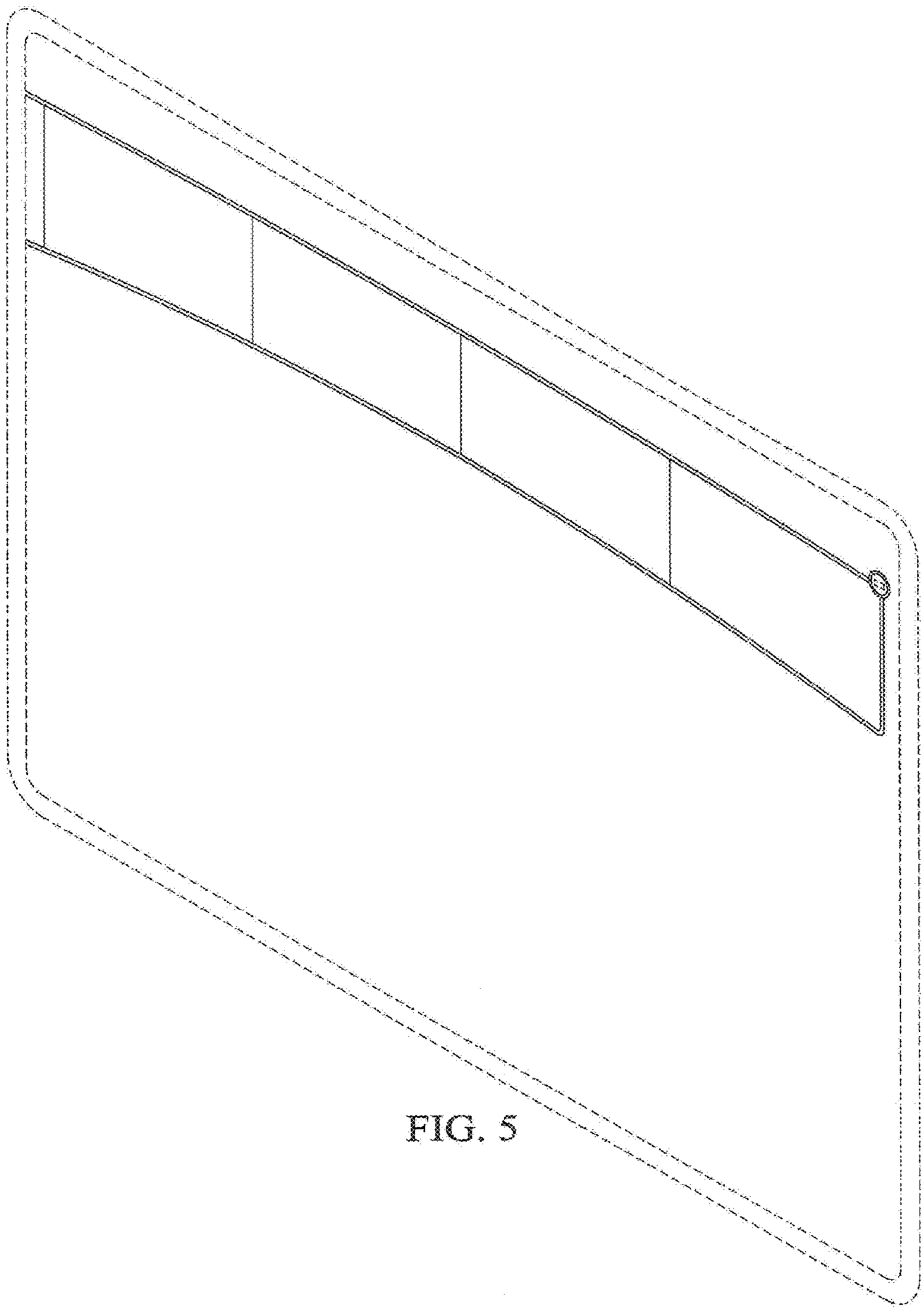

FIG. 5

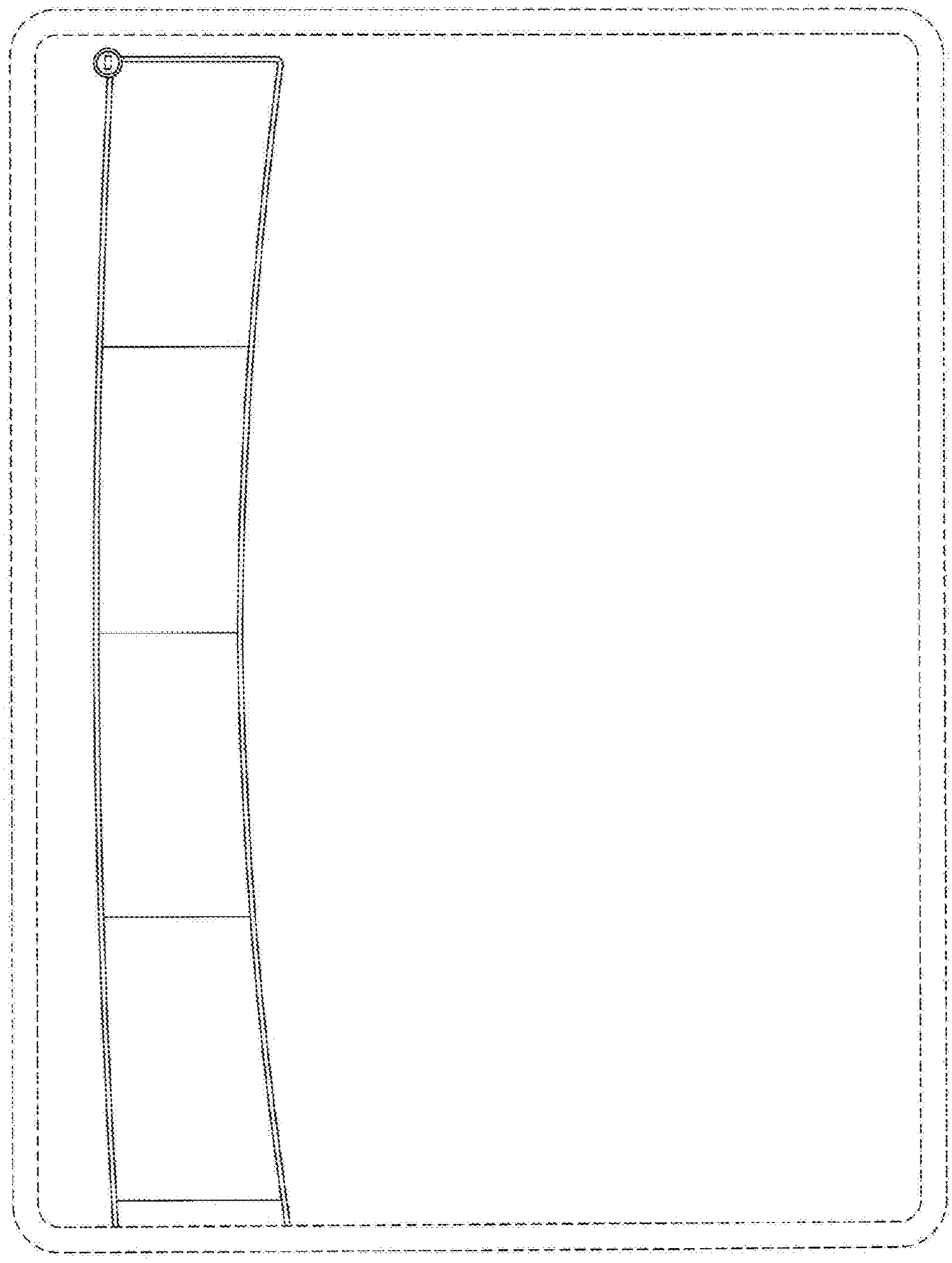

FIG. 6

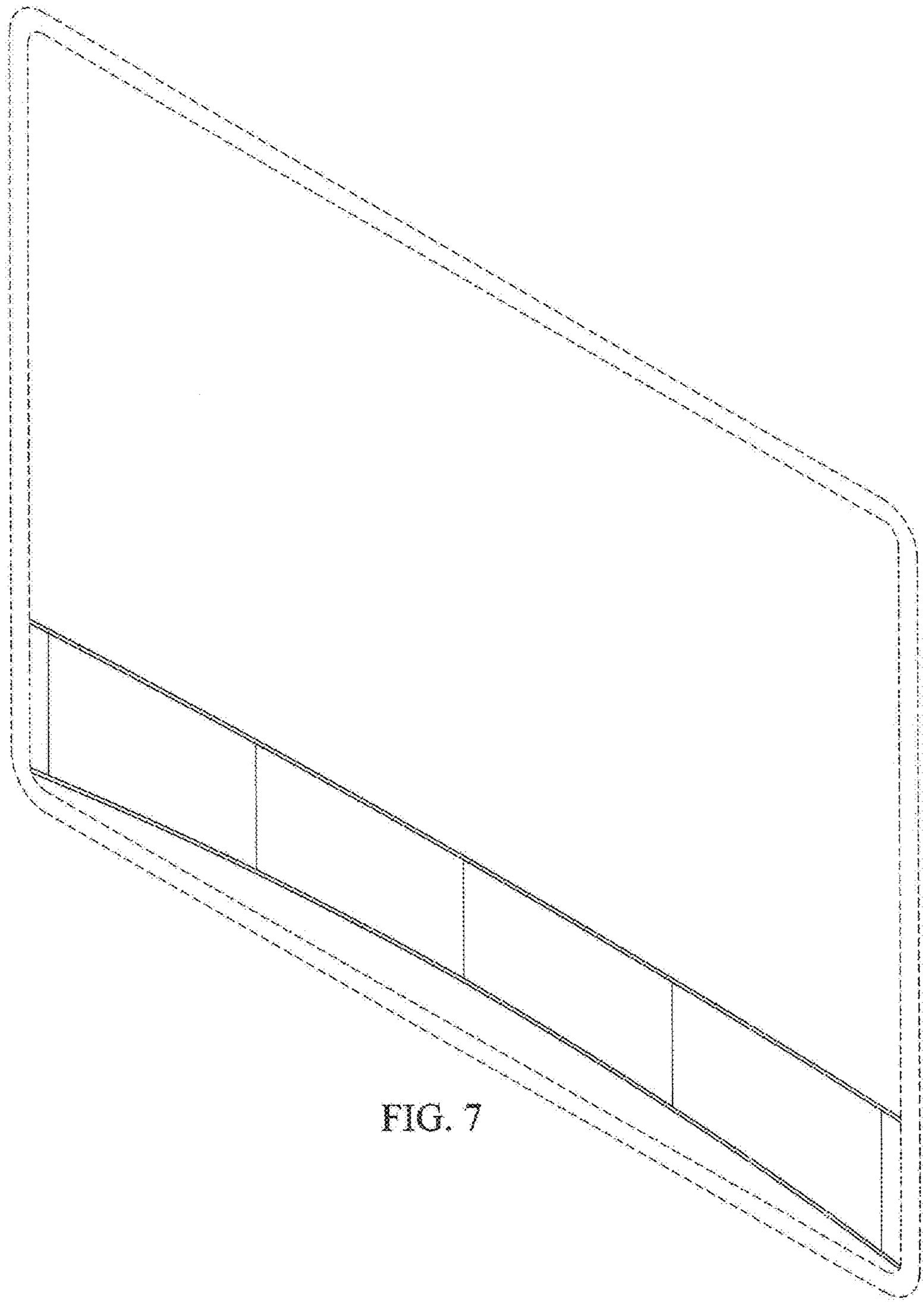

FIG. 7

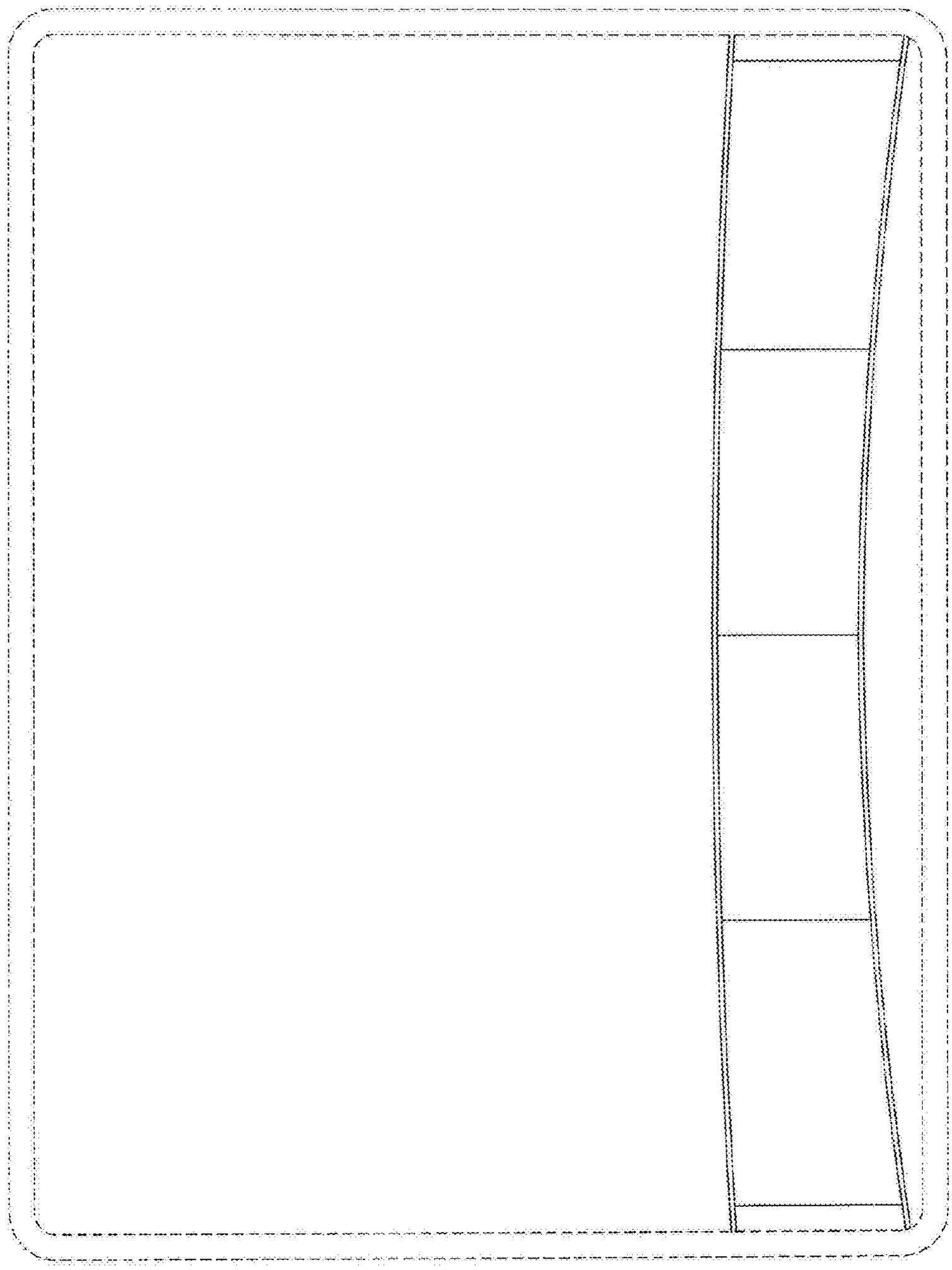

FIG. 8

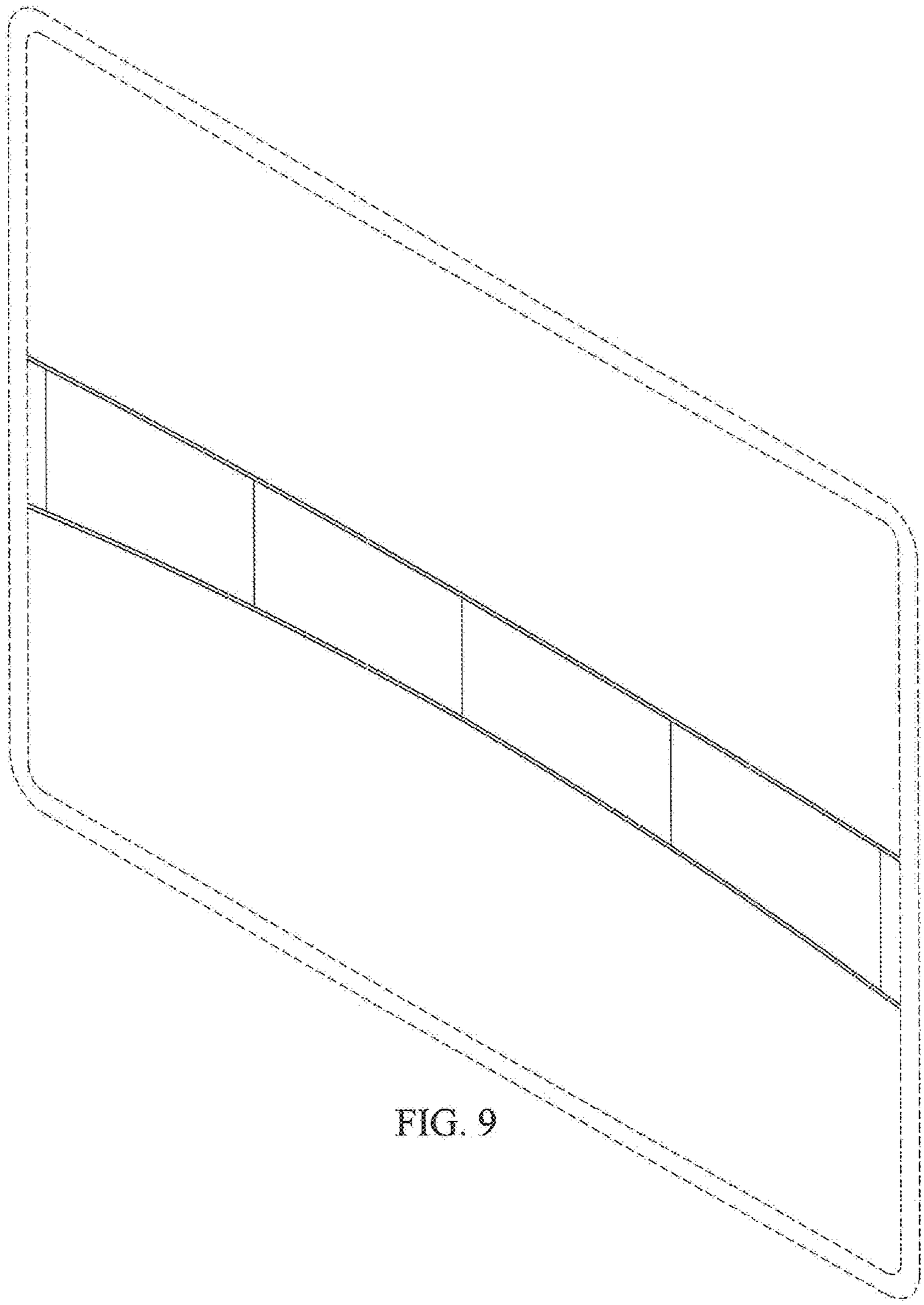

FIG. 9

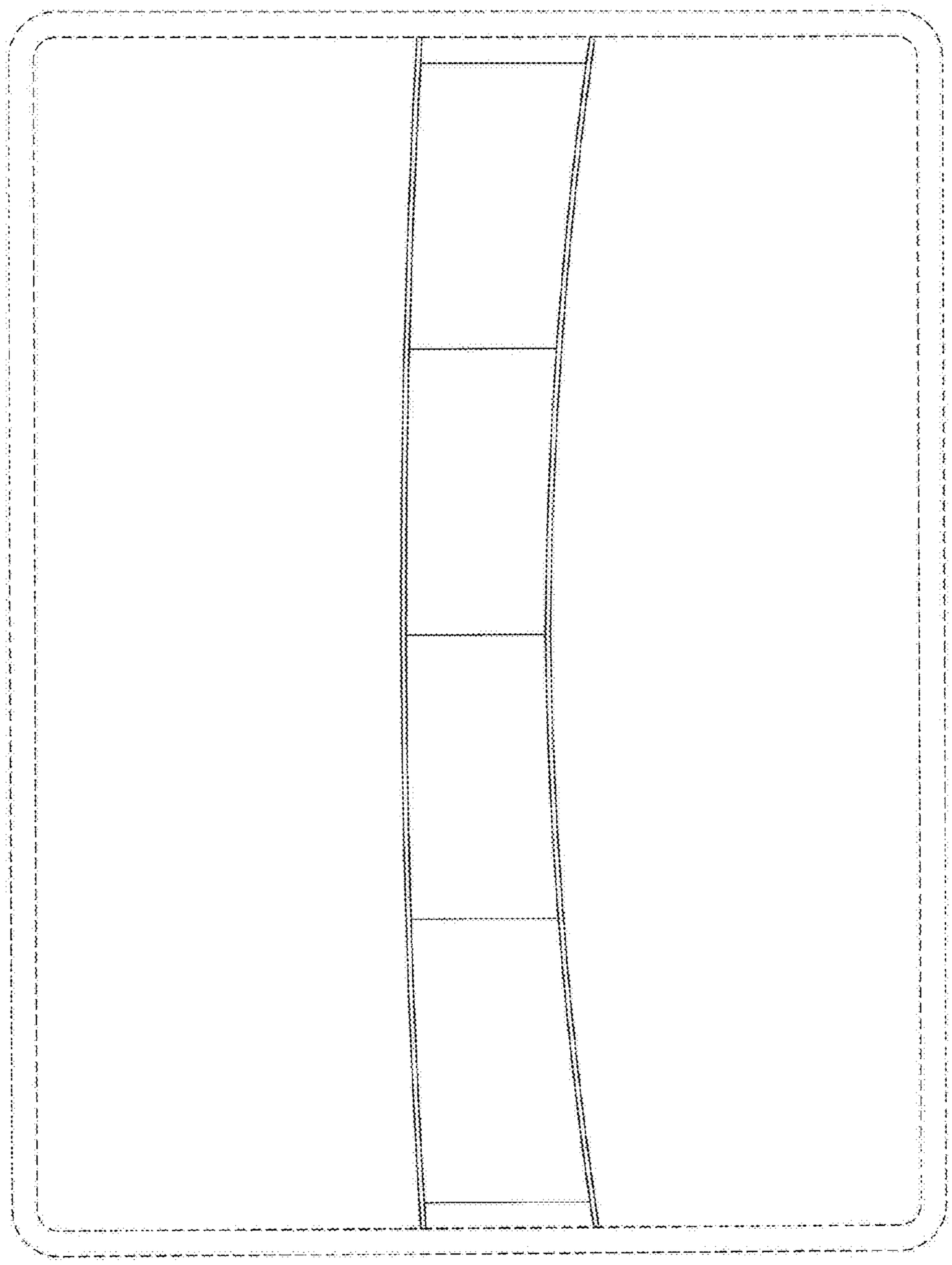

FIG. 10

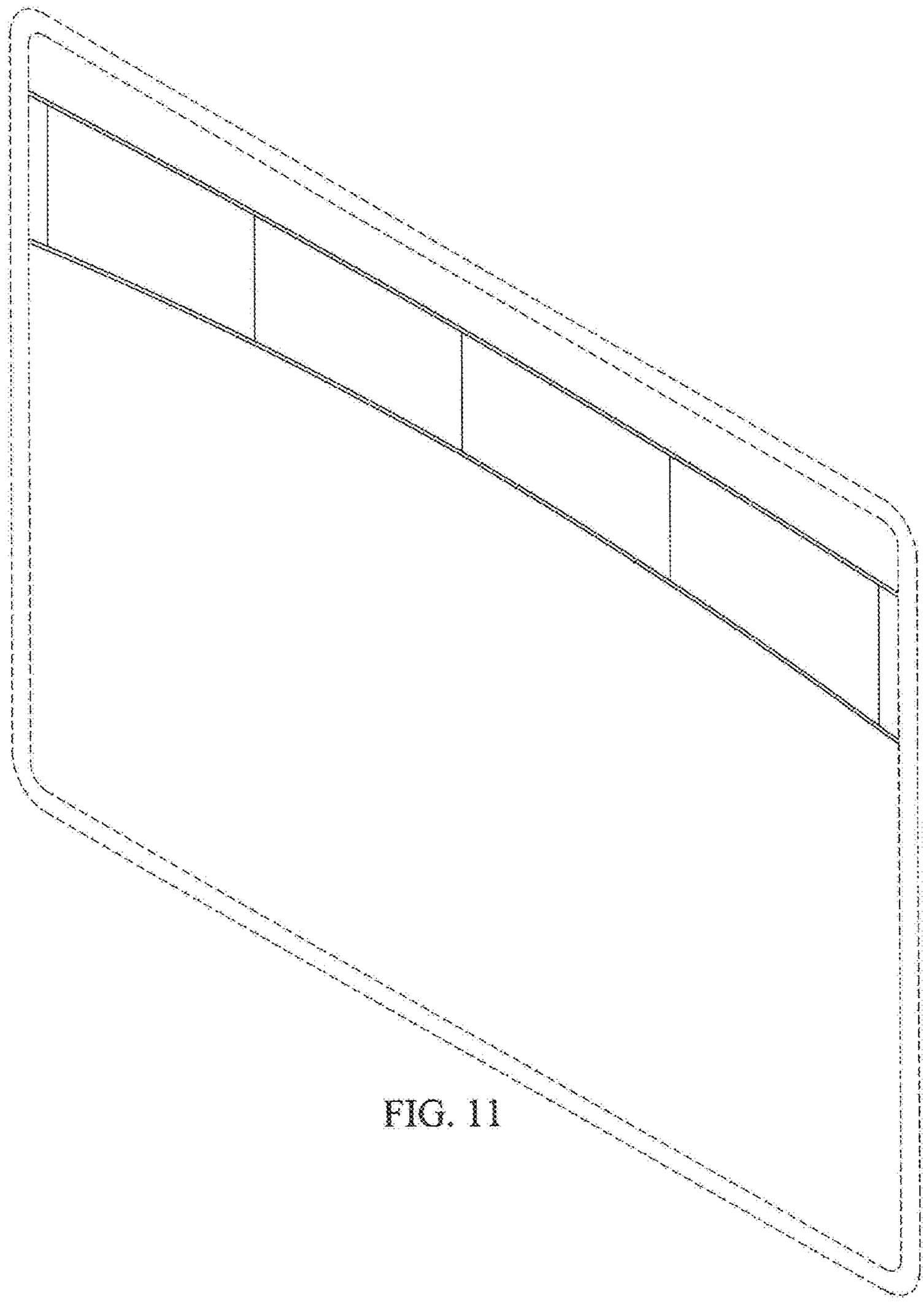

FIG. 11

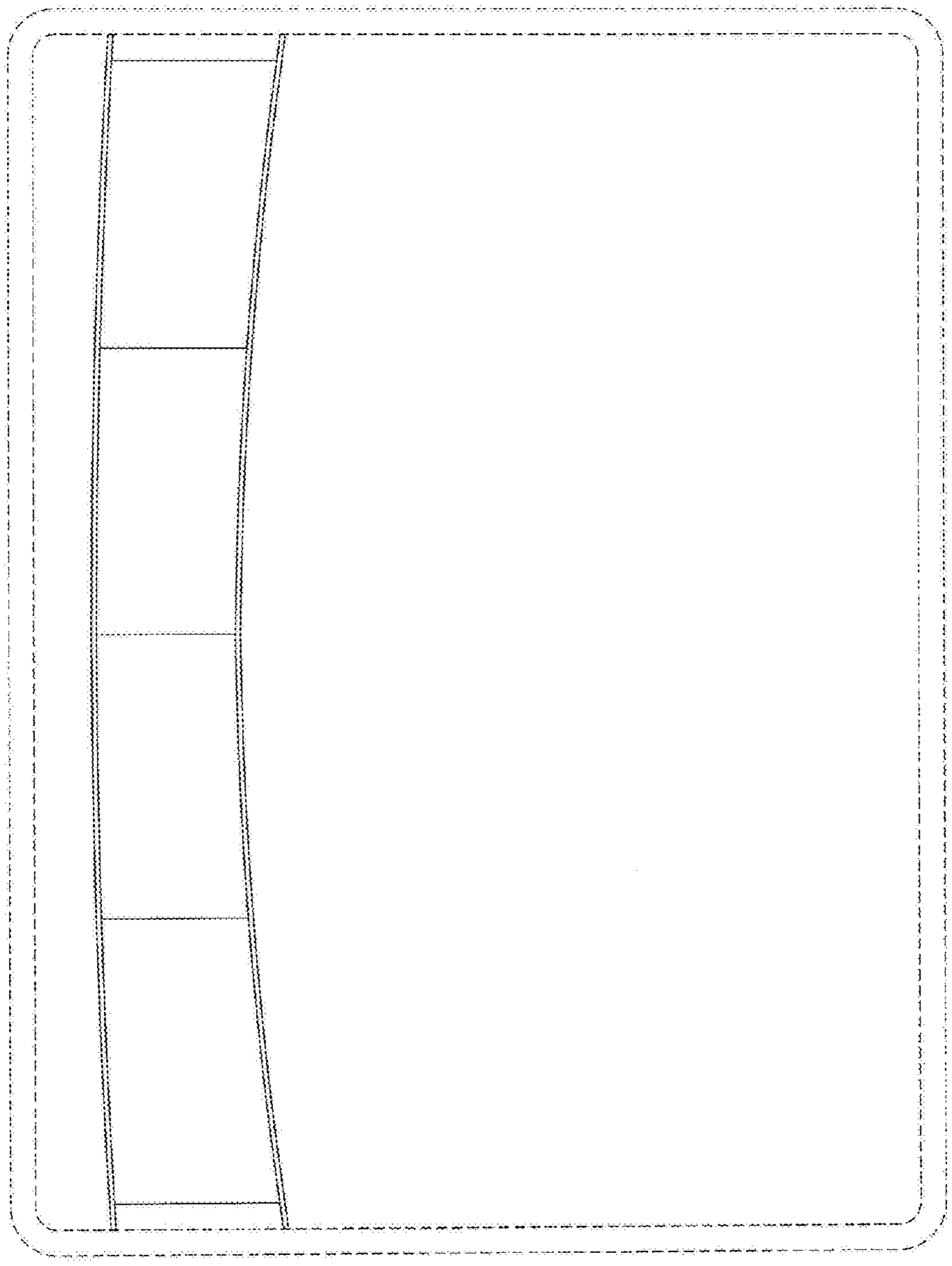

FIG. 12