US00D691570S

(12) United States Design Patent

Fleischer et al.

(10) Patent No.: US D691,570 S
(45) Date of Patent: ** Oct. 15, 2013

(54) **IMAGING DEVICE**

(75) Inventors: **Bianca Fleischer**, Santa Monica, CA (US); **Etienne Iliffe-Moon**, Newbury Park, CA (US); **Adil Ali**, Newbury Park, CA (US); **Shanshan Li**, Fort Collins, CO (US); **Charles E. Schinner**, Windsor, CO (US); **Edward George Trick**, Louisville, CO (US)

(73) Assignee: **Hewlett-Packard Development Company, L.P.**, Houston, TX (US)

(**) Term: **14 Years**

(21) Appl. No.: **29/419,410**

(22) Filed: **Apr. 27, 2012**

(51) **LOC (9) Cl.** **14-02**

(52) **U.S. Cl.**
USPC **D14/121**

(58) **Field of Classification Search**
USPC D14/421–425; D18/55, 49, 46, 40, D18/36–39, 41, 44, 45, 47, 48, 50–54, 56; 235/462, 455, 470, 462.43, 482, 483; 358/474, 486, 488, 496, 497, 498, 452, 358/449, 451, 453, 1.13; 318/685, 696; 355/81, 75; 399/405, 367, 379, 380; 382/217; 715/209, 222, 226, 274; 400/613, 613.1–613.4, 690.1–690.4, 400/691–694
See application file for complete search history.

(56) **References Cited**

U.S. PATENT DOCUMENTS

D311,909 S * 11/1990 Chen D14/420
D324,536 S * 3/1992 Isomoto et al. D18/49
D329,455 S * 9/1992 Sugihara et al. D18/49
D350,769 S * 9/1994 Hattori et al. D18/49
5,353,360 A * 10/1994 Obara 382/321
D374,457 S * 10/1996 Naruki D18/49
5,564,686 A * 10/1996 Horng 271/4.01
5,628,575 A * 5/1997 Morikawa et al. 400/693
D380,204 S * 6/1997 Kogoh et al. D14/425
D384,693 S * 10/1997 Kenmochi et al. D18/49
D415,127 S * 10/1999 Ueda D14/425
D428,049 S * 7/2000 Imai D18/36
D436,122 S * 1/2001 Isomoto D18/49
D436,369 S * 1/2001 Sasaki et al. D18/39
D451,123 S * 11/2001 Isogai et al. D18/36
D478,082 S * 8/2003 Khovaylo et al. D14/425
D483,402 S * 12/2003 LaBarbera et al. D18/53
D493,817 S * 8/2004 Yoshida et al. D18/39
D494,211 S * 8/2004 Yoshida et al. D18/39
D497,943 S * 11/2004 LaBarbera D18/53
D501,667 S * 2/2005 Ishigami et al. D18/50
D502,500 S * 3/2005 Hoshiya et al. D18/50
D511,776 S * 11/2005 Sakamoto D14/421
D516,081 S * 2/2006 Takimoto D14/463
D518,515 S * 4/2006 Miyauchi et al. D18/55

(Continued)

Primary Examiner — Susan Moon Lee

(57) **CLAIM**

The ornamental design for an imaging device, substantially as shown and described.

DESCRIPTION

FIG. **1** is a right-front perspective view of an imaging device, shown illustratively with a pulled out keyboard in unclaimed broken lines;
FIG. **2** is a front view thereof;
FIG. **3** is a rear view thereof;
FIG. **4** is a left side view thereof;
FIG. **5** is a right side view thereof;
FIG. **6** is a top view thereof;
FIG. **7** is a bottom view thereof; and,
FIG. **8** is a right-front perspective view of the imaging device, shown illustratively with a stowed away keyboard in unclaimed broken lines.
Broken lines and portions contained within broken lines are not claimed.

1 Claim, 8 Drawing Sheets

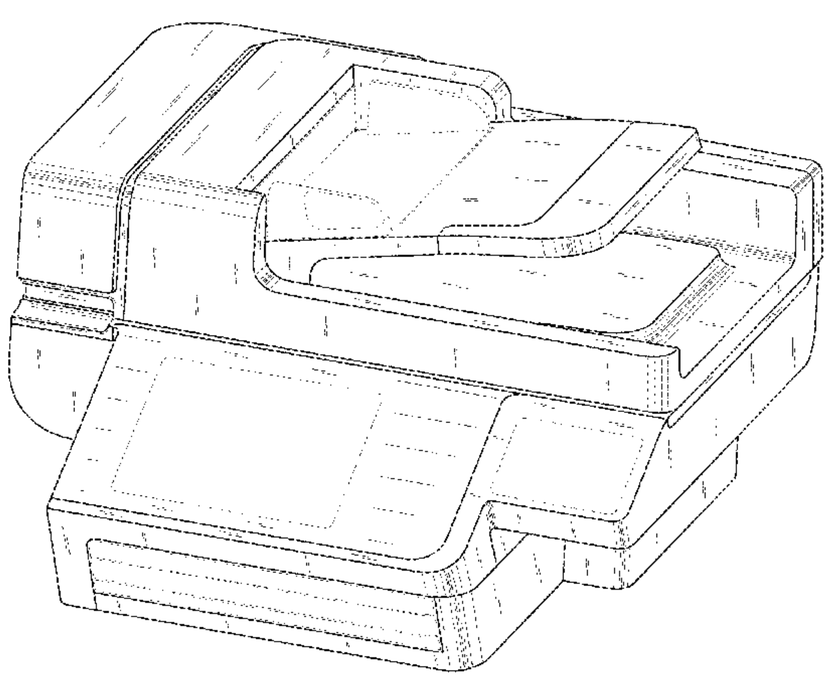

(56) **References Cited**

U.S. PATENT DOCUMENTS

D528,154 S * 9/2006 Hattori D18/54
D528,155 S * 9/2006 Katayama D18/55
D530,737 S * 10/2006 Lim et al. D18/50
D532,449 S * 11/2006 Tjin Wong Joe et al. D18/55
D532,450 S * 11/2006 Smith et al. D18/55
D533,218 S * 12/2006 Gant et al. D18/55
D534,175 S * 12/2006 Orihashi et al. D14/463
D534,578 S * 1/2007 Katayama et al. D18/55
D535,686 S * 1/2007 Ishio D18/39
D536,372 S * 2/2007 Lim et al. D18/53
D545,357 S * 6/2007 Hattori et al. D18/55
D550,279 S * 9/2007 Tani D18/50
D550,768 S * 9/2007 Hoshiya et al. D18/55
D551,700 S * 9/2007 Park et al. D18/55
D555,195 S * 11/2007 Park et al. D18/55
D556,257 S * 11/2007 Yamaguchi D18/55
7,298,979 B2 * 11/2007 Kitozaki 399/7
D557,737 S * 12/2007 Falk et al. D18/53
D557,738 S * 12/2007 Falk D18/53
D558,824 S * 1/2008 Alfonso et al. D18/55
D561,250 S * 2/2008 Smith et al. D18/55
D561,251 S * 2/2008 Tjin Wong Joe et al. D18/55
D561,824 S * 2/2008 Park et al. D18/55
D573,145 S * 7/2008 Laidlaw et al. D14/421
D573,633 S * 7/2008 Laidlaw et al. D18/55
D574,886 S * 8/2008 Mase et al. D18/55
D575,330 S * 8/2008 Egami et al. D18/55
D576,203 S * 9/2008 Laidlaw et al. D18/55
D579,973 S * 11/2008 Park et al. D18/55
D580,483 S * 11/2008 Park et al. D18/39
D581,976 S * 12/2008 Park et al. D18/55
D584,766 S * 1/2009 Tani D18/55
D586,384 S * 2/2009 Yamaguchi et al. D18/55
D586,385 S * 2/2009 Kim et al. D18/55
D589,084 S * 3/2009 Suzuki et al. D18/36
D591,302 S * 4/2009 Yagi et al. D14/421
D594,508 S * 6/2009 Joe et al. D18/55
D595,347 S * 6/2009 Tjin Wong Joe et al. D18/55
D596,226 S * 7/2009 Yamaguchi D18/55
D596,227 S * 7/2009 Larson et al. D18/55
D603,863 S * 11/2009 Sugitani et al. D14/421
D605,222 S * 12/2009 Yoshioka et al. D18/55
D608,823 S * 1/2010 Tomono D18/55
D609,270 S * 2/2010 Kato et al. D18/55
D611,091 S * 3/2010 Ishikawa et al. D18/55
D613,791 S * 4/2010 Yoshioka et al. D18/55
D613,792 S * 4/2010 Suzuki et al. D18/55
D614,693 S * 4/2010 Kato et al. D18/50
D616,927 S * 6/2010 Suzuki et al. D18/55
D619,646 S * 7/2010 Brown et al. D18/49
D622,272 S * 8/2010 Machida et al. D14/421
D622,762 S * 8/2010 Egami et al. D18/55
D633,555 S * 3/2011 Egami D18/50
D639,851 S * 6/2011 Penke et al. D18/55
D641,778 S * 7/2011 Lee et al. D18/55
D642,212 S * 7/2011 Terenzio et al. D18/55
D647,133 S * 10/2011 Sato et al. D18/55
D650,388 S * 12/2011 Hidaka D14/422
D660,350 S * 5/2012 Falk et al. D18/53
D660,351 S * 5/2012 Larson et al. D18/55
D661,345 S * 6/2012 Asano et al. D18/50
D665,013 S * 8/2012 Ishikawa et al. D18/50
D666,239 S * 8/2012 Larson et al. D18/55
D667,017 S * 9/2012 Tani D14/463
D667,486 S * 9/2012 Inoue et al. D18/50
D667,488 S * 9/2012 Inoue et al. D18/55
D673,213 S * 12/2012 Kim et al. D18/55
D674,011 S * 1/2013 Sato D18/55
D674,435 S * 1/2013 Inoue et al. D18/55
D676,483 S * 2/2013 Kim et al. D18/50
D680,163 S * 4/2013 Lim et al. D18/55
D680,581 S * 4/2013 Nakata et al. D18/50
D682,928 S * 5/2013 Kim et al. D18/55
2002/0113979 A1 * 8/2002 Rahgozar et al. 358/1.6
2003/0164957 A1 * 9/2003 Komaki 358/1.6
2003/0179390 A1 * 9/2003 Kitozaki 358/1.6
2005/0078340 A1 * 4/2005 Kato 358/474
2007/0001015 A1 * 1/2007 Suzuki et al. 235/472.02

* cited by examiner

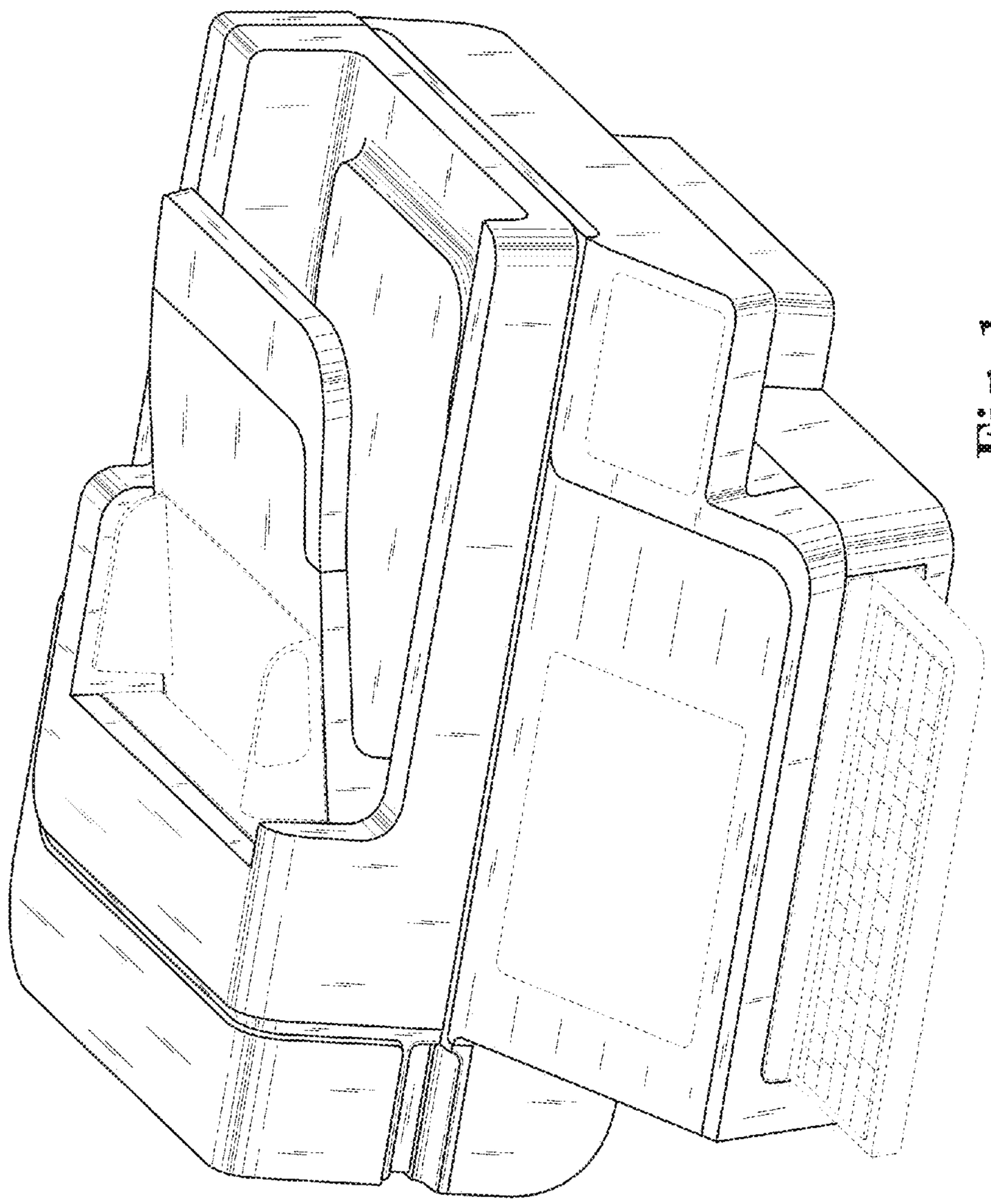

Fig. 1

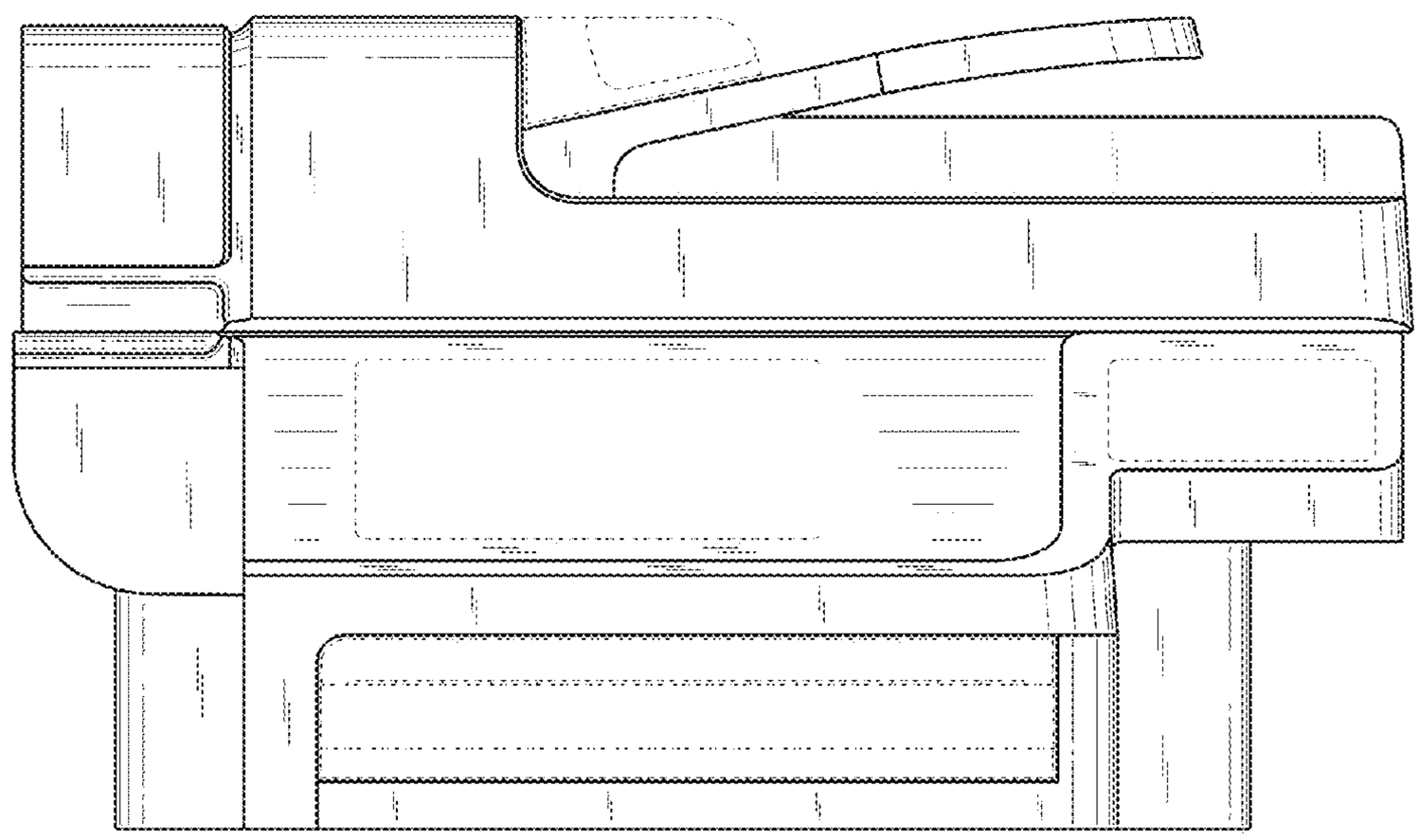

Fig. 2

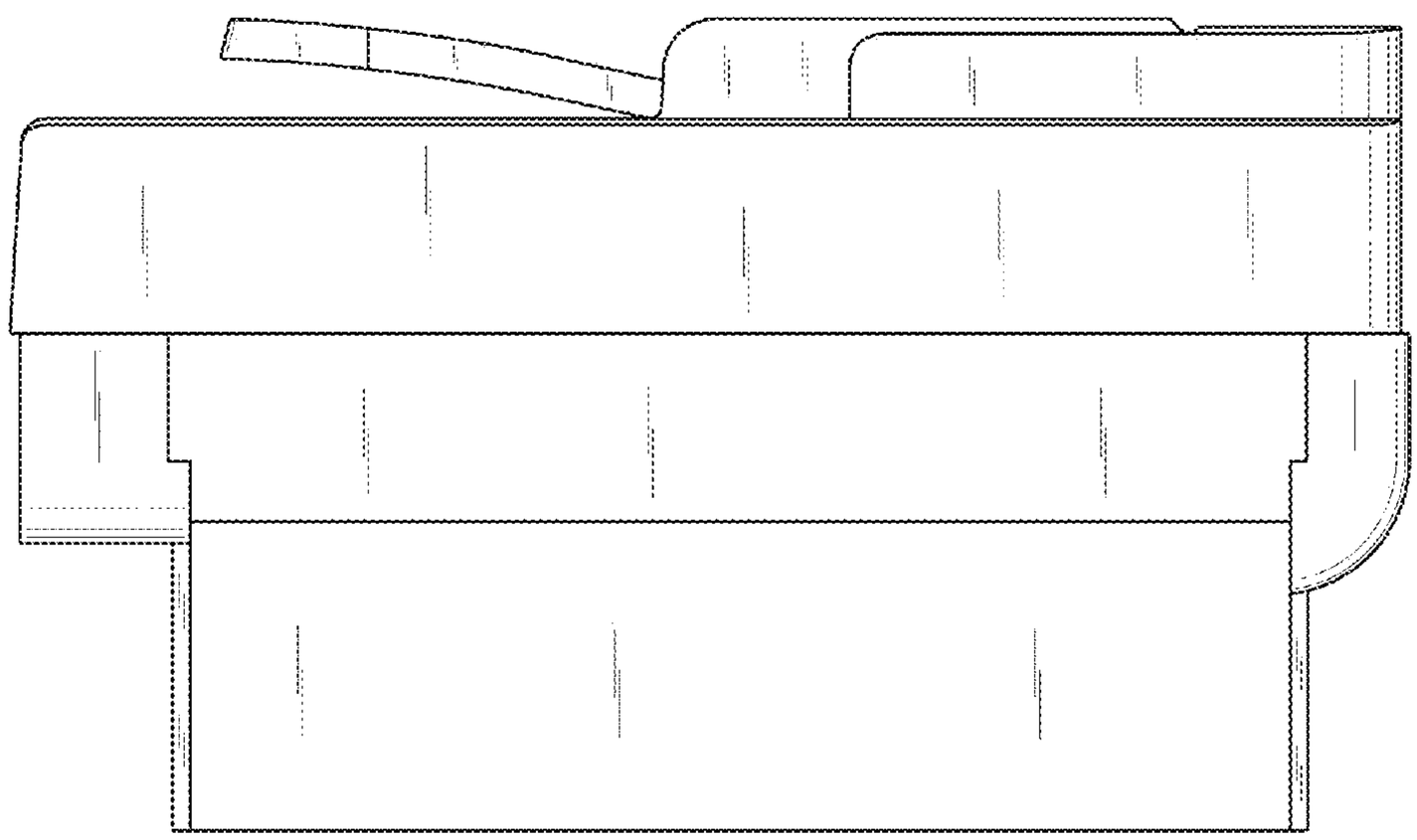

Fig. 3

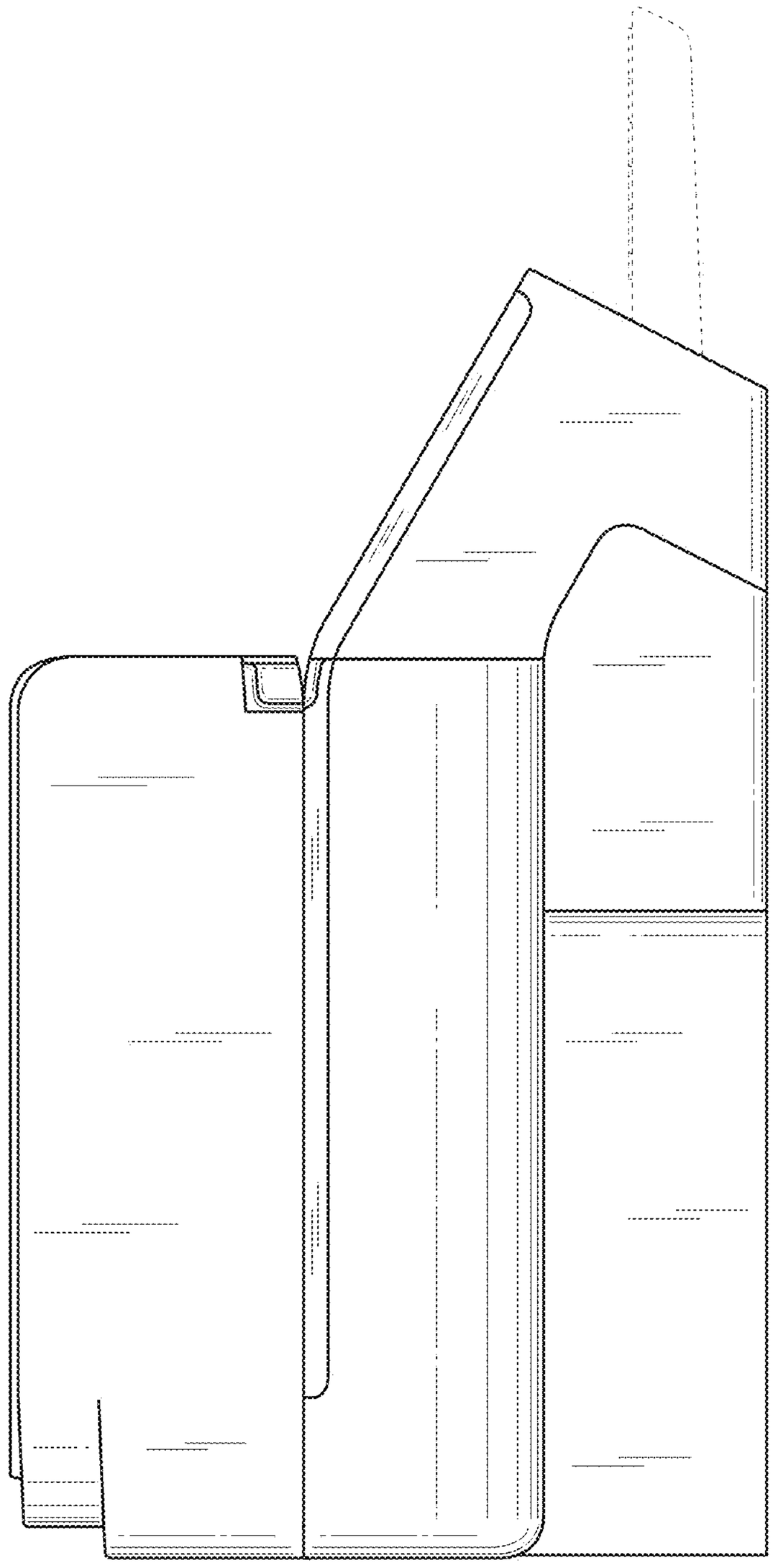

Fig. 4

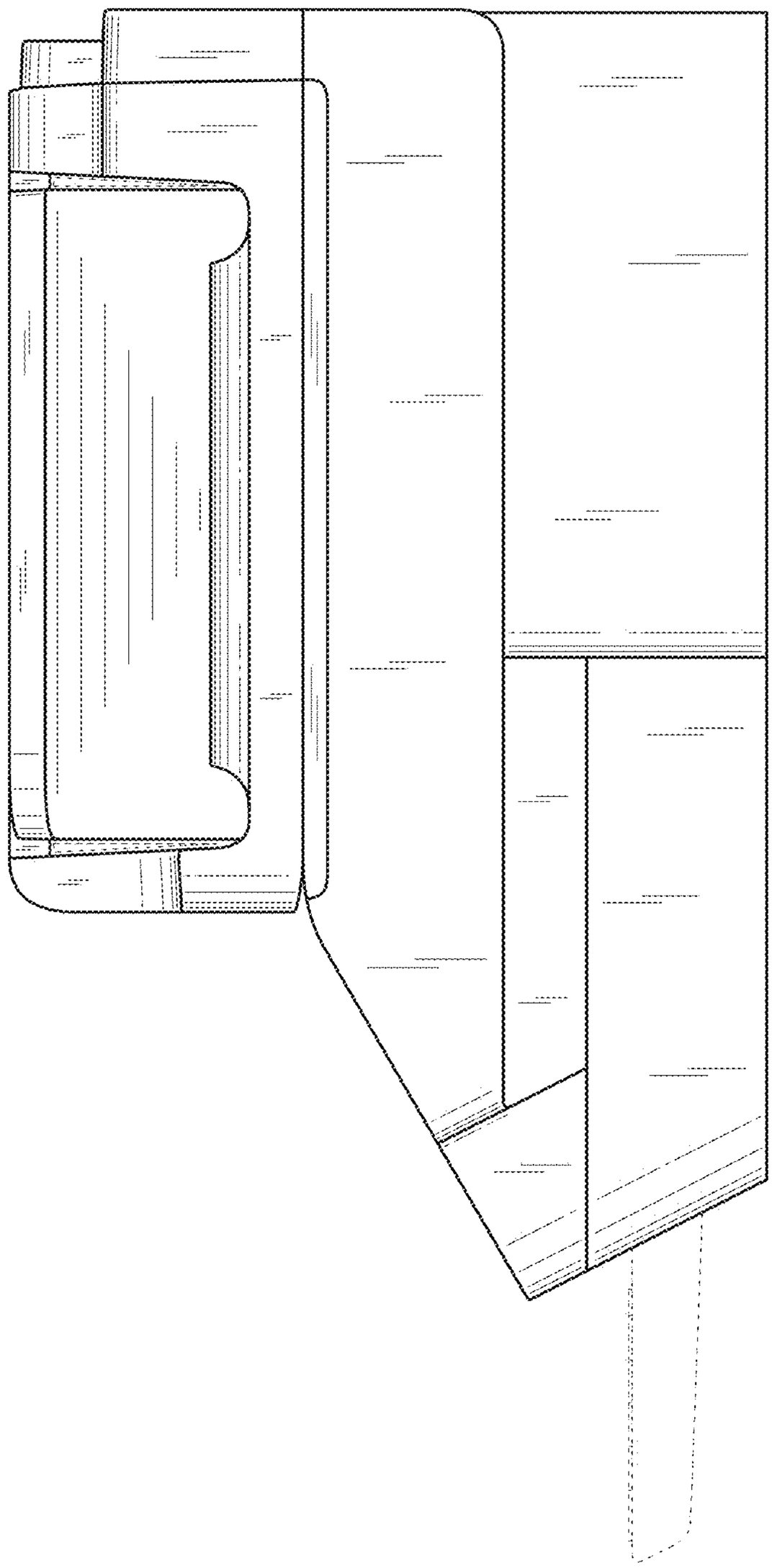

Fig. 5

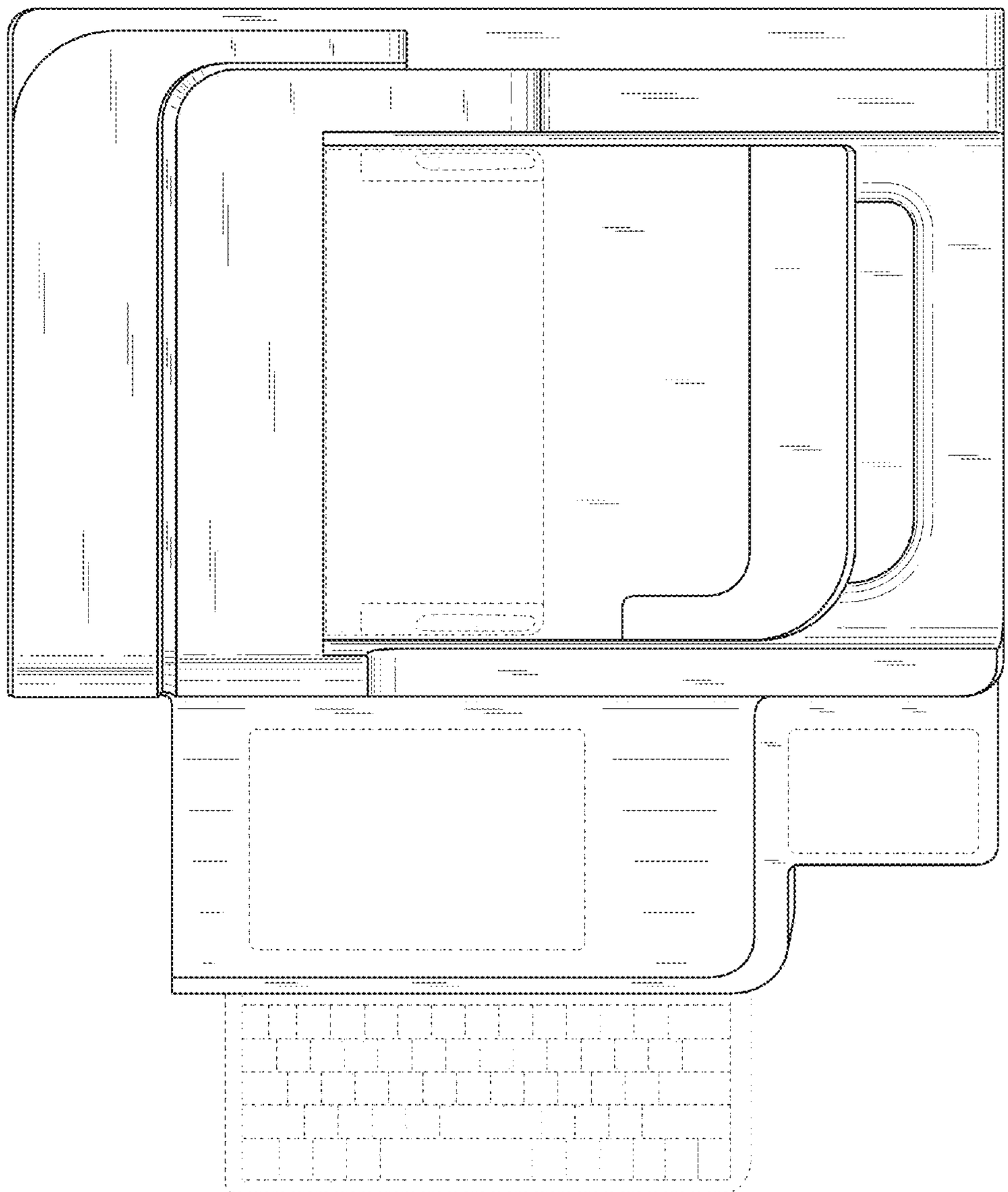

Fig. 6

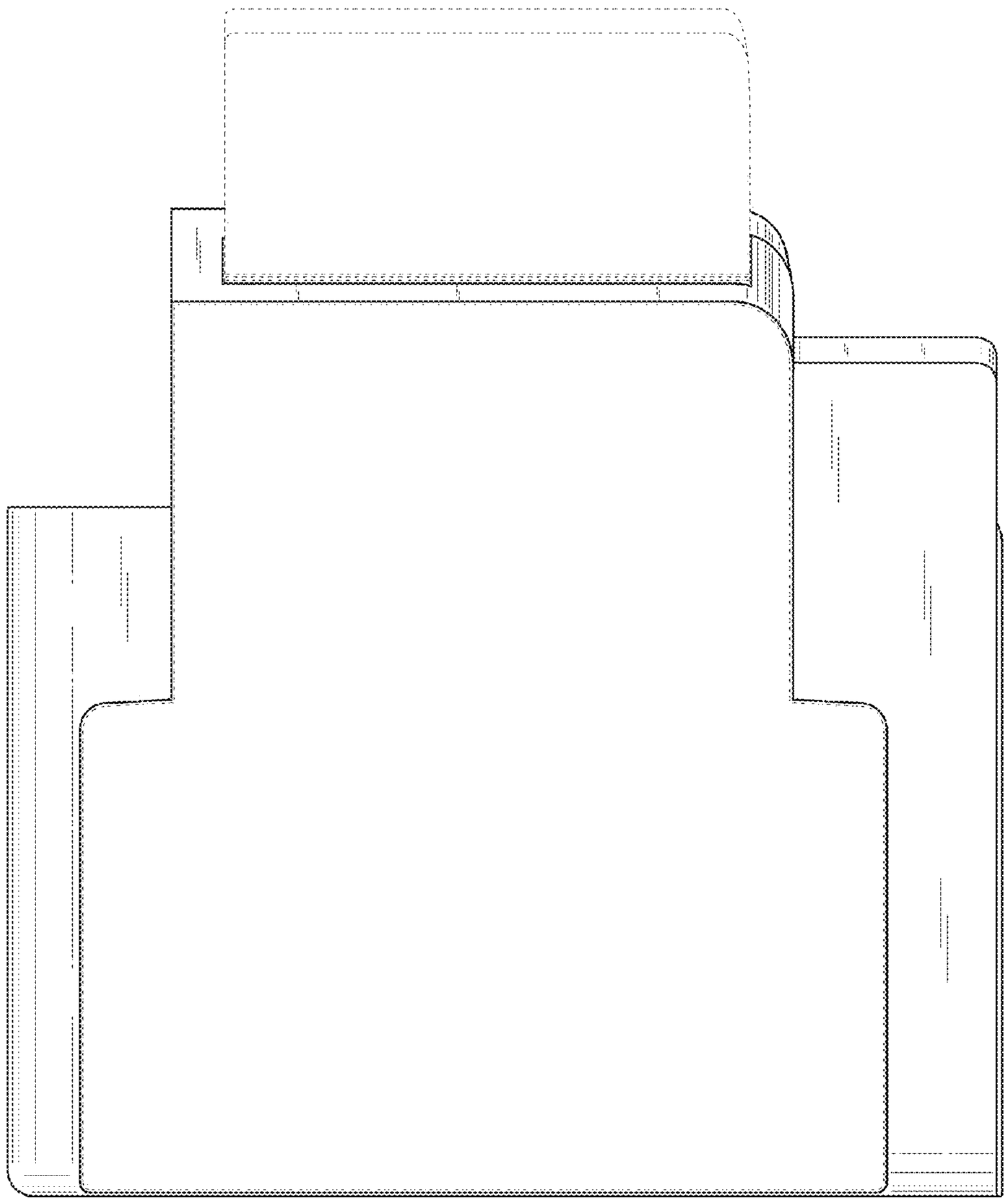

Fig. 7

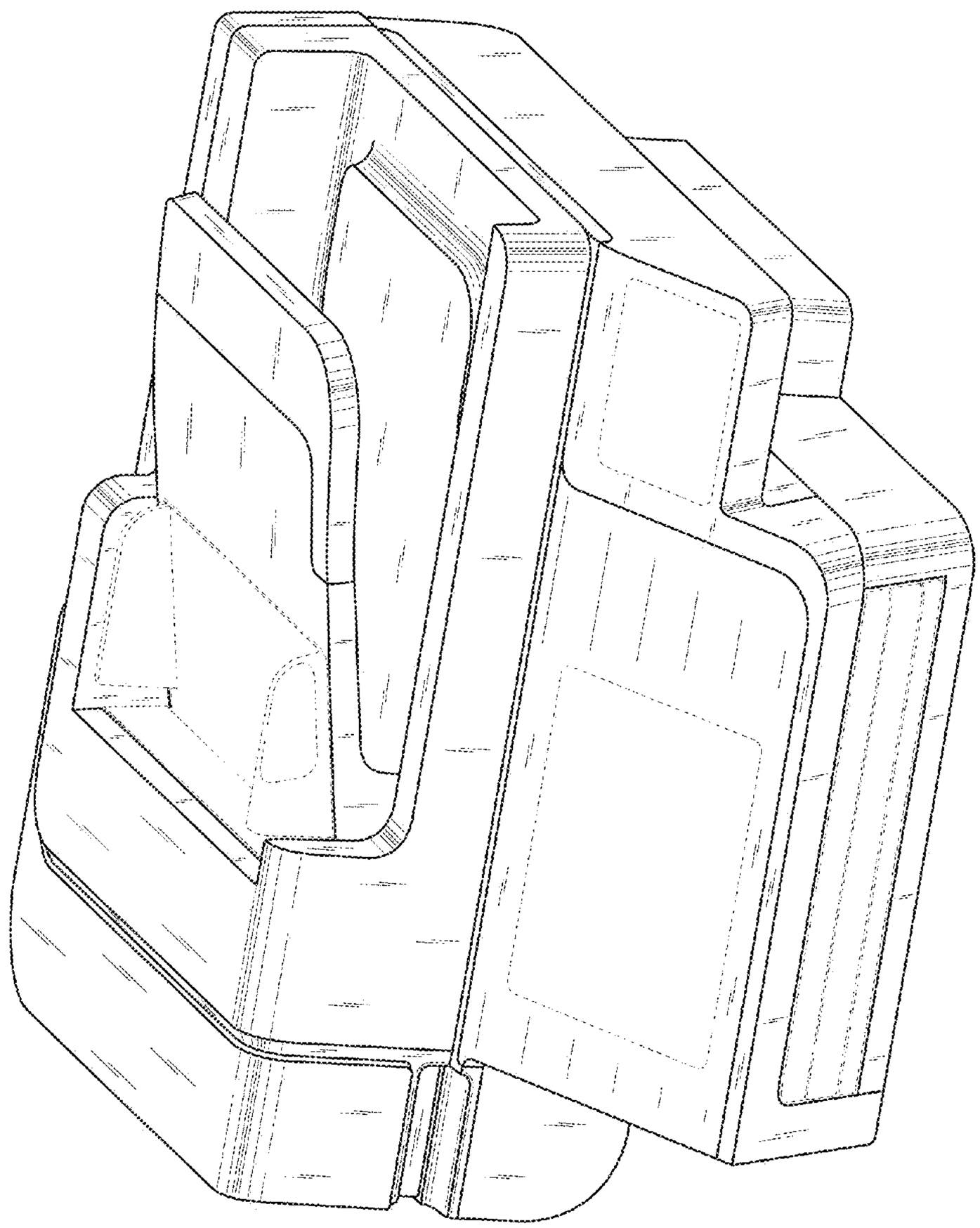

Fig. 8