US00D689046S

(12) United States Design Patent

Park et al.

(10) Patent No.: US D689,046 S
(45) Date of Patent: ** Sep. 3, 2013

(54) **PORTABLE COMPUTER**

(75) Inventors: **Ji-Sang Park**, Yongin (KR); **Woo-Teik Lim**, Seoul (KR); **Wan-Sup Kim**, Seoul (KR)

(73) Assignee: **Samsung Electronics Co., Ltd.**, Suwon-Si (KR)

(**) Term: **14 Years**

(21) Appl. No.: **29/425,732**

(22) Filed: **Jun. 26, 2012**

(30) **Foreign Application Priority Data**

Jan. 9, 2012 (KR) 30-2012-0001221

(51) **LOC (9) Cl.** **14-02**

(52) **U.S. Cl.**
USPC **D14/315**

(58) **Field of Classification Search**
USPC ..... D14/315–327, 455; D18/1, 2, 7, D18/11; 235/145 A, 145 R; 341/22, 23; 345/104, 156, 168, 169, 173; 361/679.08, 361/679.09, 679.11, 679.26, 679.27
See application file for complete search history.

(56) **References Cited**

U.S. PATENT DOCUMENTS

D284,084	S	6/1986	Ferrara, Jr.	
D306,583	S	3/1990	Krolopp et al.	
D332,944	S	2/1993	Kim	
D333,574	S	3/1993	Ackeret	
D334,738	S	4/1993	Kim	
D335,870	S	5/1993	Yun	
D336,465	S	6/1993	Kim	
D337,569	S	7/1993	Kando	
D338,457	S	8/1993	Kim	
D348,442	S	7/1994	Yoon	
6,067,224	A	5/2000	Nobuchi	
6,519,139	B2	2/2003	Kambayashi	
D492,678	S	7/2004	Kim et al.	
6,775,129	B1 *	8/2004	Ghosh et al.	361/679.27
6,781,819	B2 *	8/2004	Yang et al.	361/679.09
6,785,128	B1 *	8/2004	Yun	361/679.27
D500,991	S	1/2005	Niitsu	
D504,889	S	5/2005	Andre et al.	
6,972,946	B2	12/2005	Hamada et al.	
7,012,802	B2	3/2006	Nakajima et al.	

(Continued)

FOREIGN PATENT DOCUMENTS

KR	3005506890000	1/2010
KR	3005544080000	3/2010

(Continued)

OTHER PUBLICATIONS

U.S. Appl. No. 29/405,517, Applicant: Kim, et al., filed Nov. 3, 2011 entitled Notebook Computer.

(Continued)

Primary Examiner — Freda S Nunn
(74) *Attorney, Agent, or Firm* — Wood, Herron & Evans, LLP

(57) **CLAIM**

The ornamental design for a portable computer, as shown and described.

DESCRIPTION

FIG. **1** is a top front perspective view of a portable computer showing our new design;
FIG. **2** is a front elevational view thereof;
FIG. **3** is a rear elevational view thereof;
FIG. **4** is a left side elevational view thereof;
FIG. **5** is a right side elevational view thereof;
FIG. **6** is a top plan view thereof; and,
FIG. **7** is a bottom plan view thereof.

1 Claim, 4 Drawing Sheets

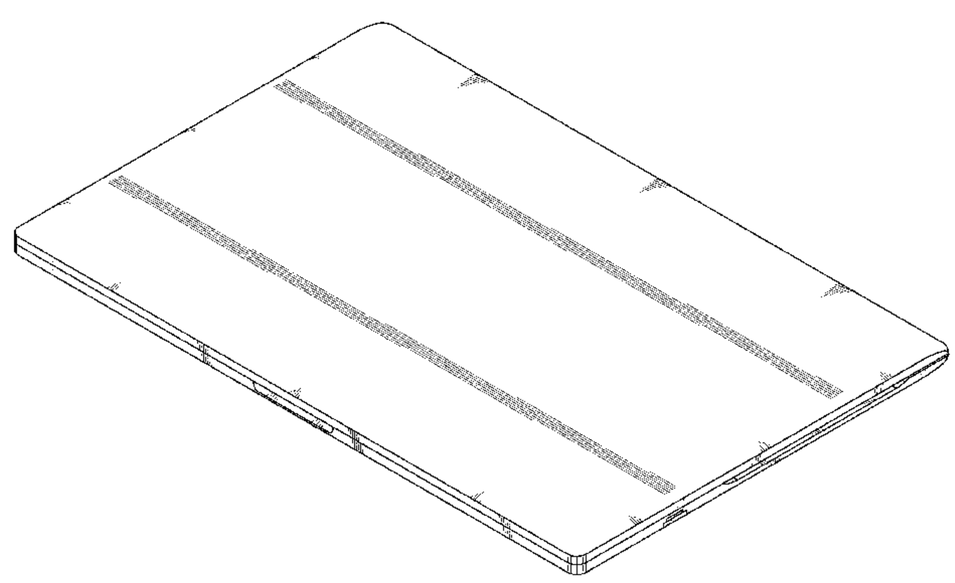

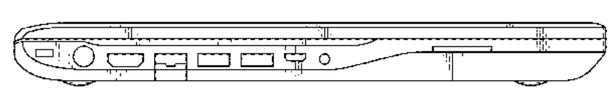

(56) **References Cited**

U.S. PATENT DOCUMENTS

D523,010	S	6/2006	Paek et al.
D523,431	S	6/2006	Yoon
D523,851	S	6/2006	Jeong et al.
D523,852	S	6/2006	Kim et al.
D524,306	S	7/2006	Yun et al.
D524,307	S	7/2006	Kim et al.
D532,791	S	11/2006	Kim
D535,652	S	1/2007	Lee et al.
D547,309	S	7/2007	Yoon
D547,310	S	7/2007	Yoon
D556,192	S	11/2007	Jeong et al.
D563,804	S	3/2008	Kimura et al.
D567,236	S	4/2008	Yoon
D578,523	S	10/2008	Yoon
D578,524	S	10/2008	Yoon
D578,525	S	10/2008	Yoon
D579,930	S	11/2008	Maskatia
D580,432	S	11/2008	Yun et al.
D584,738	S	1/2009	Kim et al.
D586,343	S	2/2009	Lee et al.
D586,796	S	2/2009	Lee et al.
D586,797	S	2/2009	Kawase et al.
D587,701	S	3/2009	Yoon
D590,374	S	4/2009	Madonna et al.
D592,214	S	5/2009	Bradford
D596,633	S	7/2009	Kawase et al.
D602,014	S	10/2009	Andre et al.
D602,487	S	10/2009	Maskatia
D603,391	S	11/2009	Song et al.
D603,392	S	11/2009	Jeong et al.
D603,393	S	11/2009	Paek
D603,394	S	11/2009	Lee
D603,395	S	11/2009	Hong et al.
D603,692	S	11/2009	Boyd
D603,861	S	11/2009	Hong et al.
D605,626	S	12/2009	Park
D606,067	S	12/2009	Yoon
D606,068	S	12/2009	Hong et al.
D606,069	S	12/2009	Heck et al.
D606,070	S	12/2009	Heck et al.
D606,534	S	12/2009	Hong et al.
D608,777	S	1/2010	Yoon
D610,582	S	2/2010	Sugitani et al.
D611,364	S	3/2010	Lenz et al.
D611,468	S	3/2010	Yun et al.
D613,510	S	4/2010	Tzeng et al.
D613,951	S	4/2010	Tang et al.
D613,961	S	4/2010	Lin
D614,614	S	4/2010	Yoon
D614,615	S	4/2010	Yoon
D617,793	S	6/2010	Chiang et al.
D622,268	S	8/2010	Hong et al.
D622,270	S	8/2010	Andre et al.
D626,543	S	11/2010	Hagen
D626,546	S	11/2010	Paek
D627,341	S	11/2010	Yoon
D627,667	S	11/2010	Lenz et al.
D627,773	S	11/2010	Paek
D628,195	S	11/2010	Yoon
D628,913	S	12/2010	Cheng
D629,799	S	12/2010	Andre et al.
D631,040	S	1/2011	Yoon et al.
D631,471	S	1/2011	Jensen et al.
D631,472	S	1/2011	Kawase et al.
D631,473	S	1/2011	Lee et al.
D631,878	S	2/2011	Jensen et al.
D631,879	S	2/2011	Kawase
D633,487	S	3/2011	Kim et al.
D633,488	S	3/2011	Kim et al.
D633,489	S	3/2011	Kim et al.
D633,490	S	3/2011	Kim et al.
7,916,889	B2 *	3/2011	Takakusaki 361/679.09
D636,388	S	4/2011	Kawase
D638,416	S	5/2011	Kawase
D640,255	S	6/2011	Lee et al.
D641,748	S	7/2011	Kawase
D643,031	S	8/2011	Yoon et al.
D643,032	S	8/2011	Heck et al.
D643,425	S	8/2011	Jung et al.
D646,677	S	10/2011	Moon et al.
D649,542	S	11/2011	Yoon et al.
D650,325	S	12/2011	Kim et al.
D650,378	S	12/2011	Lee et al.
D650,379	S	12/2011	Paek et al.
D651,206	S	12/2011	Kim et al.
D651,597	S	1/2012	Lee et al.
D651,598	S	1/2012	Kim et al.
D651,599	S	1/2012	Kim et al.
D651,600	S	1/2012	Lee et al.
D652,415	S	1/2012	Lee et al.
D652,416	S	1/2012	Park et al.
D652,417	S	1/2012	Lee et al.
D652,831	S	1/2012	Lee et al.
D653,669	S	2/2012	Kim et al.
D657,785	S	4/2012	Lee et al.
8,149,222	B2	4/2012	Hsieh et al.
D661,294	S	6/2012	Park et al.
D661,295	S	6/2012	Park et al.
D661,298	S	6/2012	Park et al.
D661,299	S	6/2012	Kim et al.
D661,300	S	6/2012	Kim et al.
D661,301	S	6/2012	Kim et al.
D661,302	S	6/2012	Fukasawa et al.
D664,532	S	7/2012	Lee
D664,533	S	7/2012	Lee et al.
D664,534	S	7/2012	Lee et al.
D664,535	S	7/2012	Lee et al.
D664,538	S	7/2012	Ryu et al.
D664,540	S	7/2012	Kim et al.
D664,954	S	8/2012	Kim et al.
D664,955	S	8/2012	Kim et al.
2005/0018396	A1	1/2005	Nakajima et al.
2005/0041378	A1	2/2005	Hamada et al.
2009/0231292	A1	9/2009	Hsieh et al.

FOREIGN PATENT DOCUMENTS

KR	3005639120000	6/2010
KR	3005639130000	6/2010
KR	3005680110000	7/2010
KR	3005804720000	11/2010
KR	3005869900000	1/2011
KR	3005942330000	4/2011
KR	3005958550000	4/2011
KR	3006013110001	6/2011
KR	3006013130000	6/2011
KR	3006013160000	6/2011
KR	3006013170000	6/2011
KR	3006052790000	7/2011
KR	3006052810000	7/2011
KR	3006052820000	7/2011
KR	3006052830000	7/2011
KR	3006059710000	7/2011
KR	3006063210000	7/2011
KR	3006064090000	7/2011
KR	3006083610000	8/2011
KR	3006083630000	8/2011
KR	3006083640000	8/2011
KR	3006083650000	8/2011
KR	3006083710000	8/2011
KR	3006083730000	8/2011
KR	3006085180000	8/2011

OTHER PUBLICATIONS

U.S. Appl. No. 29/419,063, Applicant: Kim, et al., filed May 2, 2012 entitled Notebook Computer.

U.S. Appl. No. 29/419,062, Applicant: Kim, et al., filed May 2, 2012 entitled Notebook Computer.

U.S. Appl. No. 29/419,897, Applicant: Kim, et al., filed May 2, 2012 entitled Notebook Computer.

U.S. Appl. No. 29/419,903, Applicant: Kim, et al., filed May 2, 2012 entitled Notebook Computer.

U.S. Appl. No. 29/419,914, Applicant: Park, et al., filed May 2, 2012 entitled Notebook Computer.

U.S. Appl. No. 29/419,915, Applicant: Kim, et al., filed May 2, 2012 entitled Notebook Computer.
U.S. Appl. No. 29/422,581, Applicant: Park, et al., filed May 22, 2012 entitled Notebook Computer.
U.S. Appl. No. 29/424,594, Applicant: Park, et al., filed Jun. 12, 2012 entitled Notebook Computer.
U.S. Appl. No. 29/422,779, Applicant: Tae-Yun Kim, filed May 23, 2012 entitled Notebook Computer.
U.S. Appl. No. 29/423,727, Applicant: Lee, et al., filed Jun. 4, 2012 entitled Notebook Computer.
U.S. Appl. No. 29/424,073, Applicant: Lee, et al., filed Jun. 7, 2012 entitled Notebook Computer.
U.S. Appl. No. 29/424,462, Applicant: Sang-Eun Lee, filed Jun. 12, 2012 entitled Netbook Computer.
U.S. Appl. No. 29/425,225, Applicant: Jung, et al., filed Jun. 20, 2012 entitled Portable Computer.
U.S. Appl. No. 29/425,446, Applicant: Kim, et al., filed Jun. 22, 2012 entitled Portable Computer.
U.S. Appl. No. 29/425,828, Applicant: Kim, et al., filed Jun. 27, 2012 entitled Portable Computer.
U.S. Appl. No. 29/425,836, Applicant: Park, et al., filed Jun. 27, 2012 entitled Portable Computer.
U.S. Appl. No. 29/423,726, Applicant: Lee, et al., filed Jun. 4, 2012 entitled Notebook Computer.
U.S. Appl. No. 29/424,453, Applicant: Lee, et al., filed Jun. 12, 2012 entitled Notebook Computer.
U.S. Appl. No. 29/403,114, Applicant: Fukusawa, et al., filed Sep. 30, 2011 entitled Notebook Computer.

* cited by examiner

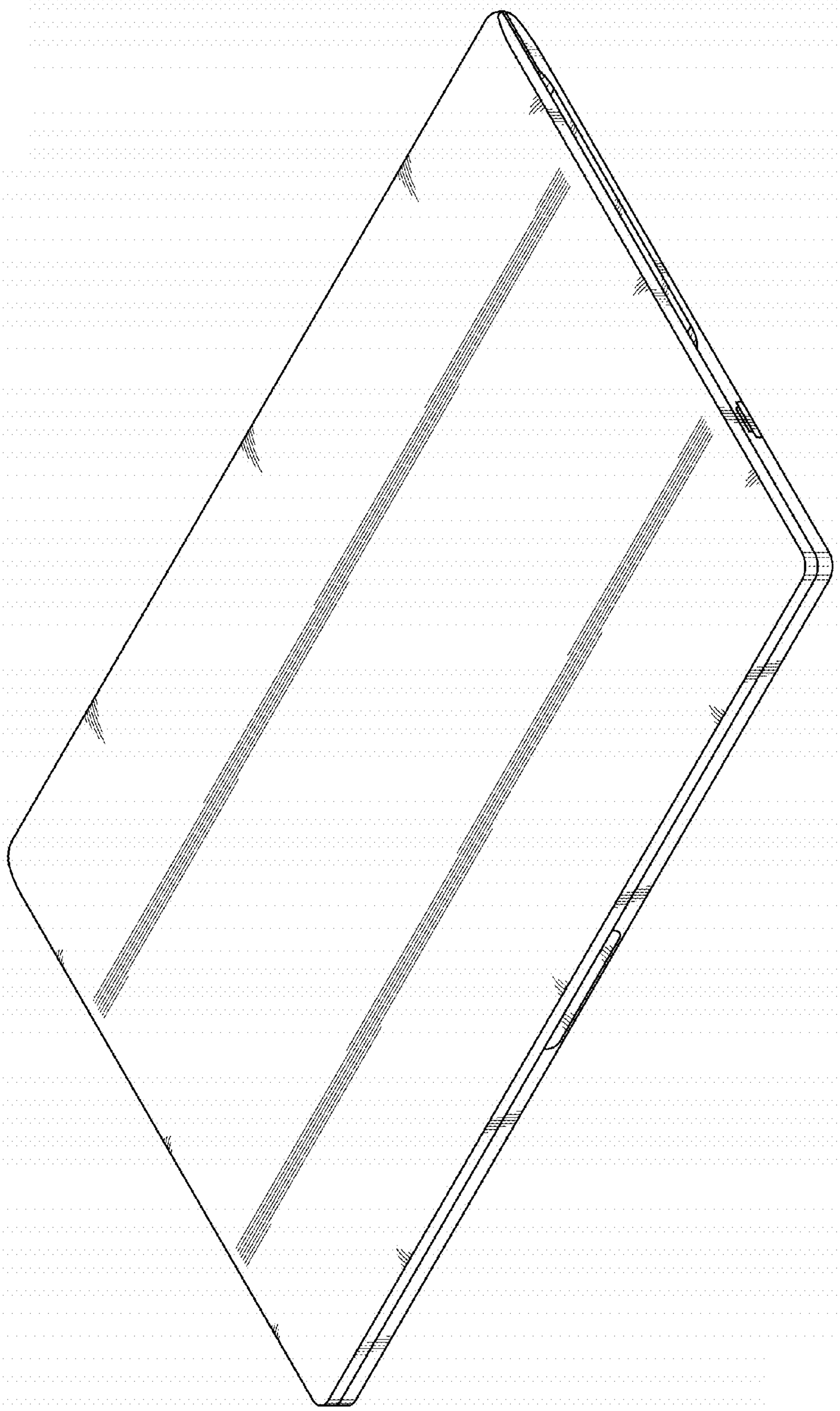

FIG.1

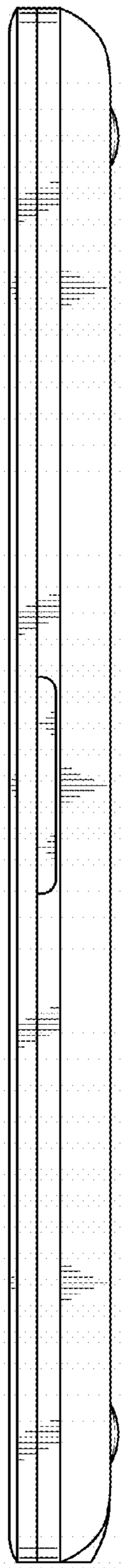

FIG.2

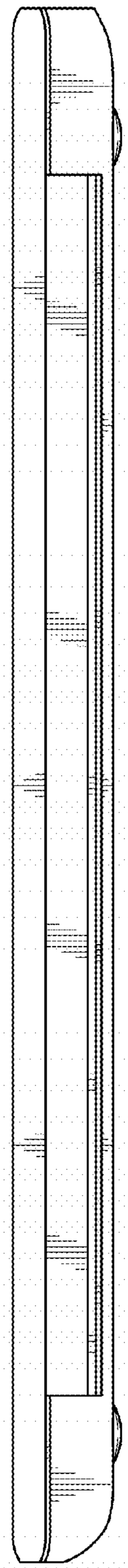

FIG.3

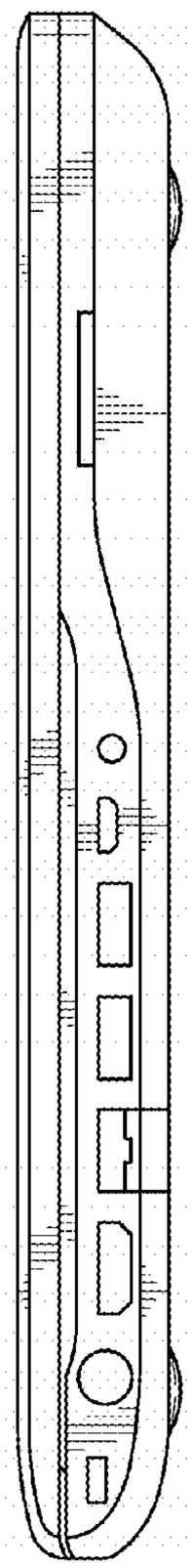

FIG.4

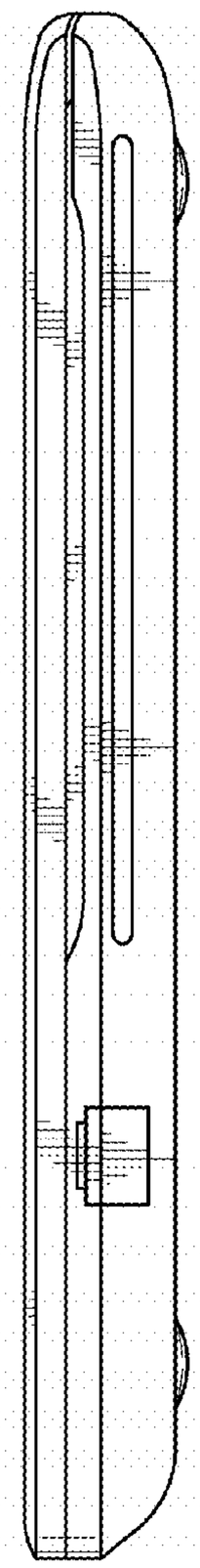

FIG.5

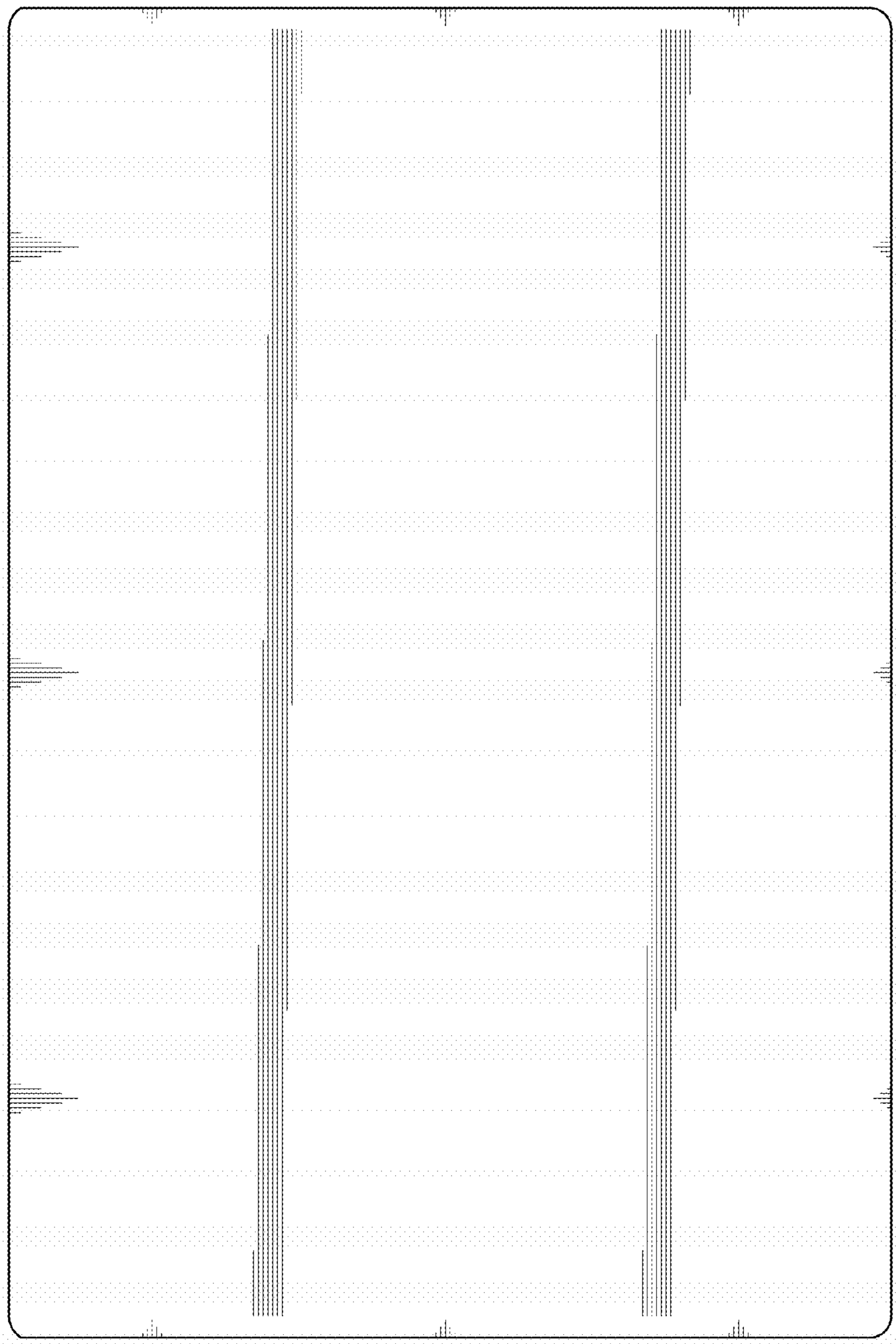

FIG.6

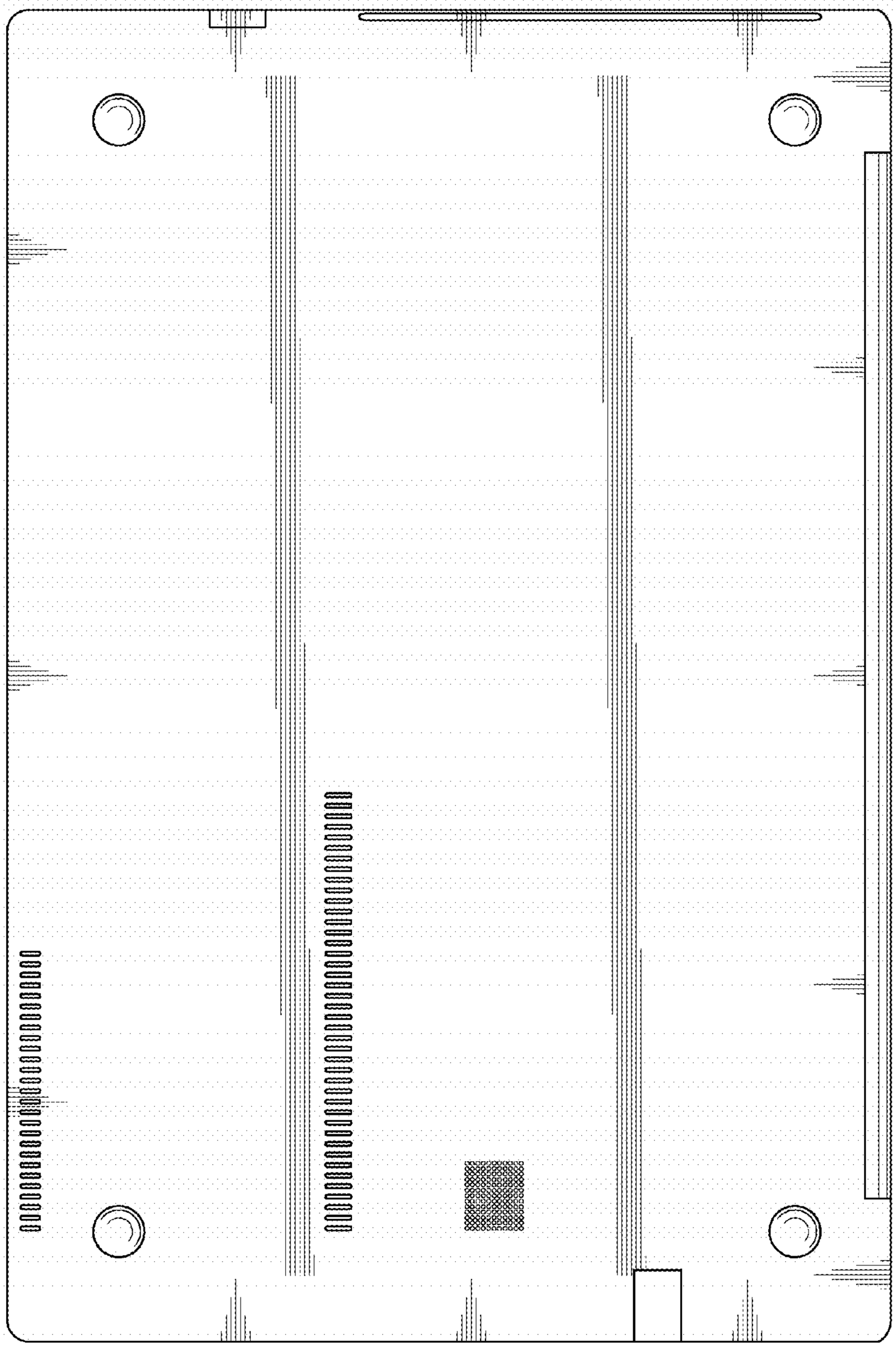

FIG.7