US00D688779S

(12) **United States Design Patent**
Wulf et al.

(10) **Patent No.: US D688,779 S**
(45) **Date of Patent: ** Aug. 27, 2013**

(54) **NECK AND VENT CARRIER OF A HOUSING FOR A FREE-STANDING EVAPORATIVE COOLING UNIT**

(71) Applicant: **Port-A-Cool, LLC**, Center, TX (US)

(72) Inventors: **Benjamin Leon Wulf**, Center, TX (US); **Kerry Lyman Shumway**, Nacogdoches, TX (US); **Yun Seok Kim**, Chandler, AZ (US)

(73) Assignee: **Port-A-Cool, LLC**, Center, TX (US)

(**) Term: **14 Years**

(21) Appl. No.: **29/434,972**

(22) Filed: **Oct. 18, 2012**

(51) **LOC (9) Cl.** **23-04**

(52) **U.S. Cl.**
USPC **D23/333**

(58) **Field of Classification Search**
USPC D23/314, 317, 332, 333, 351, 352, D23/354, 336; 312/236; 62/259.1, 259.3, 62/259.4, 262–263, 304, 401, 515–516, 261, 62/419–420, 331, 314; 454/330–331, 349–350, 454/354; 431/123, 253
See application file for complete search history.

(56) **References Cited**

U.S. PATENT DOCUMENTS

2,207,956	A *	7/1940	Timms et al.	62/261
2,210,458	A	8/1940	Keilholtz	
D157,824	S *	3/1950	Wright	D23/333
5,350,337	A	9/1994	Kondo et al.	
5,598,719	A	2/1997	Jones et al.	
D382,951	S *	8/1997	Deines et al.	D23/336
D419,230	S *	1/2000	Ciccone	D23/333
6,422,232	B1	7/2002	Ashton et al.	
D486,211	S *	2/2004	Chan et al.	D23/332
7,086,396	B2	8/2006	Waters	
D532,501	S *	11/2006	Giovino	D23/332
7,296,785	B2	11/2007	Hayden	
D641,845	S *	7/2011	Breit et al.	D23/333
2005/0247074	A1	11/2005	Ellicott	
2008/0006263	A1	1/2008	Seichei et al.	
2009/0000325	A1	1/2009	Johnson	

OTHER PUBLICATIONS

"PC ESAC Evaporative Coolers", Munters 2007, 2 pages.
Fire Sense, http://www.firesense.com.
Fire Sense, http://www.firesense.net.
Patio Comfort Heaters, http://www.patiocomfortheaters.com.
Sunglo Patio Heater, http://www.sunglopatioheater.com.
Dayva, http://www.dayva.com/heaters/.

* cited by examiner

Primary Examiner — Brian N Vinson
(74) *Attorney, Agent, or Firm* — John Wilson Jones; Jones & Smith, LLP

(57) **CLAIM**

The ornamental design for a neck and vent carrier of a housing for a free-standing evaporative cooling unit, as shown and described.

DESCRIPTION

FIG. **1** is a front elevational view of a neck and vent carrier of a housing for a free-standing evaporative cooling unit showing our new design;
FIG. **2** is a right side elevational view thereof;
FIG. **3** is a left side elevational view thereof;
FIG. **4** is a rear elevational view thereof;
FIG. **5** is a top, front and right side perspective view thereof; and,
FIG. **6** is a bottom, rear, and left side perspective view thereof.
The broken-line disclosure in the views is understood to represent portions of the housing which are not part of the claimed design. Where broken-lines abut claimed surfaces, which are shown with surface shading, those broken-lines are understood to represent unclaimed boundaries or edges.

1 Claim, 6 Drawing Sheets

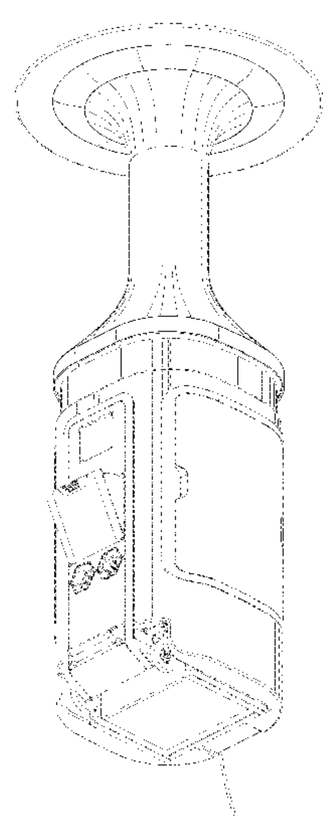

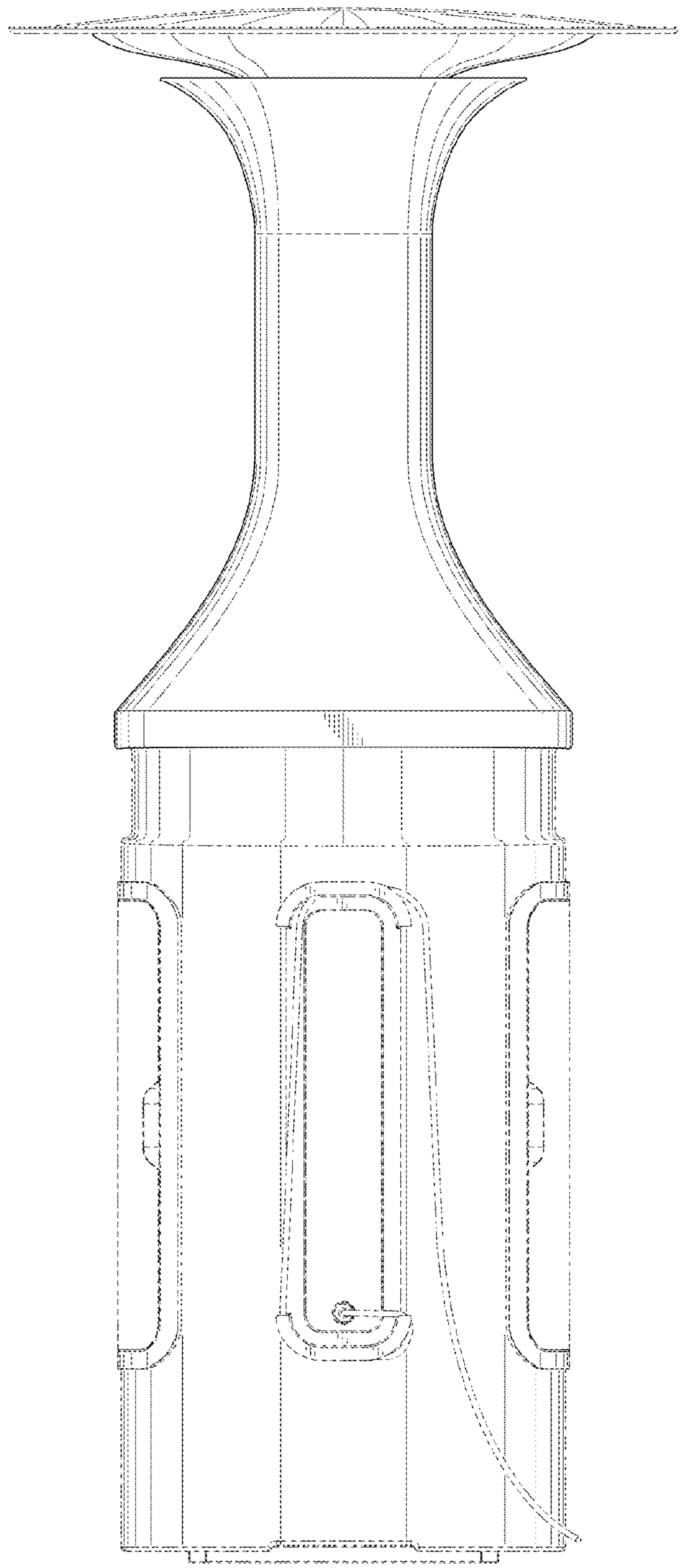

FIG. 1

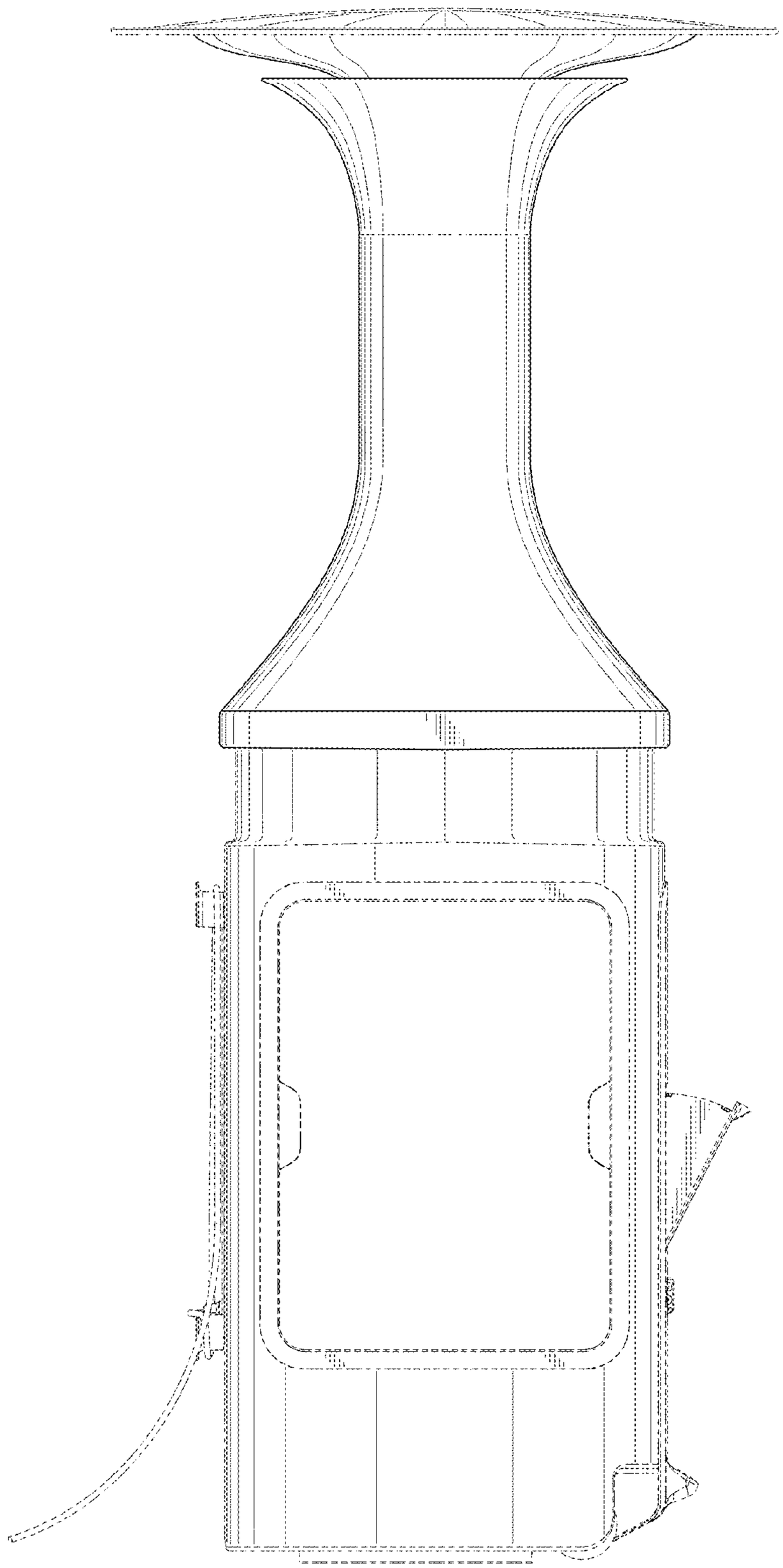

FIG. 2

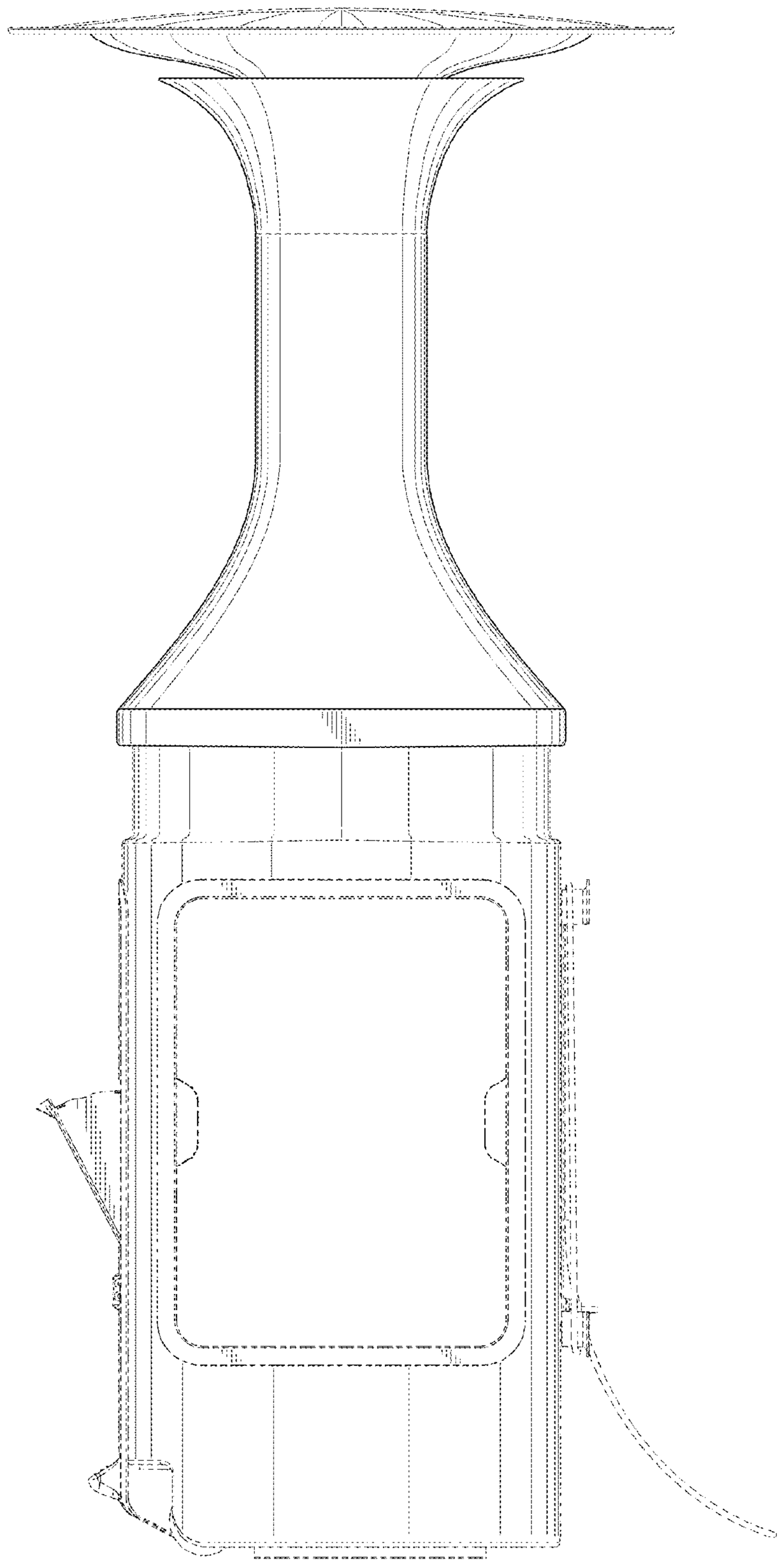

FIG. 3

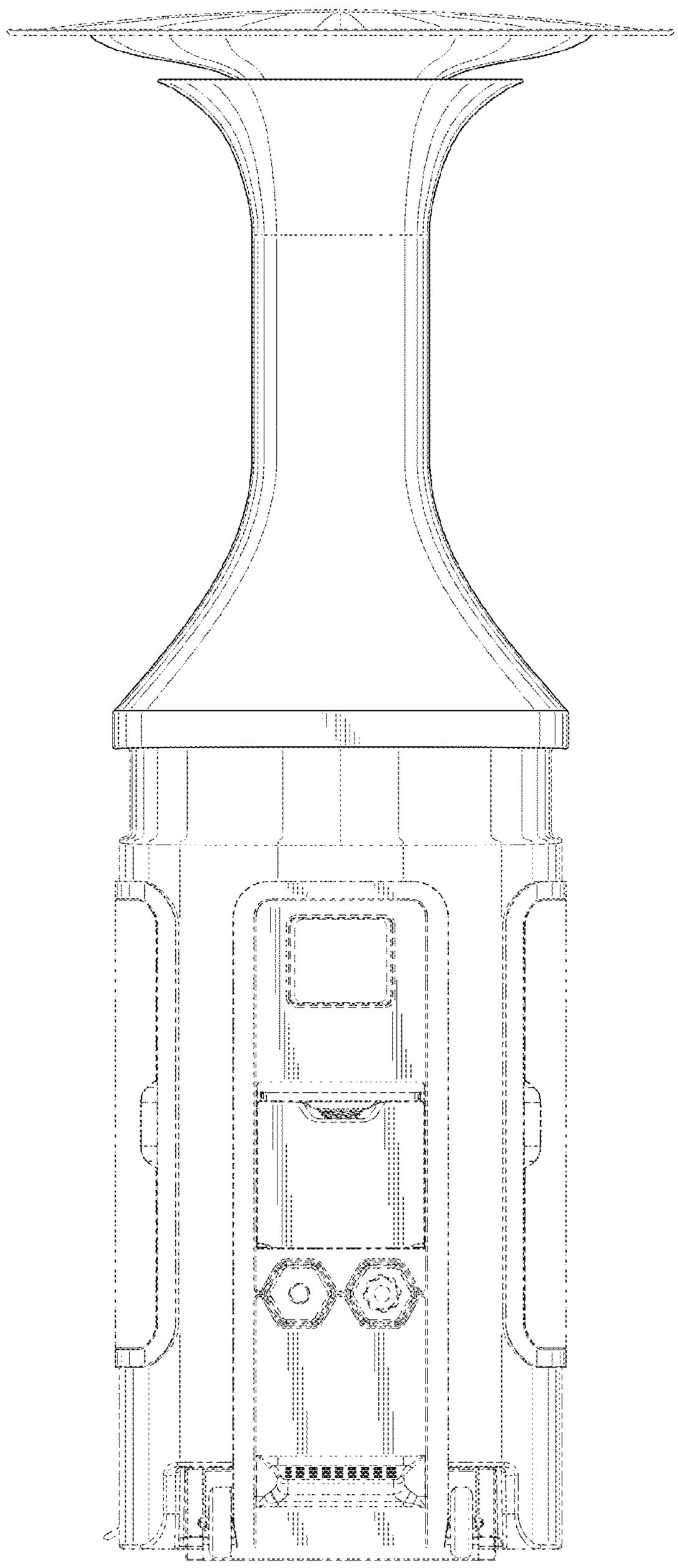

FIG. 4

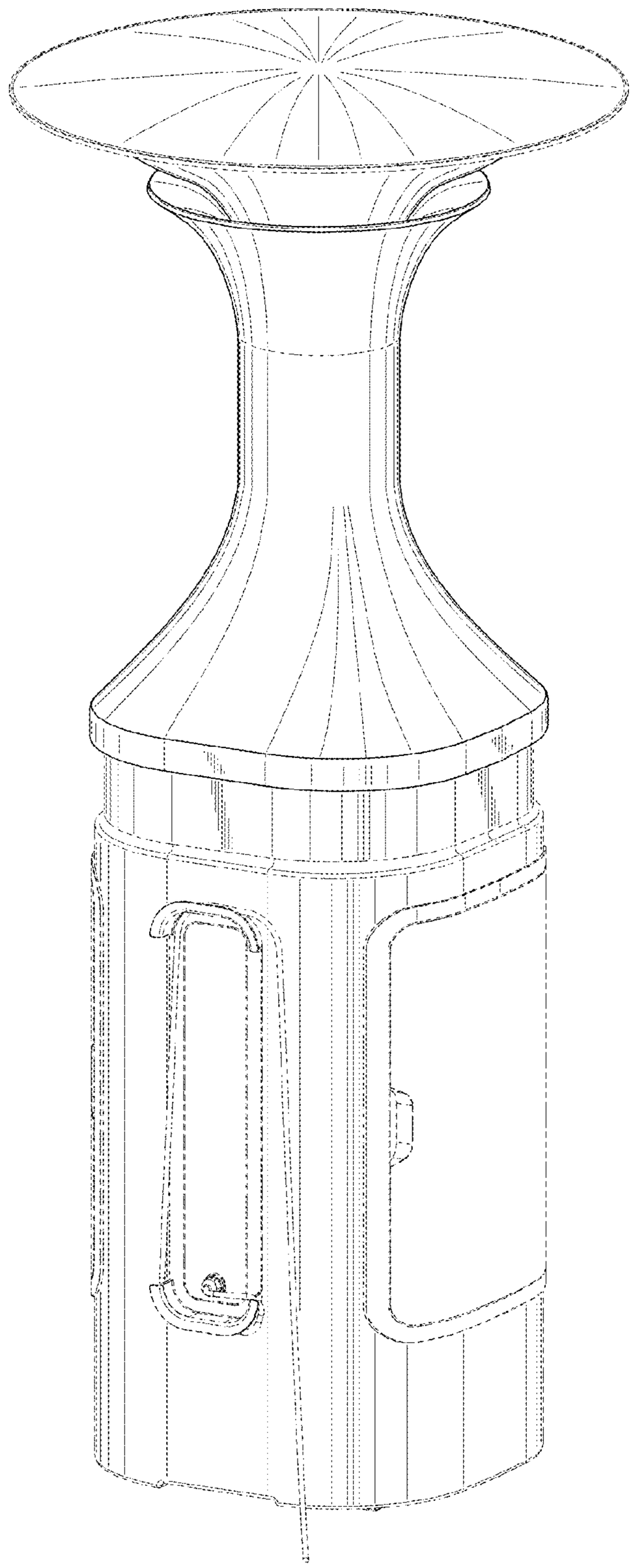

FIG. 5

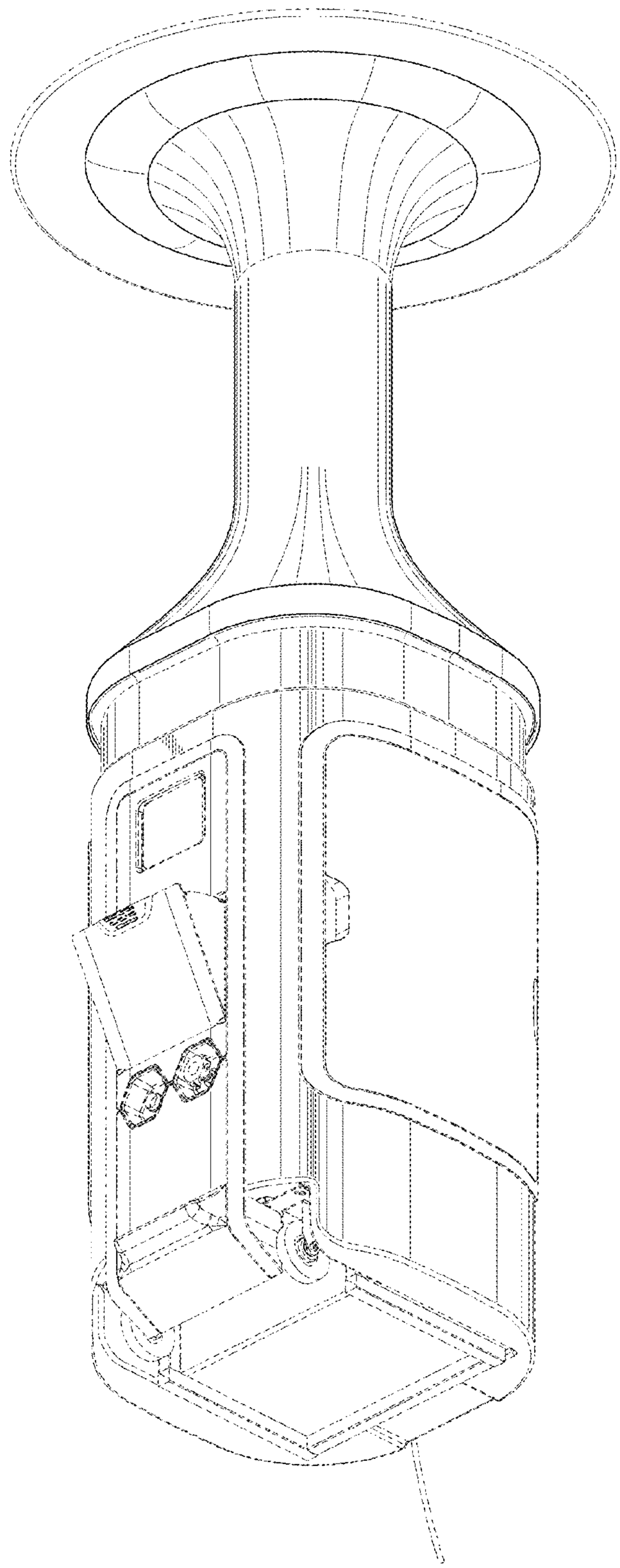

FIG. 6