US00D686913S

(12) United States Design Patent

Kirk et al.

(10) Patent No.: US D686,913 S
(45) Date of Patent: ** *Jul. 30, 2013

(54) **PACKAGING FOR DOUGH PRODUCT**

(75) Inventors: **David A. Kirk**, Coon Rapids, MN (US); **Craig A. Dowd**, Eagan, MN (US); **Thomas M. Hockenberry**, Minneapolis, MN (US)

(73) Assignee: **General Mills, Inc.**, Minneapolis, MN (US)

(*) Notice: This patent is subject to a terminal disclaimer.

(**) Term: **14 Years**

(21) Appl. No.: **29/428,286**

(22) Filed: **Jul. 27, 2012**

Related U.S. Application Data

(63) Continuation of application No. 29/332,935, filed on Feb. 27, 2009, now Pat. No. Des. 665,250, and a continuation of application No. 29/332,936, filed on Feb. 27, 2009, now Pat. No. Des. 662,251, said application No. 29/332,935 is a continuation of application No. 29/297,836, filed on Nov. 20, 2007, now Pat. No. Des. 590,246, said application No. 29/332,936 is a continuation of application No. 29/297,836, filed on Nov. 20, 2007, now Pat. No. Des. 590,246, which is a continuation of application No. 29/204,662, filed on Apr. 30, 2004, now Pat. No. Des. 560,490.

(51) **LOC (9) Cl.** **09-03**

(52) **U.S. Cl.**
USPC **D9/416**; D9/418; D9/425; D9/737

(58) **Field of Classification Search**
USPC ..... D9/416, 418, 737, 730, 732, 733, D9/734, 756, 757, 759, 761, 424, 425, 430, D9/432, 414; 206/223, 438, 484, 499, 525, 206/526, 528, 532, 820, 830; 220/507, 62.13, 220/657, 659, DIG. 12; 426/128; 229/406, 229/905, 906, 245, 927, 125.015, 123.1, 229/123.2; 428/515; 383/109
See application file for complete search history.

(56) **References Cited**

U.S. PATENT DOCUMENTS

1,816,542	A	7/1931	Mellin
2,951,765	A	9/1960	Robson
3,144,343	A	8/1964	Fritsche
D199,200	S	9/1964	Fritsche et al.
3,202,272	A	8/1965	Hertzog
3,278,109	A	10/1966	Salway
D211,448	S	6/1968	Seiferth et al.
D211,449	S	6/1968	Seiferth et al.
3,476,282	A	11/1969	Monaco et al.

(Continued)

OTHER PUBLICATIONS

Buitoni, "Package Example—Buitoni Three Cheese Tortellini".

(Continued)

Primary Examiner — Mark Goodwin
(74) *Attorney, Agent, or Firm* — Aleya Champlin; John L. Crimmins

(57) **CLAIM**

We claim the ornamental design for packaging for dough product, as shown and described.

DESCRIPTION

FIG. **1** is a top plan view of a packaging for dough product showing our new design; and,
FIG. **2** is an end view thereof, all other end views being the same.
The broken line showing of a representative dough product is included for the purpose of illustrating environmental structure only and forms no part of the claimed design.

1 Claim, 1 Drawing Sheet

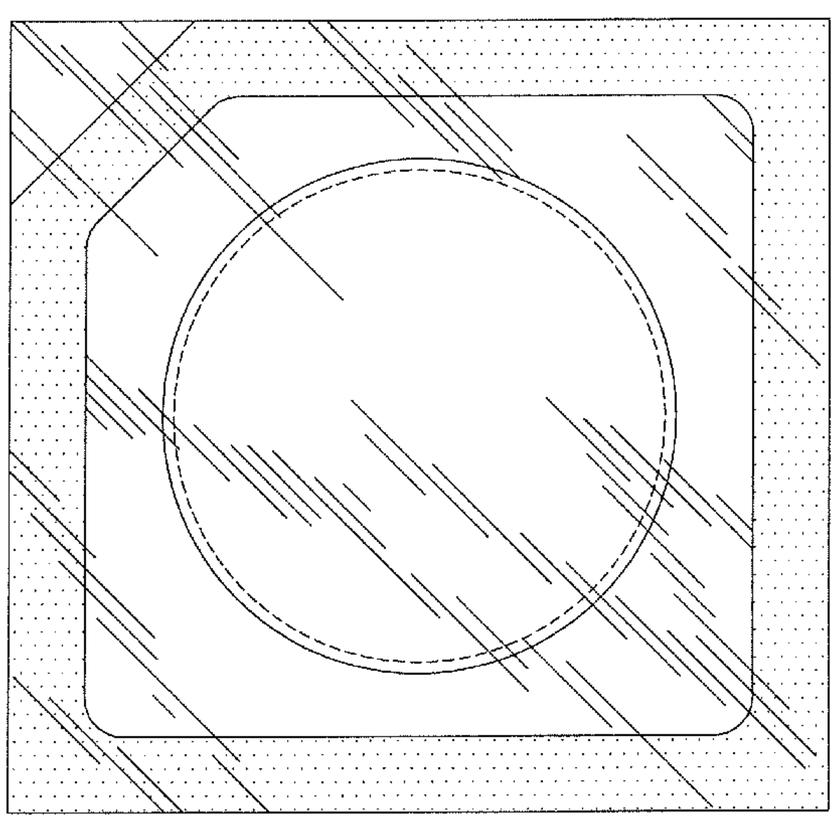

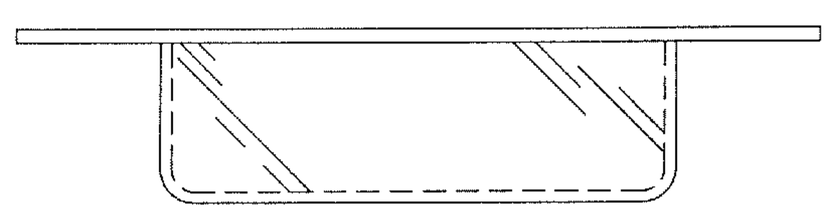

U.S. PATENT DOCUMENTS

T869023	I4	12/1969	Henry	
3,530,917	A	9/1970	Donovan	
3,545,934	A	12/1970	Johnston et al.	
3,577,671	A	5/1971	Woollett	
3,586,162	A	6/1971	Townsend	
3,605,374	A	9/1971	Mueller et al.	
D223,189	S	3/1972	Dittman	
3,765,595	A	10/1973	Bernhardt	
3,809,221	A	5/1974	Compere	
D235,246	S	6/1975	Evans et al.	
3,942,640	A	3/1976	Hellstrom	
3,983,999	A	10/1976	Morton	
4,096,945	A	6/1978	Melton et al.	
4,197,947	A	4/1980	Zaidi	
4,206,844	A	6/1980	Thukamoto et al.	
D262,095	S	12/1981	Takahashi	
4,342,395	A	8/1982	Brown	
4,355,755	A	10/1982	Faller	
4,382,513	A	5/1983	Schirmer et al.	
D273,765	S	5/1984	Cillario	
4,577,757	A	3/1986	Hustad et al.	
4,656,068	A	4/1987	Raines	
4,673,085	A	6/1987	Badouard et al.	
4,834,247	A	5/1989	Oshima et al.	
4,836,380	A	6/1989	Walter et al.	
D339,522	S	9/1993	Zoss	
D349,456	S	8/1994	Wilson	
5,366,744	A	11/1994	Drummond et al.	
5,388,757	A	2/1995	Lorenzen	
D368,028	S	3/1996	Baker	
5,503,858	A	4/1996	Reskow	
5,540,334	A	7/1996	Haas et al.	
D375,680	S	11/1996	Liebermann	
D375,681	S	11/1996	Liebermann	
D395,232	S	6/1998	Bryan, III et al.	
D395,233	S	6/1998	Bryan, III et al.	
5,783,273	A	7/1998	Yamamoto et al.	
D408,280	S	4/1999	Manley et al.	
D416,483	S	11/1999	Manley et al.	
D417,146	S	11/1999	St. Pierre et al.	
D421,900	S	3/2000	Eneroth et al.	
6,059,112	A	5/2000	Dykstra et al.	
D455,071	S	4/2002	Ruben	
D459,222	S	6/2002	Mello et al.	
D479,128	S	9/2003	Jowett	
D485,942	S	1/2004	McLeish	
D499,642	S	12/2004	Karim	
D510,263	S	10/2005	Isono et al.	
D543,866	S	6/2007	Mikkelsen	
D544,370	S	6/2007	Tuccillo	
7,247,329	B2 *	7/2007	Mattisson	426/108
D560,490	S *	1/2008	Kirk et al.	D9/732
7,322,473	B2 *	1/2008	Fux	206/459.1
D561,579	S *	2/2008	Aronson et al.	D9/415
D579,768	S *	11/2008	Kirk et al.	D9/416
D584,141	S *	1/2009	Smith et al.	D9/425
D584,944	S *	1/2009	Kirk et al.	D9/416
D590,246	S *	4/2009	Kirk et al.	D9/732
D610,464	S *	2/2010	Domingues et al.	D9/702
D610,465	S *	2/2010	Domingues et al.	D9/702
D619,888	S *	7/2010	Domingues et al.	D9/416
D621,278	S *	8/2010	Domingues et al.	D9/702
D660,142	S *	5/2012	Kirk et al.	D9/416
D665,250	S *	8/2012	Kirk et al.	D9/416
D665,251	S *	8/2012	Kirk et al.	D9/416
2002/0172834	A1	11/2002	Rivett et al.	
2003/0141218	A1	7/2003	Stephens et al.	
2006/0263494	A1	11/2006	Geng et al.	

OTHER PUBLICATIONS

General Mills, Inc., "Package—Ready to Bake!® Sugar Cookies".

* cited by examiner

FIG. 1

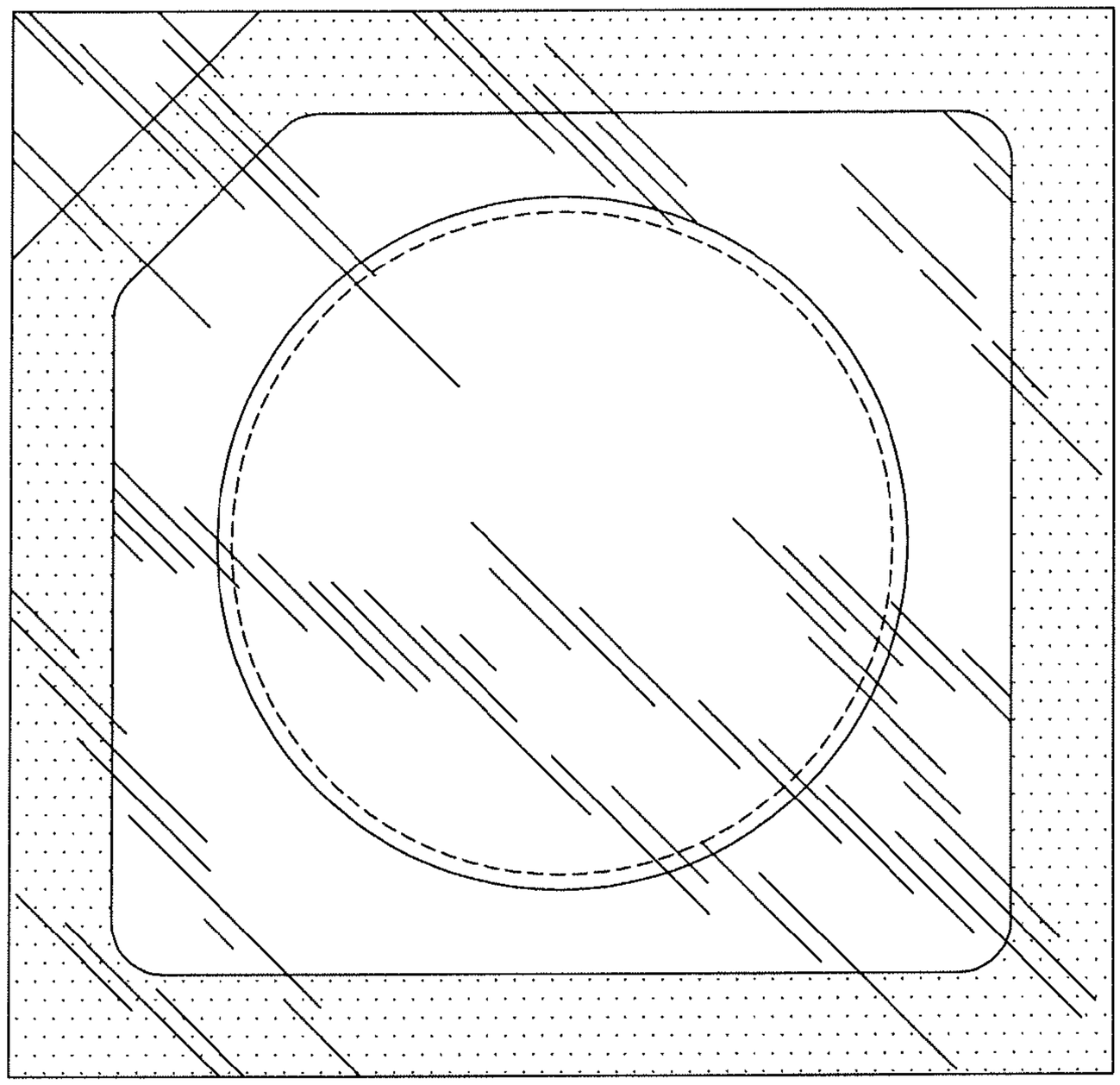
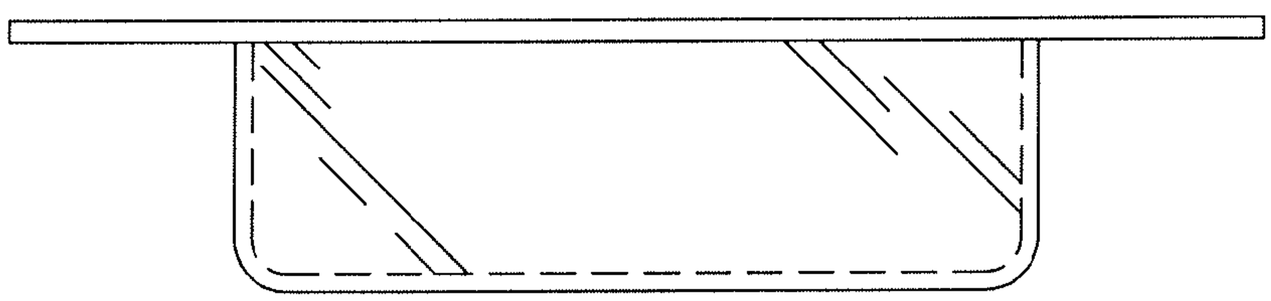
FIG. 2