US00D685155S

(12) United States Design Patent

Budde et al.

(10) Patent No.: US D685,155 S
(45) Date of Patent: ** Jun. 25, 2013

(54) **FINANCIAL TRANSACTION MACHINE**

(75) Inventors: **William Budde**, Dublin, OH (US); **Giancarlo Miranda**, Columbus, OH (US); **Joseph Bradley Nolan**, New Albany, OH (US); **Katherine Dill**, San Francisco, CA (US); **Alison Maiorano**, San Francisco, CA (US); **William Koehler**, San Francisco, CA (US); **Anthony Meredith**, San Francisco, CA (US); **Jonathan Rowell**, San Francisco, CA (US); **Howard Nuk**, San Francisco, CA (US); **David Scott**, Belmont, CA (US); **Tanya Khakbaz**, San Francisco, CA (US); **Charles Ambler**, San Francisco, CA (US); **Hanna Wickholm**, San Francisco, CA (US)

(73) Assignee: **JPMorgan Chase Bank, N.A.**, New York, NY (US)

(**) Term: **14 Years**

(21) Appl. No.: **29/405,268**

(22) Filed: **Oct. 31, 2011**

(51) **LOC (9) Cl.** **20-01**

(52) **U.S. Cl.**
USPC **D99/28**

(58) **Field of Classification Search**
USPC .... D99/28, 34, 35, 36, 43, 99; D14/300–303, D14/900–902; D18/3.1–3.3, 4.1–4.6, 12.1–12.3; 206/0.8, 0.81, 0.815, 0.82, 0.83, 0.84; 101/66; 109/1 R, 1 V, 2, 23, 24.1, 25, 58, 58.5, 66; 446/8–13; 705/16, 17, 18, 42, 43, 44, 45
See application file for complete search history.

(56) **References Cited**

U.S. PATENT DOCUMENTS

D282,305	S	1/1986	Kusenberg
4,617,457	A	10/1986	Granzow et al.
D289,215	S	4/1987	Prinzhorn

(Continued)

Primary Examiner — Elizabeth J Oswecki
(74) *Attorney, Agent, or Firm* — Hunton & Williams LLP

(57) **CLAIM**

We claim the ornamental design for a financial transaction machine, as shown and described.

DESCRIPTION

FIG. **1** is a front perspective view of a first embodiment of a financial transaction machine showing our new design;
FIG. **2** is a front elevational view of FIG. **1**;
FIG. **3** is a back elevational view of FIG. **1**;
FIG. **4** is a left side elevational view of FIG. **1**;
FIG. **5** is a right side elevational view of FIG. **1**;
FIG. **6** is a top plan view of FIG. **1**;
FIG. **7** is a bottom plan view of FIG. **1**;
FIG. **8** is a front perspective view of a financial transaction machine in FIG. **1** in a used condition with unclaimed environmental structure;
FIG. **9** is a front perspective view of a second embodiment of a financial transaction machine showing our new design;
FIG. **10** is a front elevational view of FIG. **9**;
FIG. **11** is a back elevational view of FIG. **9**;
FIG. **12** is a left side elevational view of FIG. **9**;
FIG. **13** is a right side elevational view of FIG. **9**;
FIG. **14** is a top plan view of FIG. **9**;
FIG. **15** is a bottom plan view of FIG. **9**; and,
FIG. **16** is a front perspective view of a financial transaction machine in FIG. **9** in a used condition with unclaimed environmental structure.
The broken lines in the drawings illustrate environmental structure on the article and form no part of the claimed design.

1 Claim, 14 Drawing Sheets

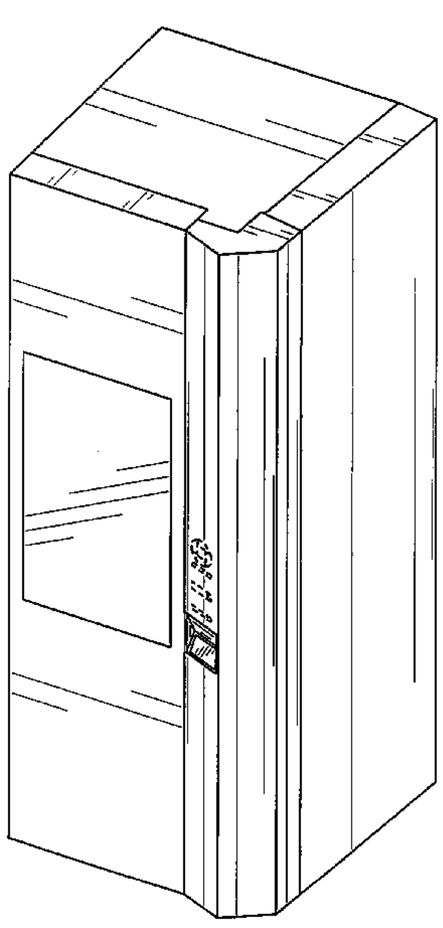

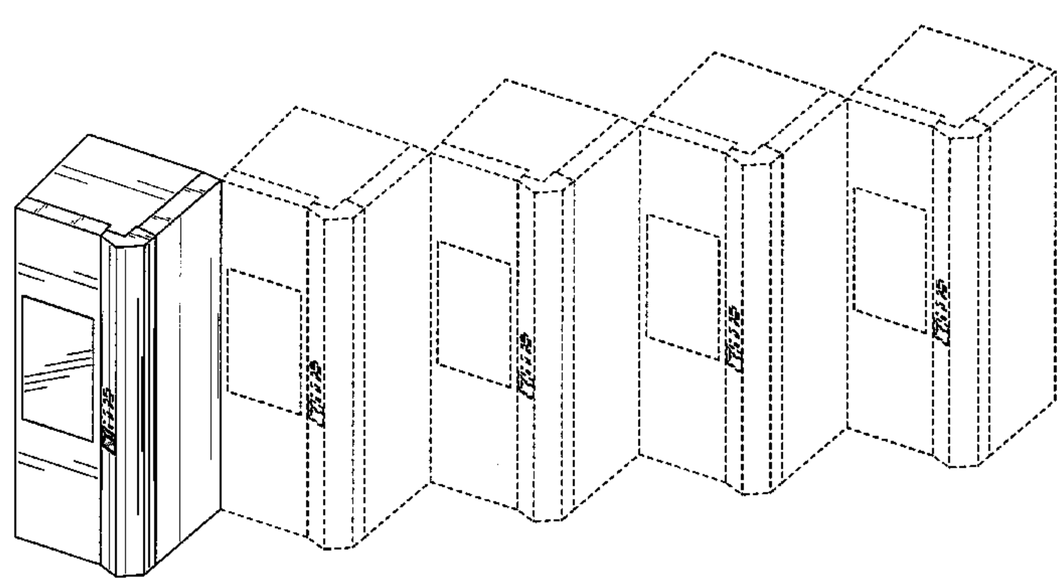

U.S. PATENT DOCUMENTS

D293,150	S		12/1987	Prinzhorn
D308,670	S	*	6/1990	Hanson et al. D14/311
D316,707	S	*	5/1991	Allgeier D14/420
5,025,139	A		6/1991	Halliburton, Jr.
D360,734	S		7/1995	Hall
D360,735	S		7/1995	Hall
D360,739	S		7/1995	Hall
5,482,139	A		1/1996	Rivalto
5,513,117	A		4/1996	Small
5,526,615	A		6/1996	Kaizu et al.
D375,607	S		11/1996	Hall
5,619,558	A		4/1997	Jheeta
5,705,798	A		1/1998	Tarbox
5,721,781	A		2/1998	Deo et al.
5,897,625	A		4/1999	Gustin et al.
5,915,246	A		6/1999	Patterson et al.
6,006,988	A		12/1999	Behrmann et al.
6,045,039	A		4/2000	Stinson et al.
D425,875	S	*	5/2000	Wilson D14/307
D432,755	S	*	10/2000	Perkitny et al. D99/34
6,149,046	A		11/2000	Ho et al.
6,536,663	B1		3/2003	Lozier et al.
6,554,184	B1		4/2003	Amos
6,554,185	B1		4/2003	Montross et al.
6,796,490	B1		9/2004	Drummond et al.
6,874,612	B1		4/2005	Uland
7,039,600	B1		5/2006	Meek et al.
7,379,896	B1		5/2008	Meek et al.
D585,943	S	*	2/2009	Pymm et al. D20/10
D639,800	S	*	6/2011	Magruder D14/307
D646,269	S	*	10/2011	Crick et al. D14/307
D665,555	S	*	8/2012	Lee et al. D99/28
2002/0124271	A1	*	9/2002	Herrmann et al. 725/151
2002/0133461	A1		9/2002	Ramachandran
2003/0040959	A1		2/2003	Fei et al.

* cited by examiner

FIG. 1

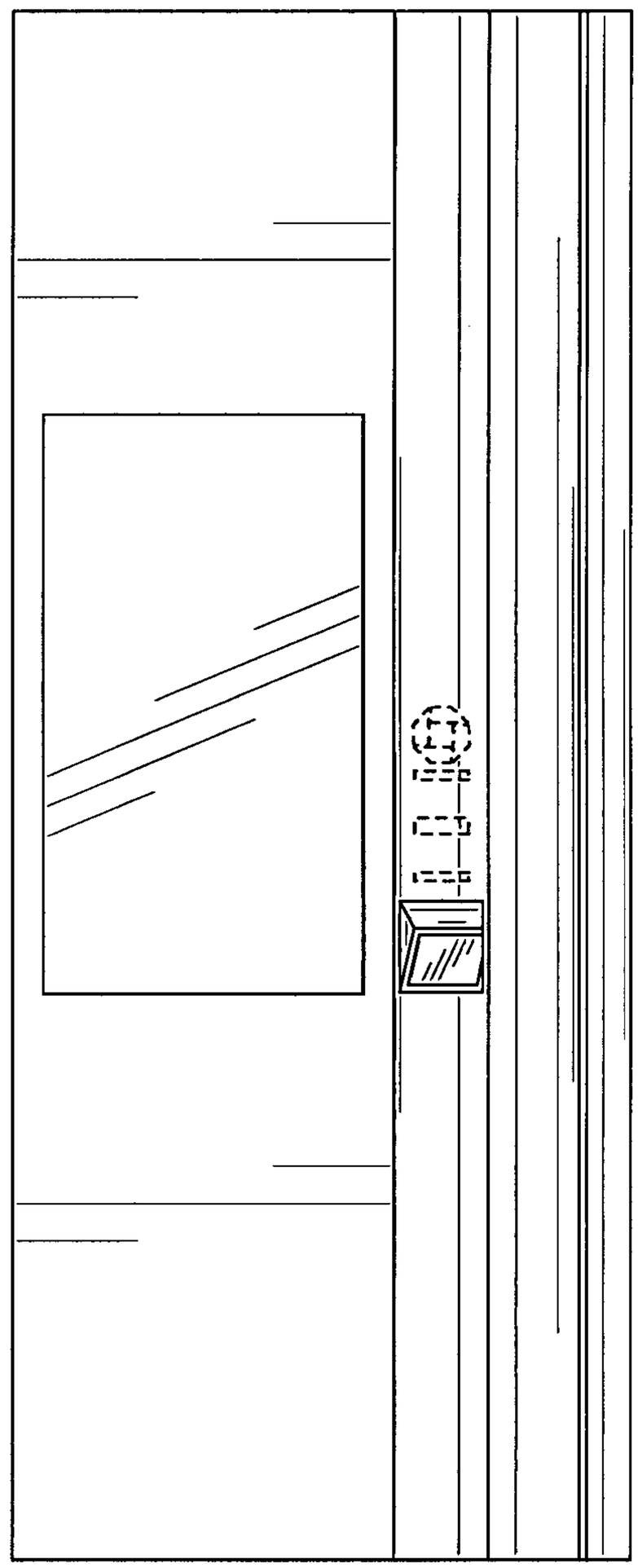

FIG. 2

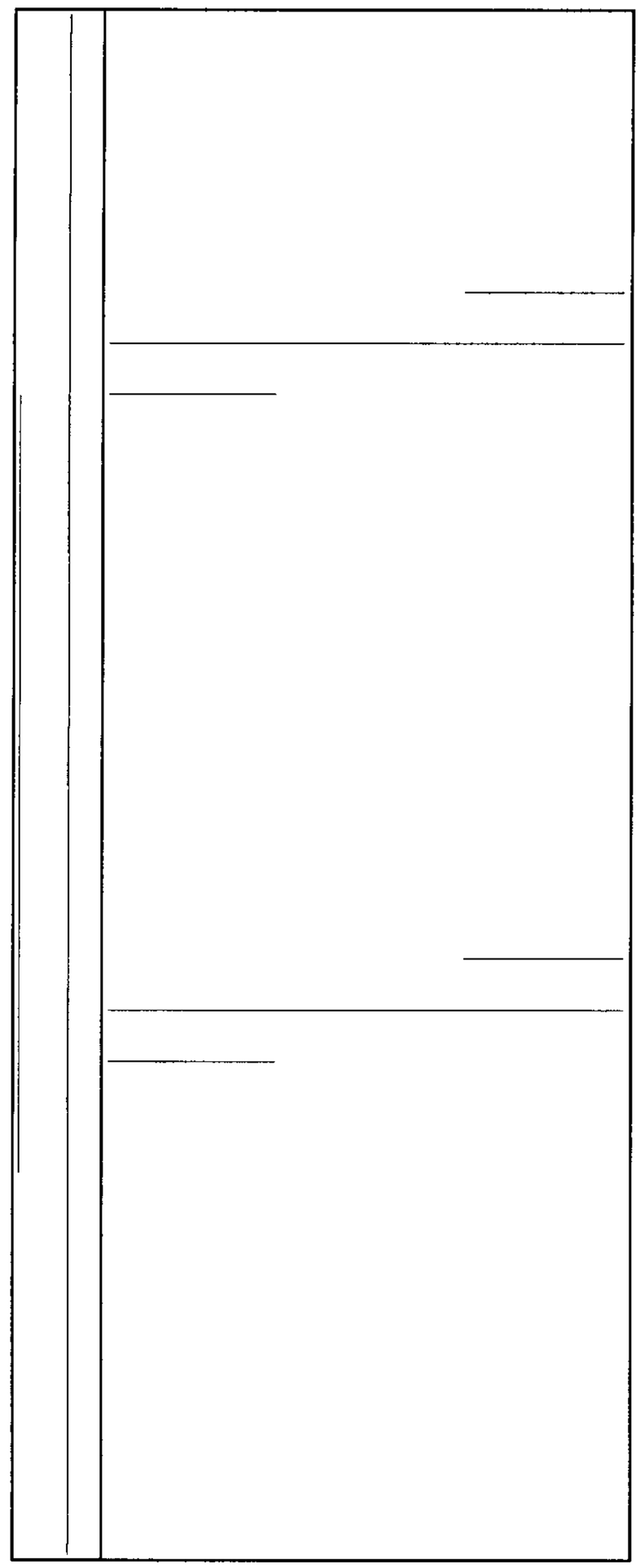

FIG. 3

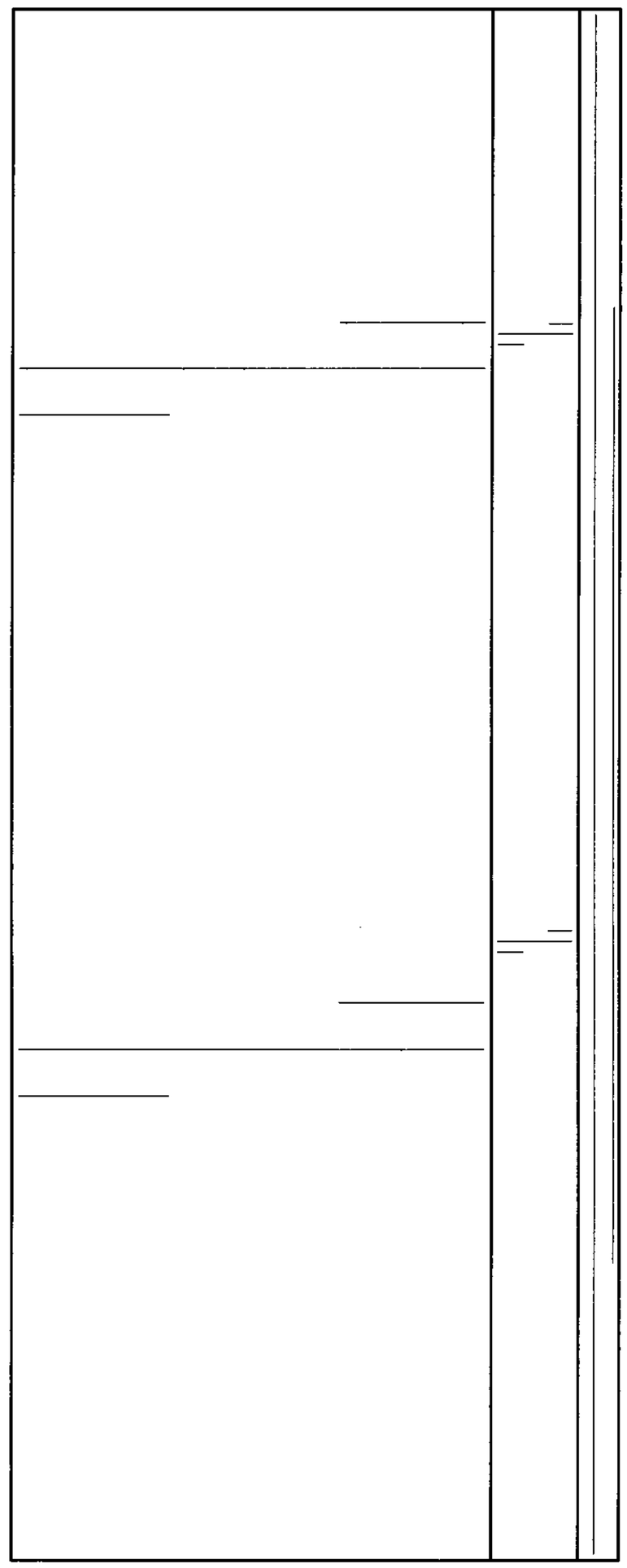

FIG. 4

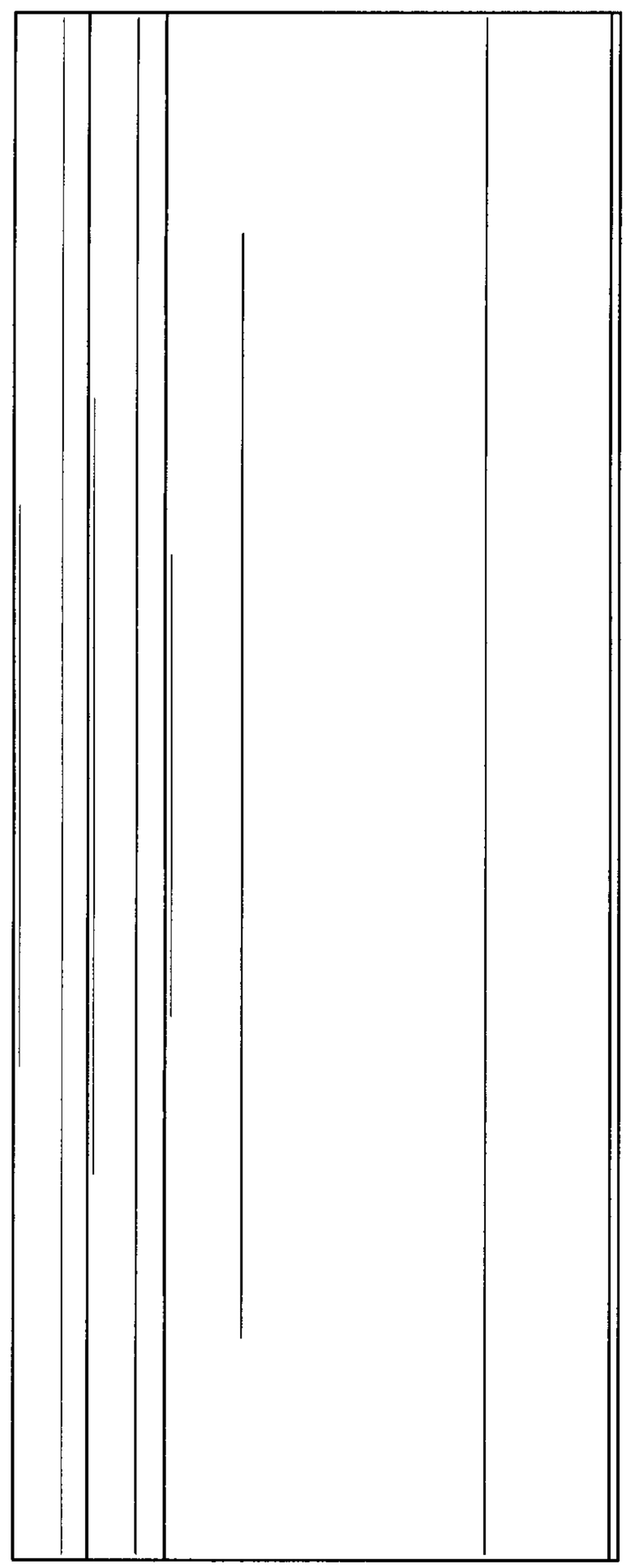

FIG. 5

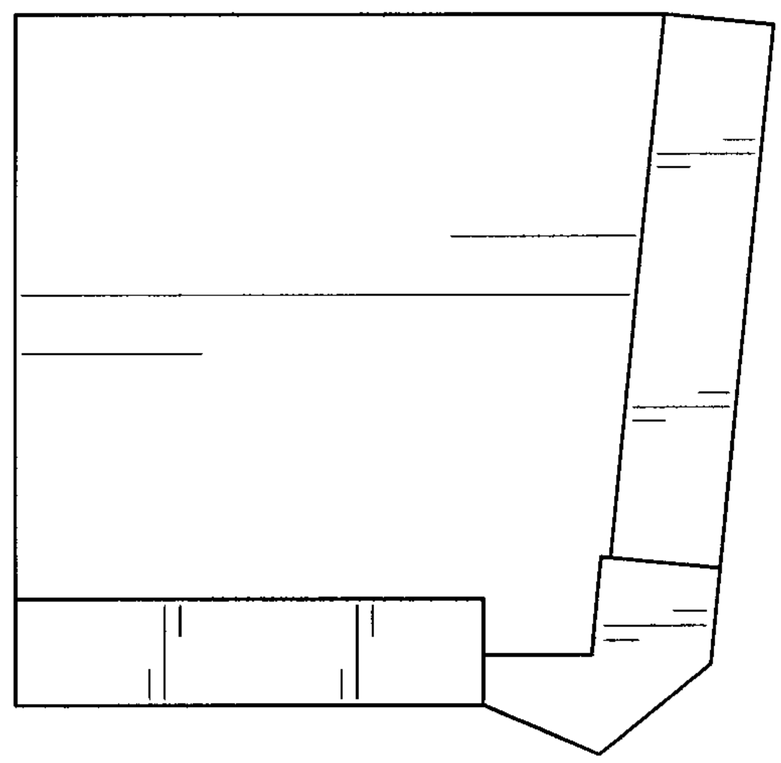

FIG. 6

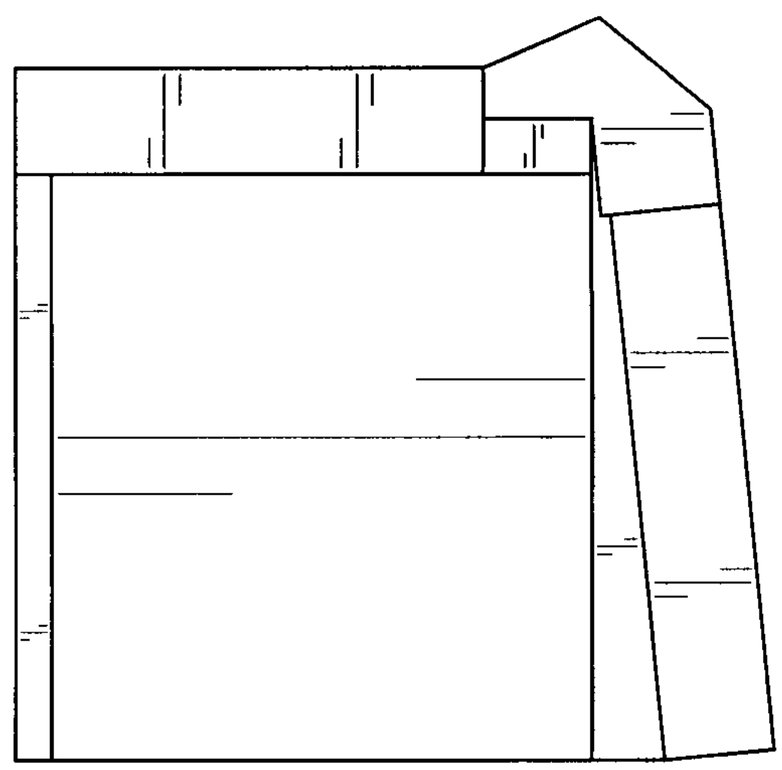

FIG. 7

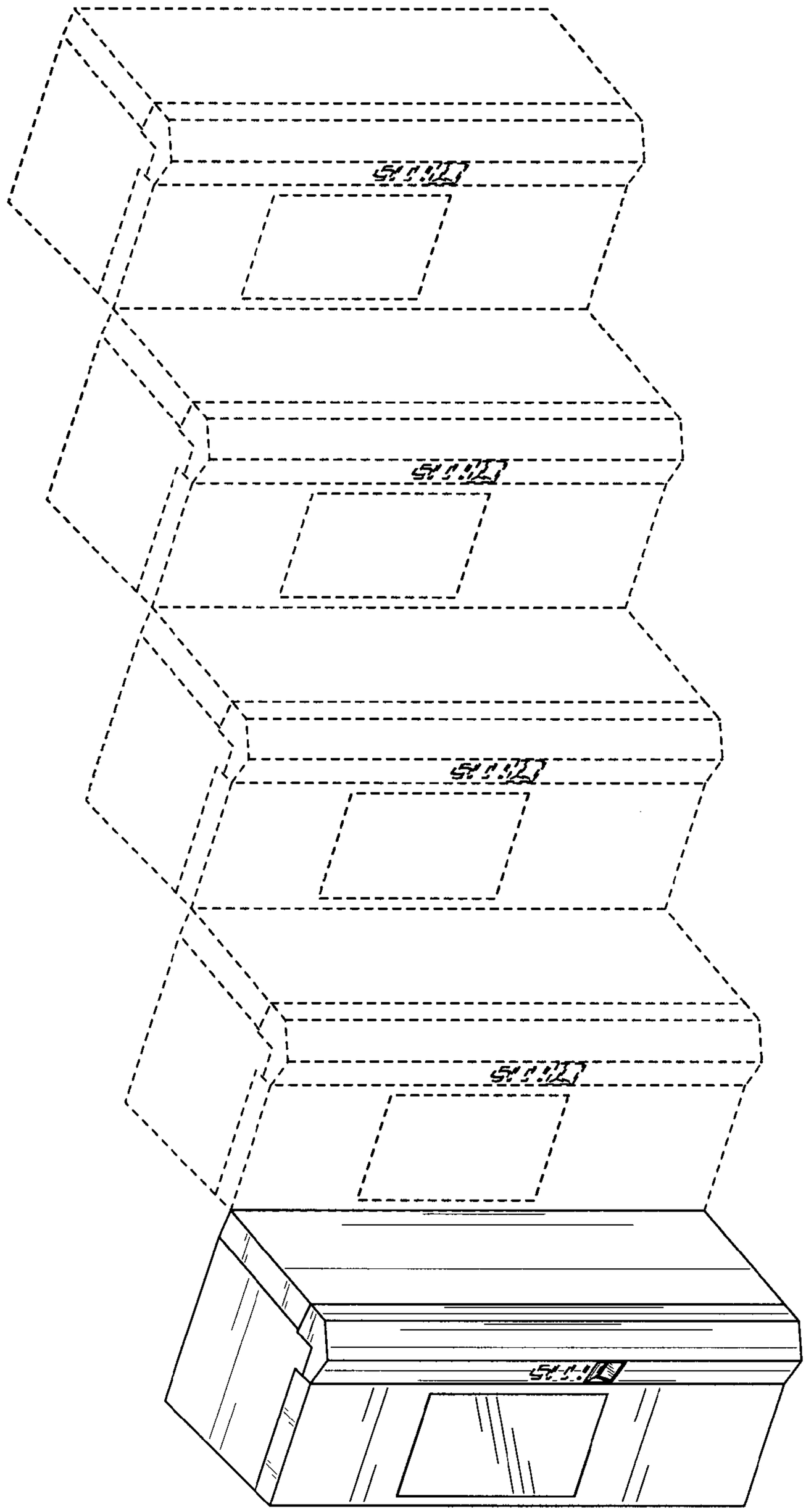

FIG. 8

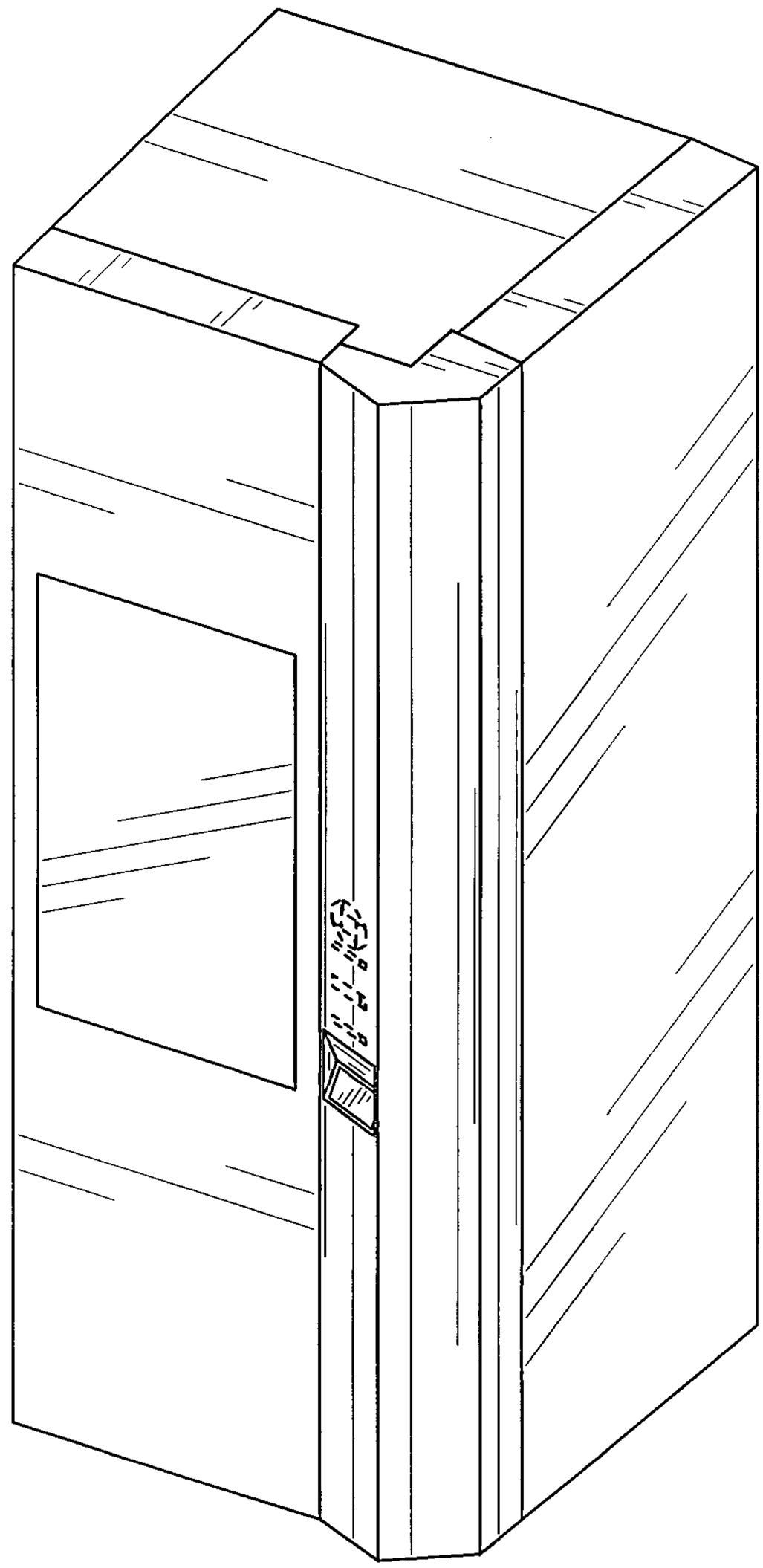

FIG. 9

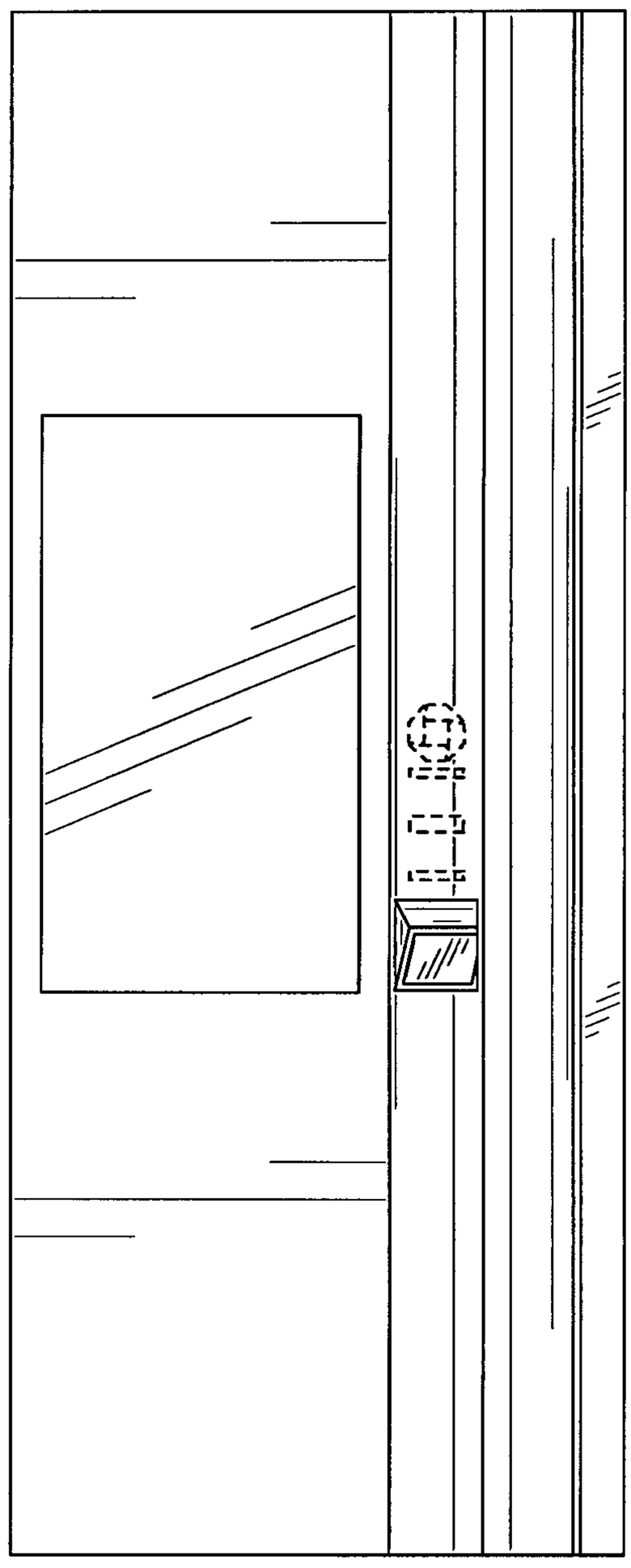

FIG. 10

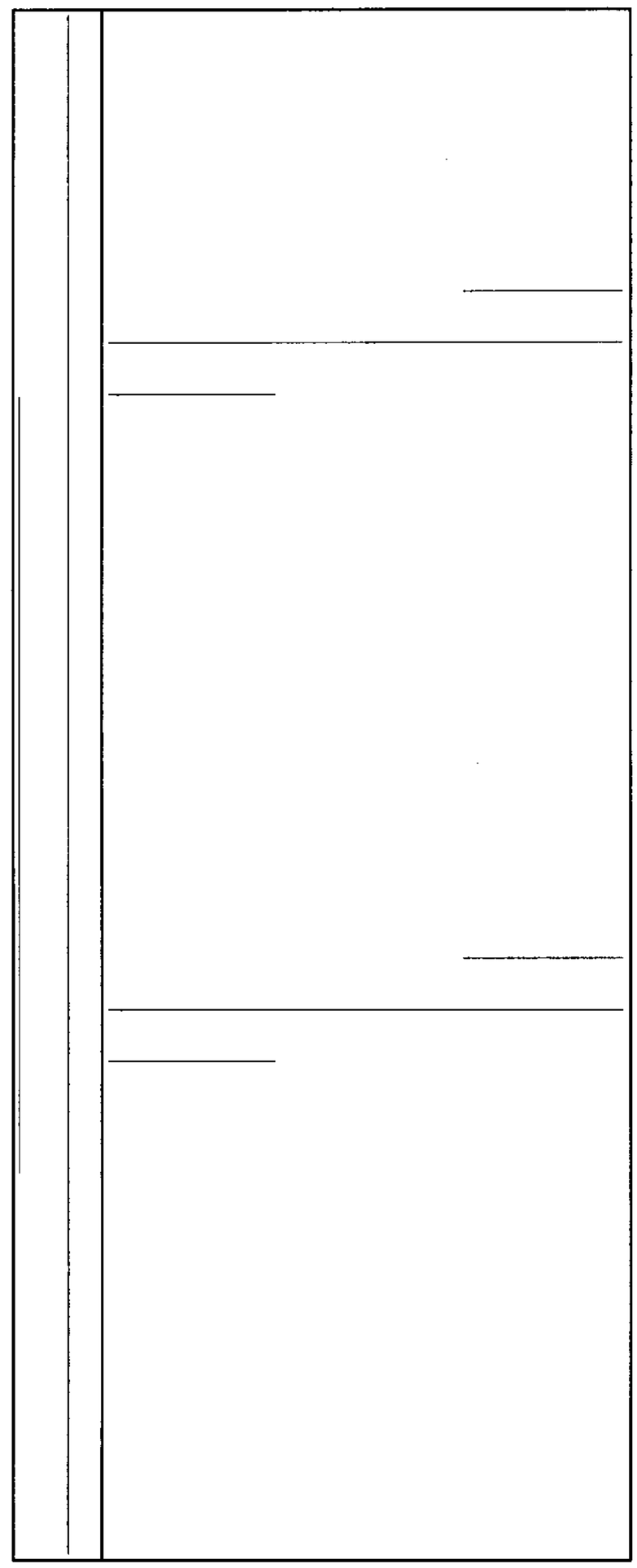

FIG. 11

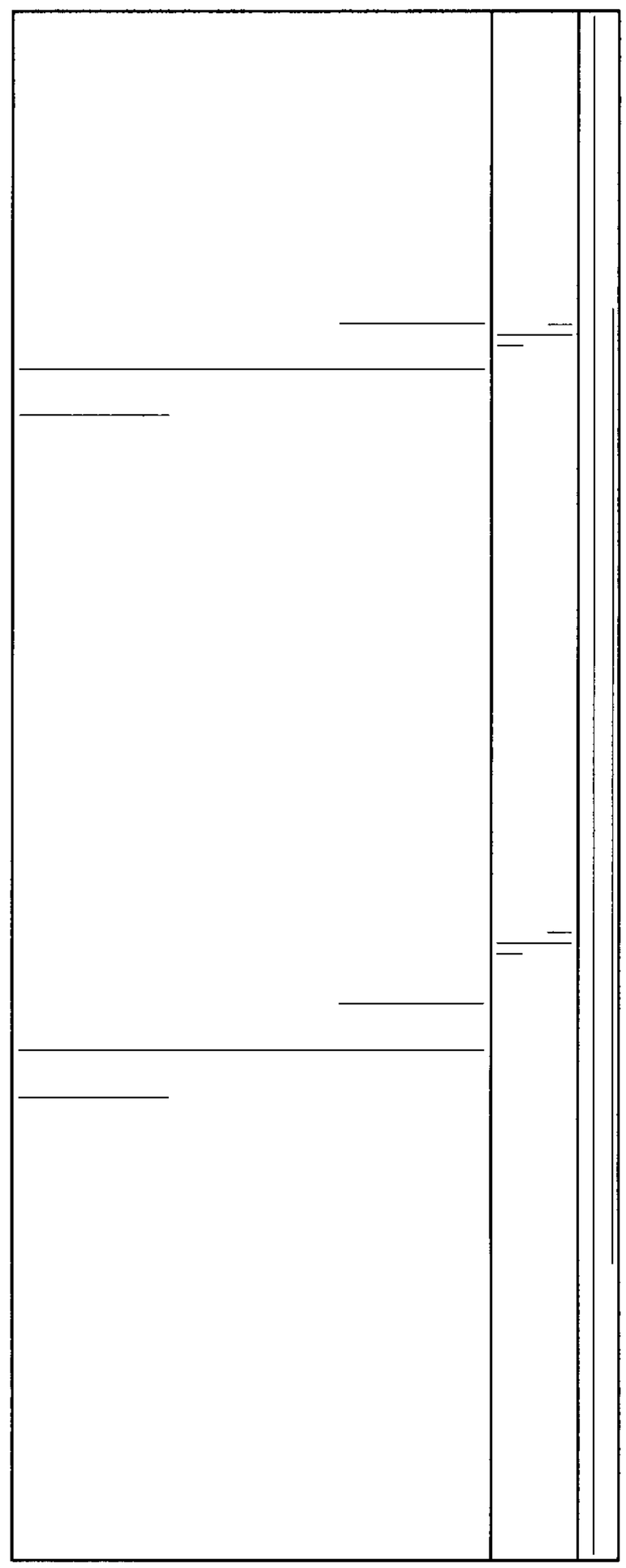

FIG. 12

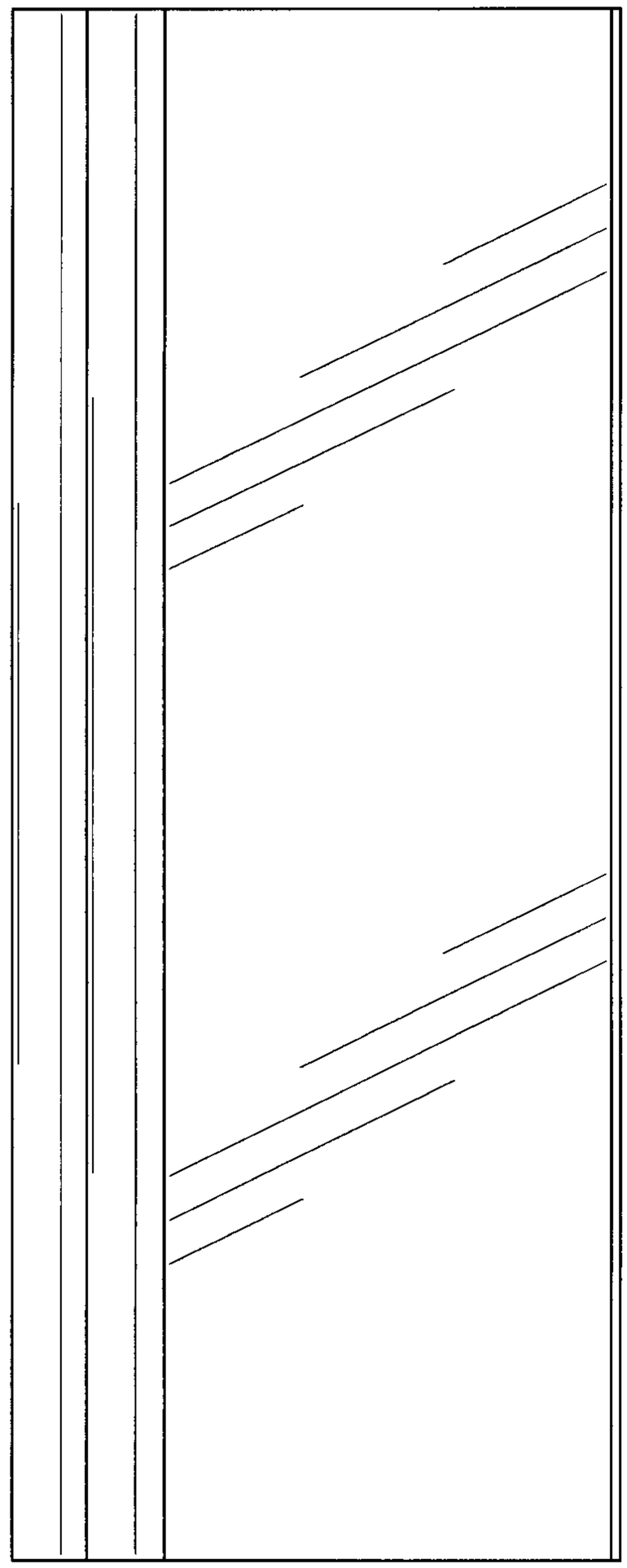

FIG. 13

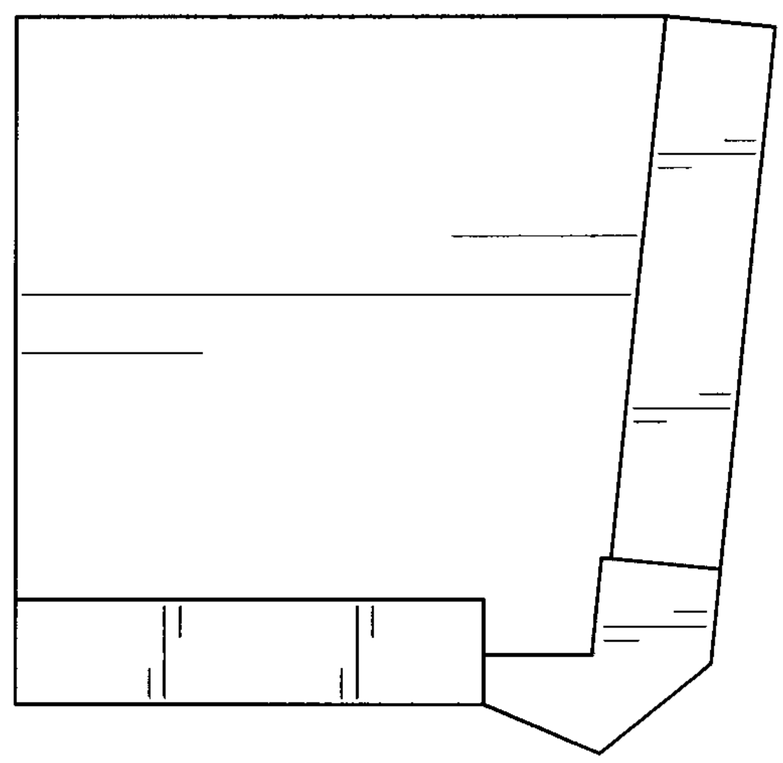

FIG. 14

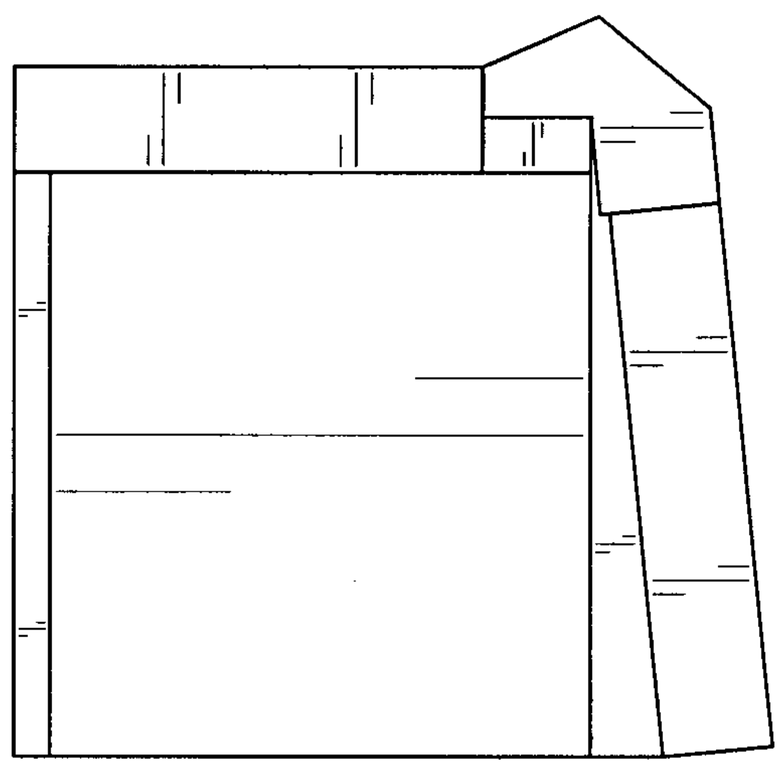

FIG. 15

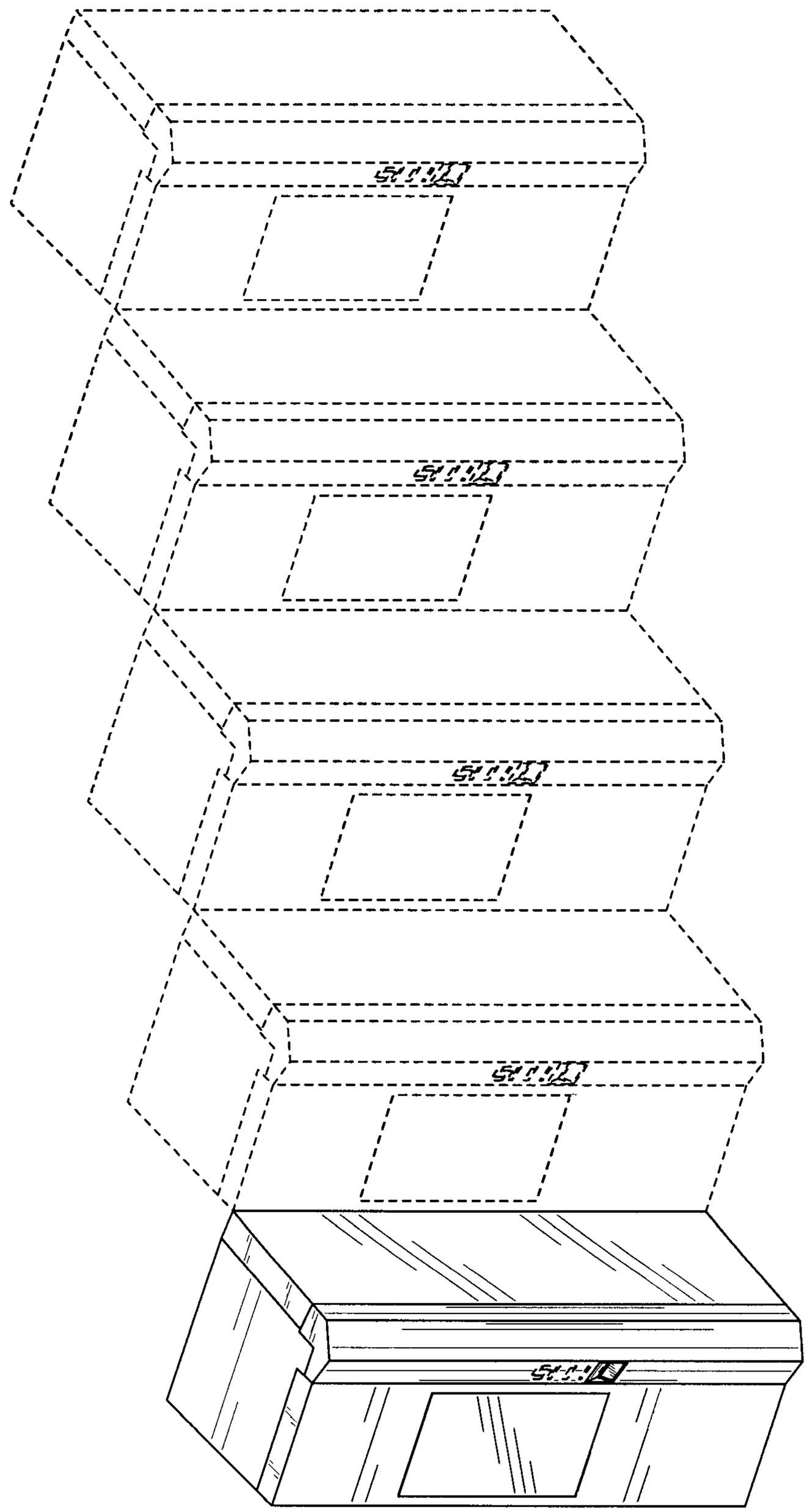

FIG. 16