US00D685140S

(12) United States Design Patent

Rosenstein et al.

(10) Patent No.: US D685,140 S
(45) Date of Patent: ** Jun. 25, 2013

(54) **FEED PARTITION**

(75) Inventors: **Maurice Rosenstein**, Navasota, TX (US); **Juan Moreno**, College Station, TX (US)

(73) Assignee: **ST Reproductive Technologies, LLC**, Navasota, TX (US)

(**) Term: **14 Years**

(21) Appl. No.: **29/384,300**

(22) Filed: **Jan. 28, 2011**

(51) **LOC (9) Cl.** **30-02**

(52) **U.S. Cl.**
USPC **D30/119**

(58) **Field of Classification Search**
USPC D30/114, 116, 119, 199; 119/406, 119/408–410, 452, 516, 519, 521, 522
See application file for complete search history.

(56) **References Cited**

U.S. PATENT DOCUMENTS

215,855	A *	5/1879	Albee	119/516
260,009	A *	6/1882	Edmands	119/408
272,451	A *	2/1883	Mather	119/410
2,595,337	A	5/1952	Coyner	
2,898,884	A *	8/1959	Messersmith	119/417
D218,174	S *	7/1970	Kitson	D30/116
3,530,830	A	9/1970	Smith	
3,602,730	A	8/1971	Cushing	
3,824,958	A	7/1974	Parady, Jr.	
3,885,524	A *	5/1975	Gregory	119/482
4,123,991	A	11/1978	Kinrade	
4,252,906	A	2/1981	Hosokawa et al.	
4,416,493	A *	11/1983	Sumner	119/452
4,498,418	A	2/1985	Chumley	
4,699,088	A	10/1987	Murray et al.	
5,005,521	A	4/1991	Strong	
5,205,241	A *	4/1993	Halpin et al.	119/60
5,524,781	A	6/1996	Podd et al.	
5,651,330	A	7/1997	Jewett	
5,950,565	A	9/1999	Guyot	
6,016,846	A	1/2000	Knittel et al.	
6,209,490	B1	4/2001	Schwede	
6,401,983	B1	6/2002	McDonald et al.	
6,792,892	B2 *	9/2004	Craig	119/502

(Continued)

FOREIGN PATENT DOCUMENTS

JP	58-167286	10/1983
JP	59-216784 A	12/1984

OTHER PUBLICATIONS

US Office Action dated Aug. 13, 2012 issued in related U.S. Appl. No. 13,051,845 (17 pages).

(Continued)

Primary Examiner — Cathy A MacCormac
(74) *Attorney, Agent, or Firm* — Cindee R. Ewell; Ryan Christensen

(57) **CLAIM**

The ornamental design for a feed partition, as shown and described.

DESCRIPTION

FIG. **1** is an isometric view of a feed partition.
FIG. **2** is an isometric view thereof with a portion broken away.
FIG. **3** is a top view of the feed partition.
FIG. **4** is a bottom view of the feed partition.
FIG. **5** is a left side view thereof.
FIG. **6** is a right side view thereof.
FIG. **7** is a front view of the feed partition; and,
FIG. **8** is a back view of the feed partition.
The broken lines are for illustrative purposes only and form no part of the claimed design.

1 Claim, 7 Drawing Sheets

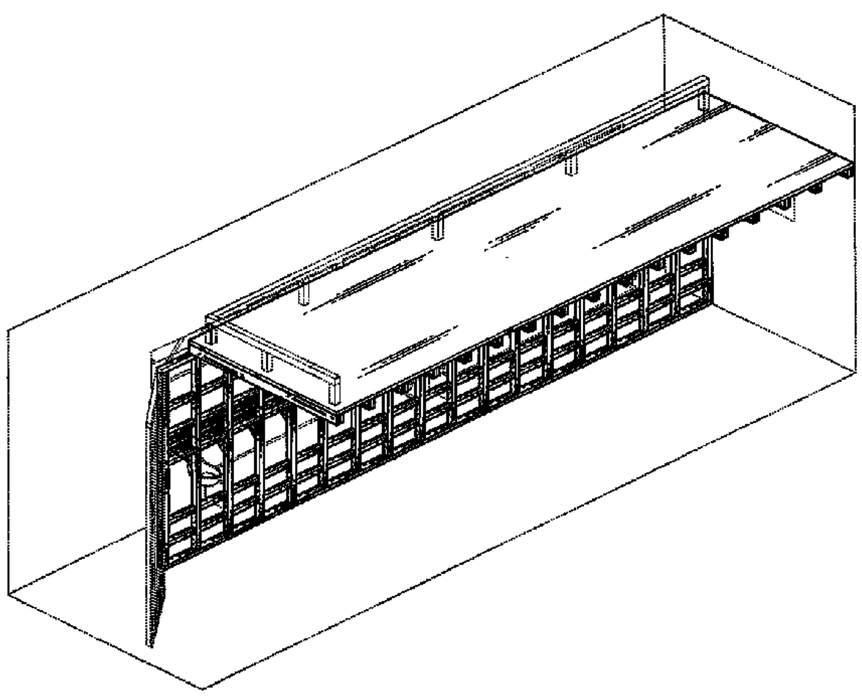

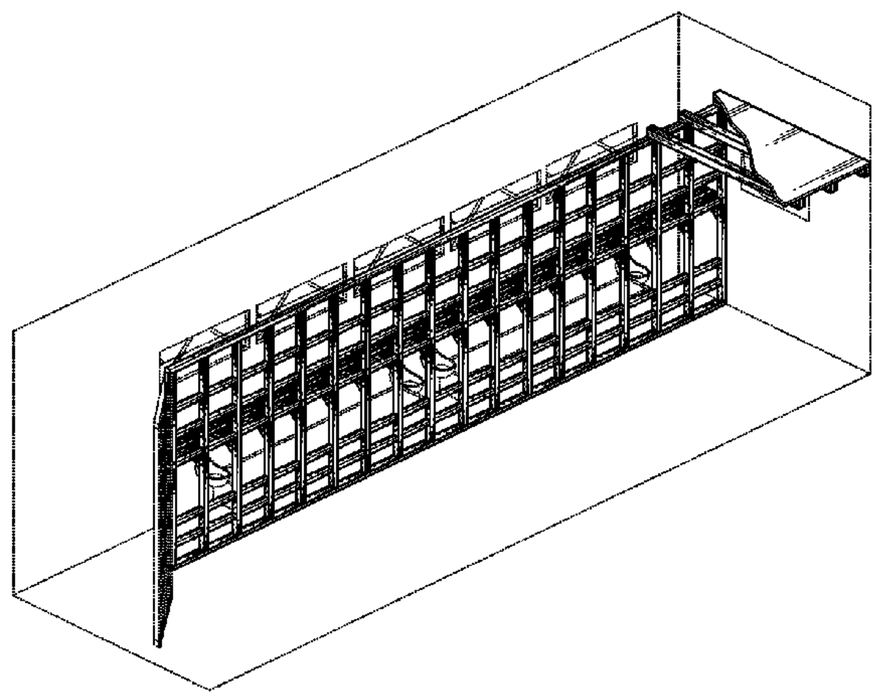

U.S. PATENT DOCUMENTS

7,044,081	B1 *	5/2006	Bridges	119/452
D579,609	S *	10/2008	Hirokawa et al.	D30/114
D630,803	S *	1/2011	Lee et al.	D30/199
7,913,651	B1 *	3/2011	Schiebout	119/496
2001/0052327	A1	12/2001	Craig	
2002/0197688	A1	12/2002	Pandolfino	
2005/0241593	A1	11/2005	Kaura	
2007/0079765	A1	4/2007	Carter et al.	
2008/0017591	A1	1/2008	Ranade et al.	
2008/0213073	A1	9/2008	Benedict et al.	
2010/0242853	A1	9/2010	Web	

OTHER PUBLICATIONS

US Office Action dated Sep. 25, 2012 issued in related U.S. Appl. No. 13/052,159 (12 pages).
U.S. Appl. No. 13/051,845, filed Mar. 18, 2011.
U.S. Appl. No. 13/051,907, filed Mar. 18, 2011.
U.S. Appl. No. 13/052,159, filed Mar. 21, 2011.
U.S. Appl. No. 13/051,943, filed Mar. 18, 2011.
U.S. Appl. No. 13/087,583, filed Apr. 15, 2011.
U.S. Application No. 13/051,754, filed Mar. 18, 2011.
Mooving Through Eastport: http://www.youtube.com/watch?v=7FmShwq_9ao; posted Oct. 30, 2010, 1 pgs.
Port of Eastport, 3rd Cattle Shipment: http://www.youtube.com/watch?v=G4IwLRnBAkE; posted Nov. 6, 2010, 3 pgs.
World Wide Livestock Express;http://www.livestockexpress.us, 2 pgs.
International Application No. PCT/US2011/024602 filed Feb. 11, 2011, 84 pgs.
Design U.S. Appl. No. 29/388,682, filed Mar. 31, 2011, 8 pgs. Now D654, 229.
U.S. Appl. No. 13/051,754, filed Mar. 18, 2011, 77 pgs.
U.S. Appl. No. 13/051,845, filed Mar. 18, 2011, 75 pgs.
U.S. Appl. No. 13/051,907, filed Mar. 18, 2011, 74 pgs.
U.S. Appl. No. 13/051,943, filed Mar. 18, 2011, 72 pgs.
U.S. Appl. No. 13/052,159, filed Mar. 21, 2011, 75 pgs.
U.S. Appl. No. 13/087,583, filed Apr. 15, 2011, 84 pgs.
Batca Brothers LLC; http://www.Batcalivestock.com, 1 pg.
Australian First Examiners Report dated May 24, 2011 issued in corresponding Australian Application No. 2011100193 (3 pages).
New Zealand First Examiner's Report dated Mar. 14, 2011, issued in corresponding New Zealand Application No. 414638 (2 pages).
New Zealand Second Examiner's Report dated Jun. 3, 2011, issued in corresponding New Zealand Application No. 414638 (1 page).

* cited by examiner

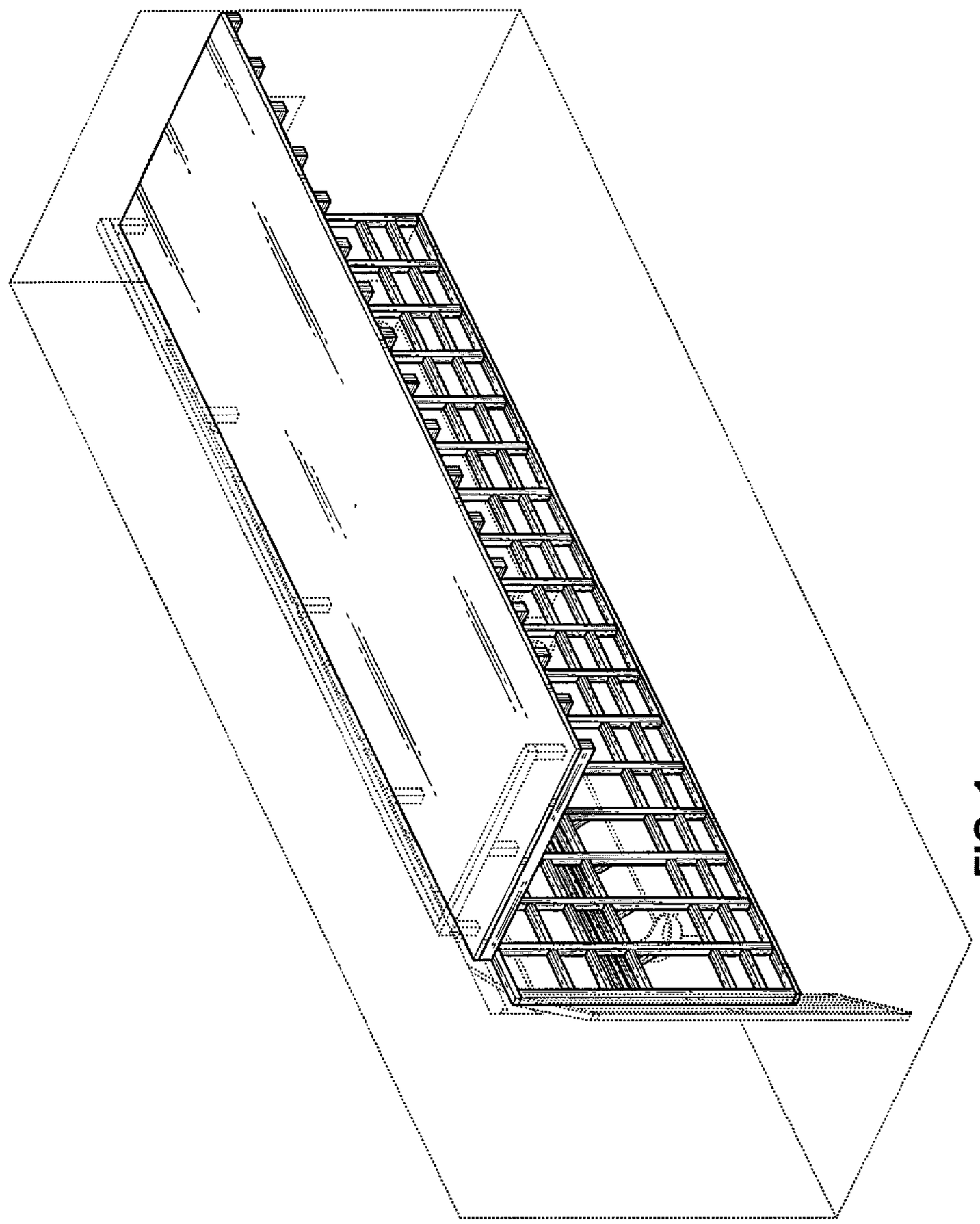

FIG. 1

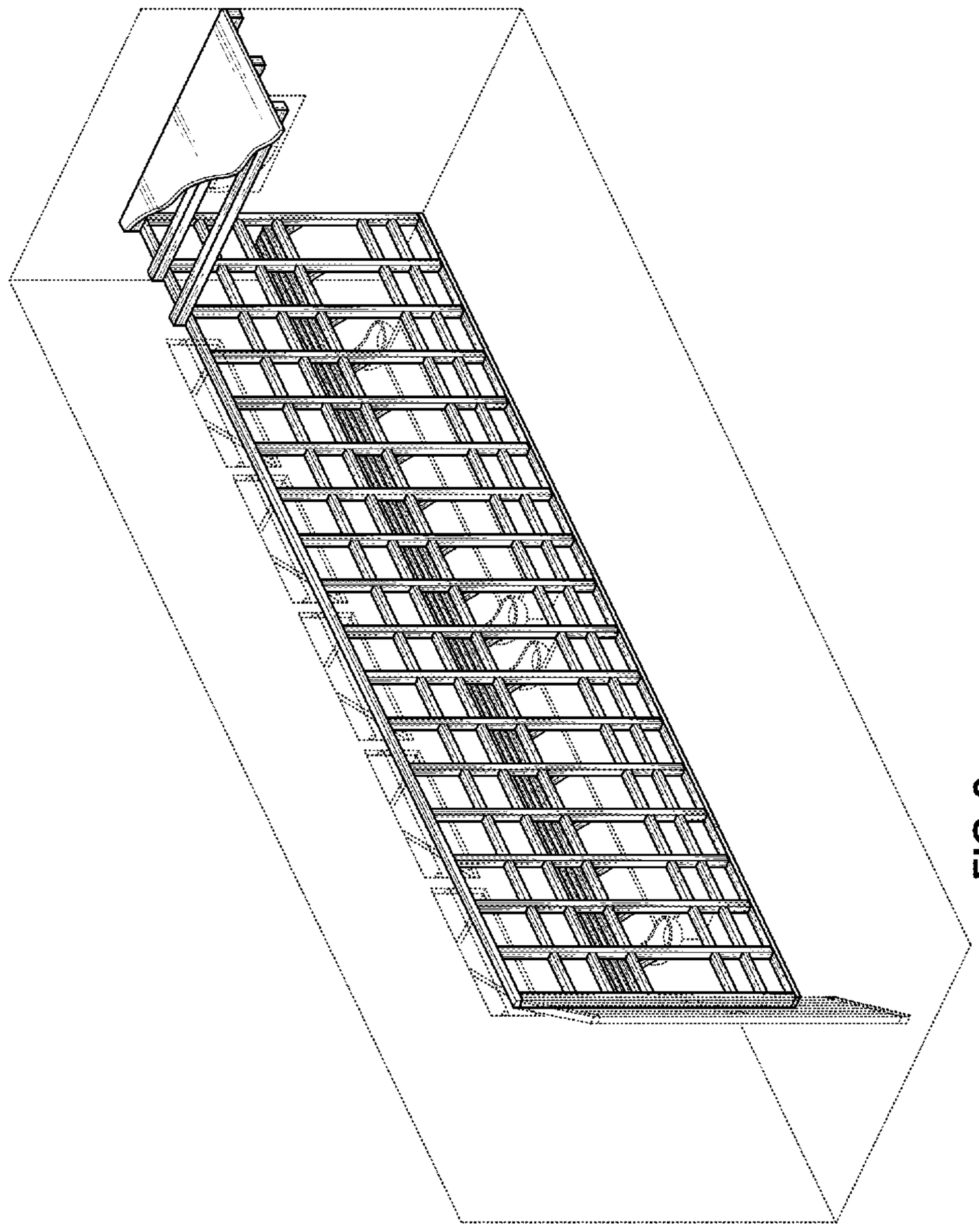

FIG. 2

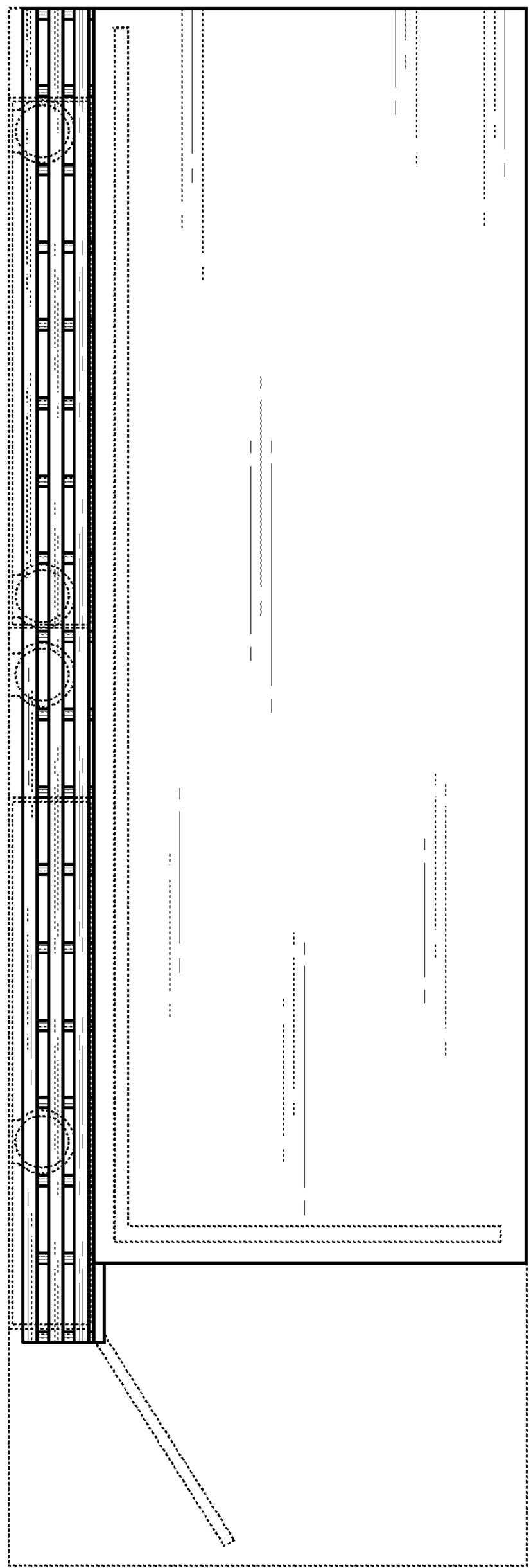

FIG. 3

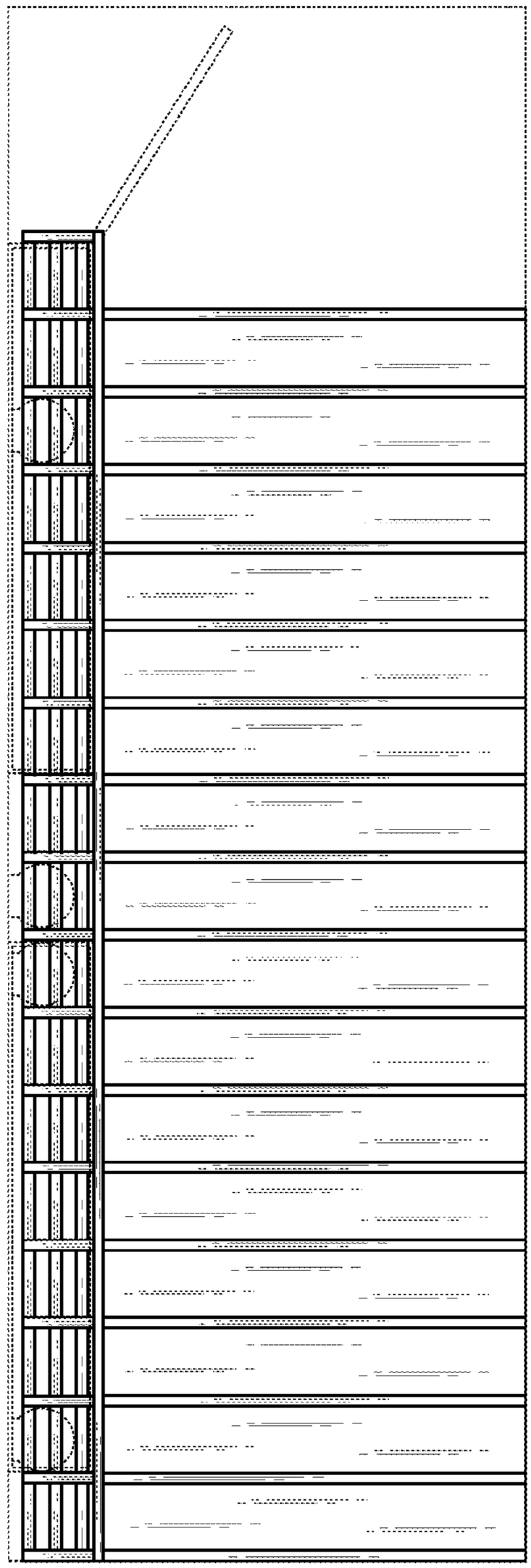

FIG. 4

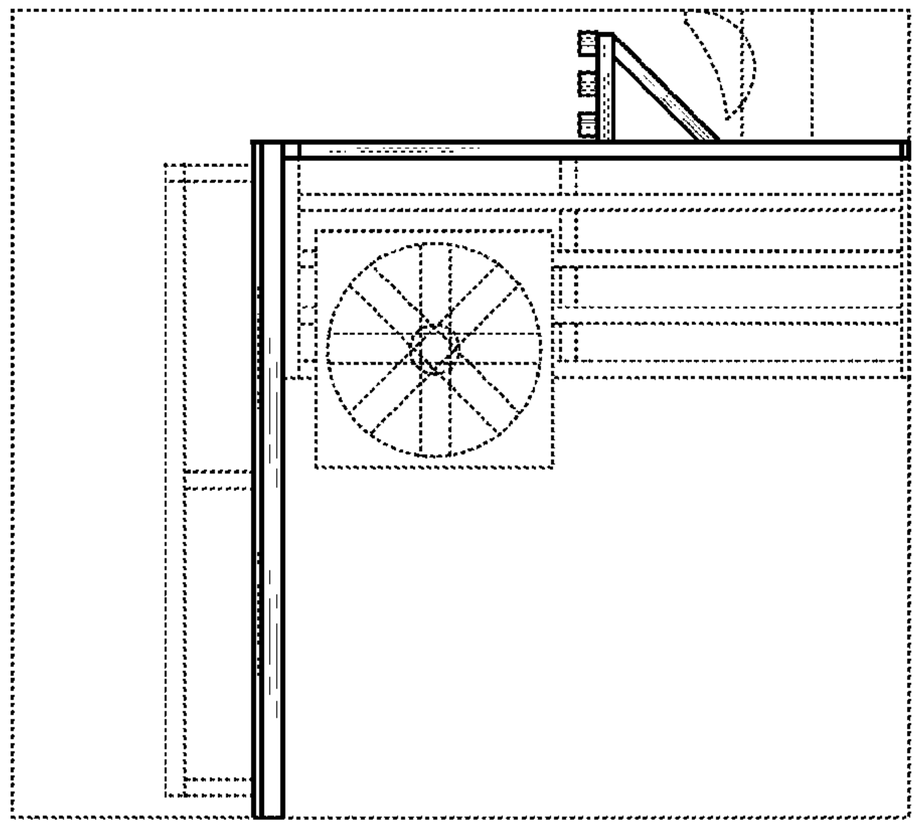

FIG. 6

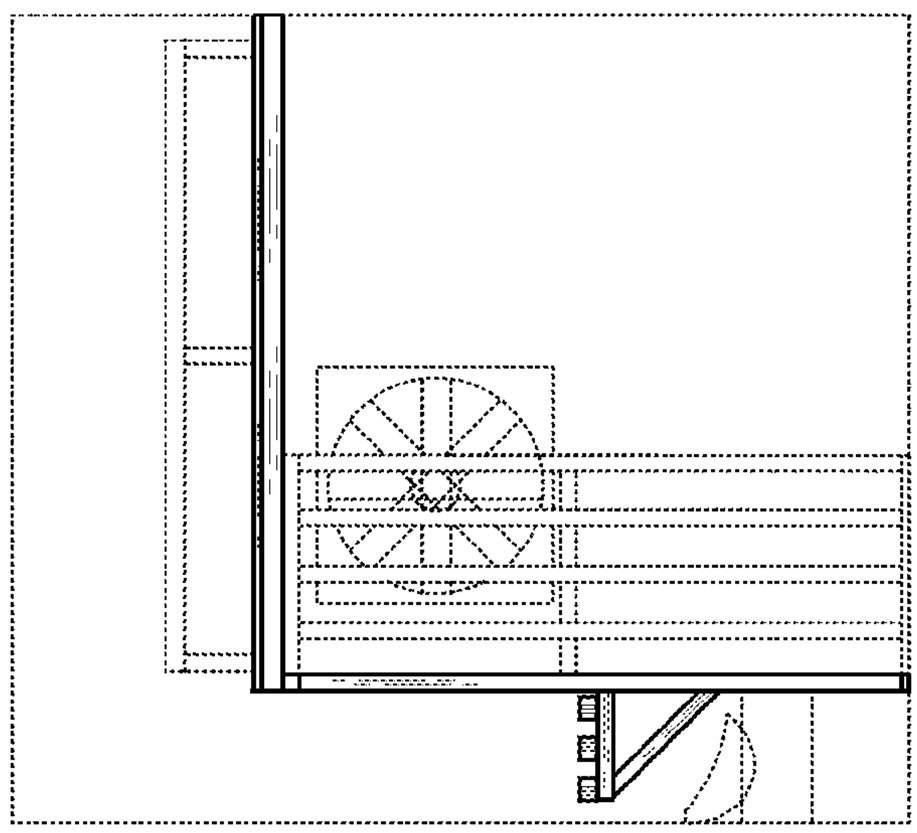

FIG. 5

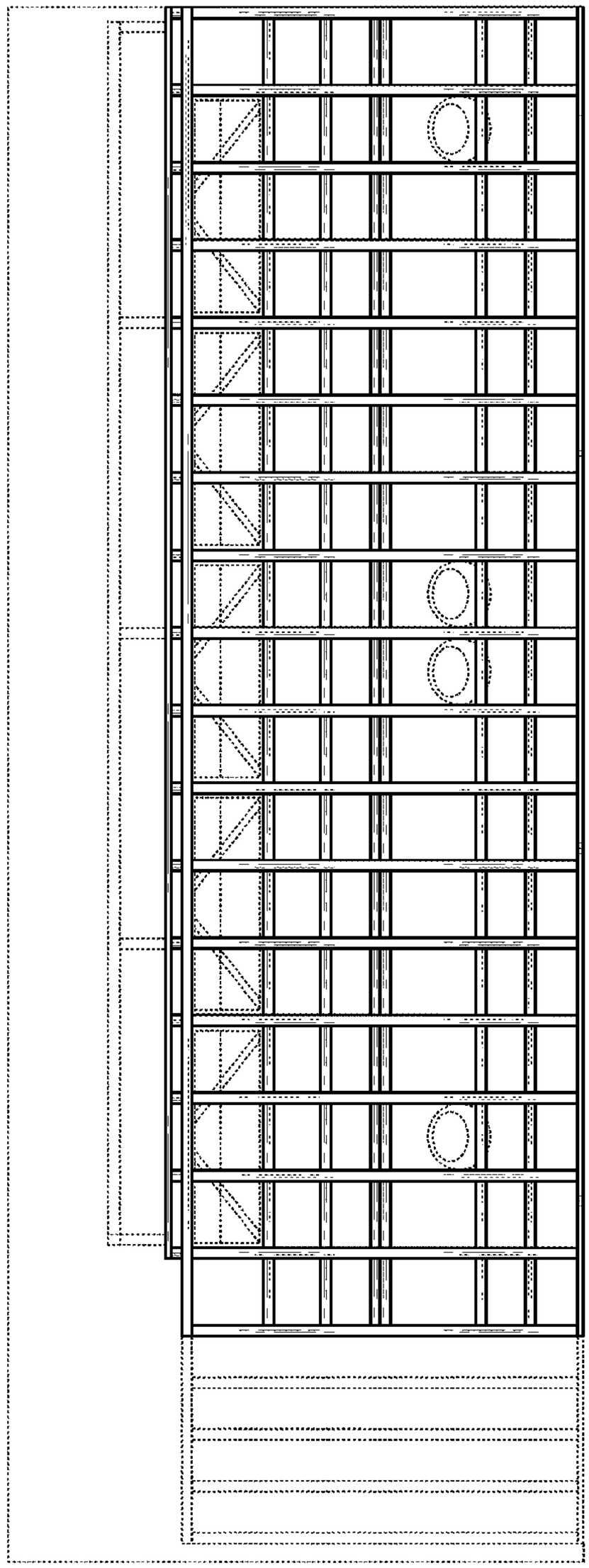

FIG. 7

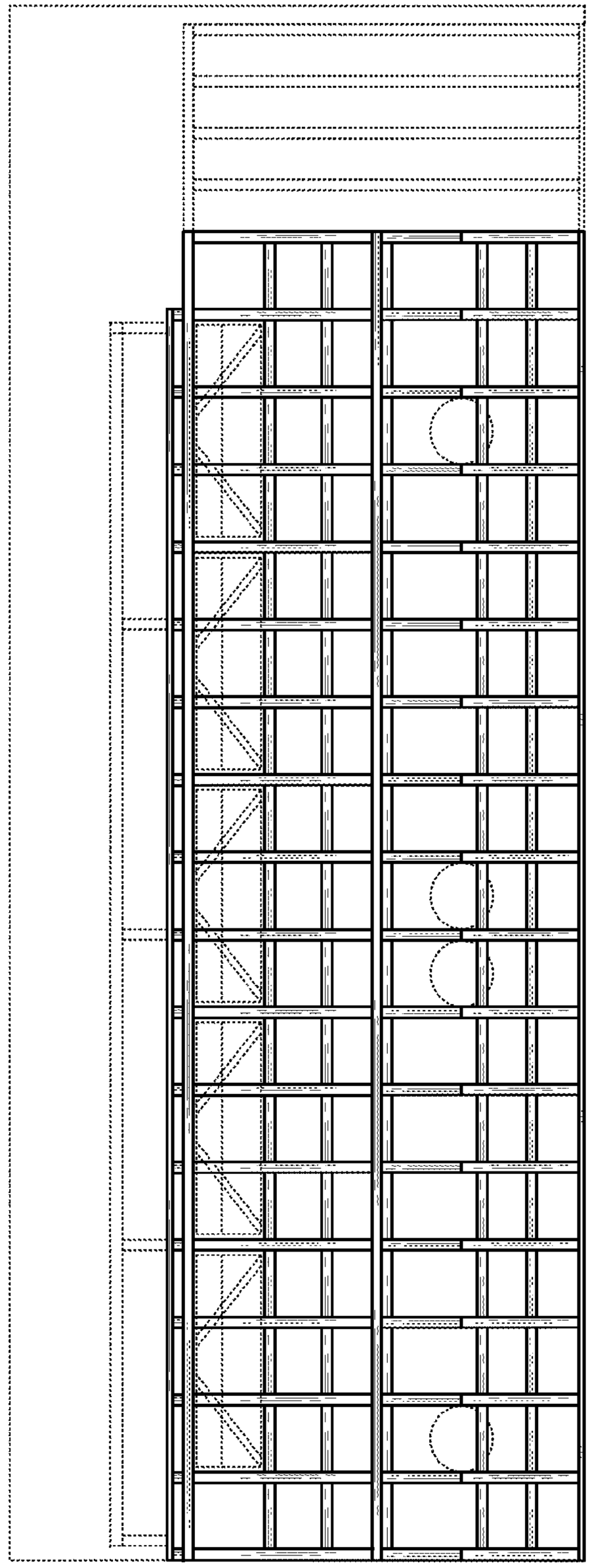

FIG. 8