US00D682215S

# (12) United States Design Patent
Miller

(10) Patent No.: US D682,215 S
(45) Date of Patent: ** May 14, 2013

(54) **DOCKING BAY ELECTRICAL OUTLET UNIT**

(76) Inventor: **Dennis L. Miller**, Bettendorf, IA (US)

(**) Term: **14 Years**

(21) Appl. No.: **29/417,535**

(22) Filed: **Apr. 4, 2012**

(51) **LOC (9) Cl.** ..... **13-03**

(52) **U.S. Cl.**
USPC ..... **D13/139.8**

(58) **Field of Classification Search** ..... D13/107, D13/109, 110, 112, 114, 130, 132, 137, 137.1, D13/137.2, 137.3, 137.4, 138.1, 139.1, 139.2, D13/139.4, 139.5, 139.7, 139.8, 146, 147, D13/152, 160, 161, 164, 199
See application file for complete search history.

(56) **References Cited**

U.S. PATENT DOCUMENTS

| | | | | | |
|---|---|---|---|---|---|
| D312,615 | S | * | 12/1990 | Schwartz | D13/137.2 |
| D318,849 | S | * | 8/1991 | Luu | D13/138.2 |
| D357,460 | S | * | 4/1995 | Lovett | D13/139.1 |
| D443,589 | S | * | 6/2001 | Tong et al. | D13/137.2 |
| D486,126 | S | * | 2/2004 | Aromin | D13/137.2 |
| D528,076 | S | * | 9/2006 | Tan | D13/137.2 |
| D547,271 | S | * | 7/2007 | Ng | D13/137.1 |
| D641,481 | S | * | 7/2011 | Fisher et al. | D24/186 |

OTHER PUBLICATIONS

http://www.drugstore.com/philips-power-multiplier-6-outlet-tap-with-night-light/qxp351 . . . Dec. 12, 2012.*

* cited by examiner

*Primary Examiner* — Robert M Spear
*Assistant Examiner* — Rhea Shields
(74) *Attorney, Agent, or Firm* — Hamilton IP Law, PC; Jay R. Hamilton; Charles A. Damschen

(57) **CLAIM**

The ornamental design for a docking bay electrical outlet unit, as shown and described.

**DESCRIPTION**

U.S. patent applicaton Ser. No. 13/043,455 filed on Mar. 8, 2011 and U.S. patent applicaton Ser. No. 12/768,724 filed on Apr. 27, 2010.

FIG. **1** is a front perspective view showing my new design;
FIG. **2** is a front side view thereof;
FIG. **3** is a back side view thereof;
FIG. **4** is a right side view thereof;
FIG. **5** is a left side view thereof;
FIG. **6** is a top side view thereof; and,
FIG. **7** is a bottom side view thereof.

The broken lines in the Figures are for illustrative purposes only and form no part of the claimed design.

**1 Claim, 7 Drawing Sheets**

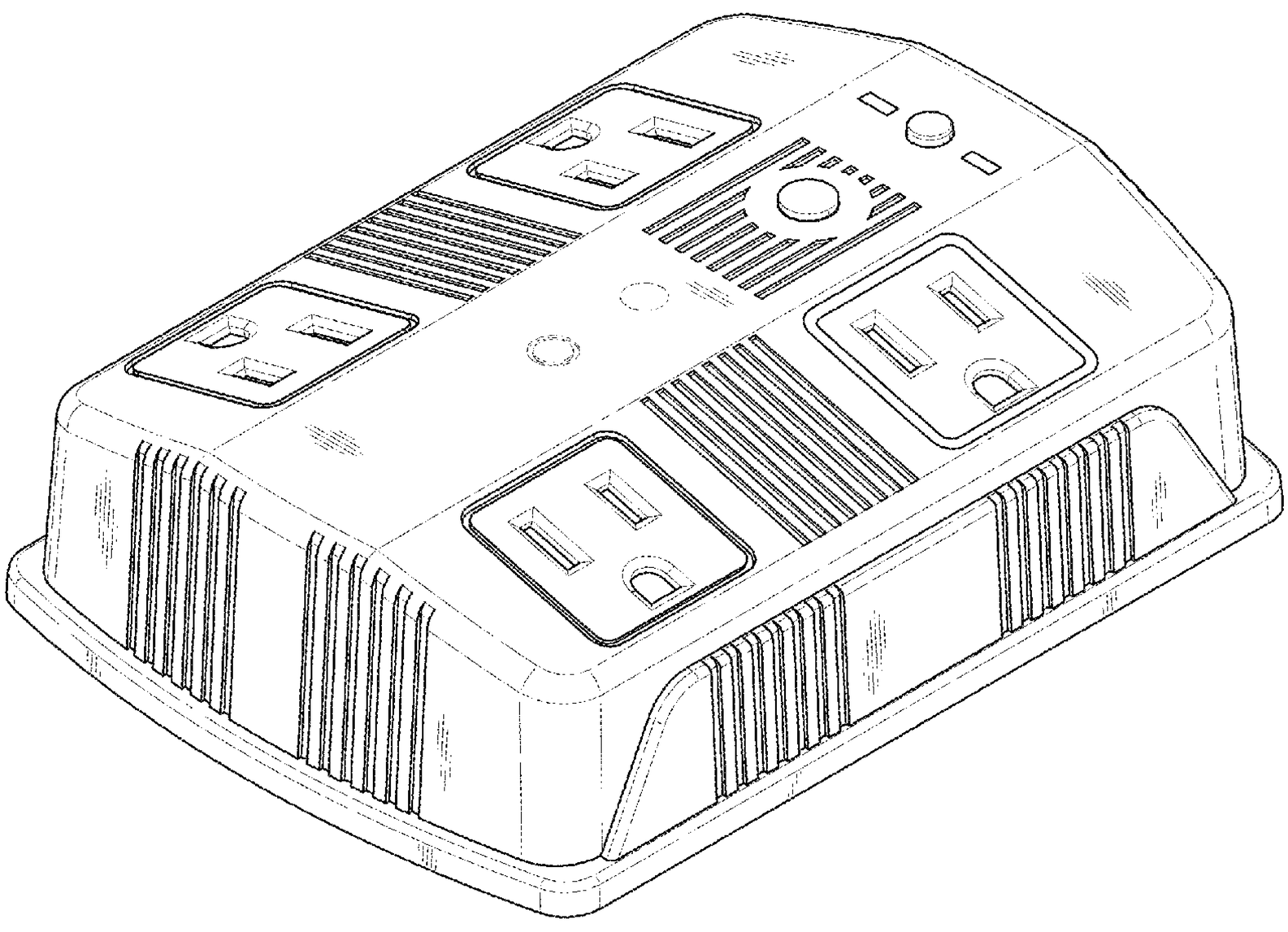

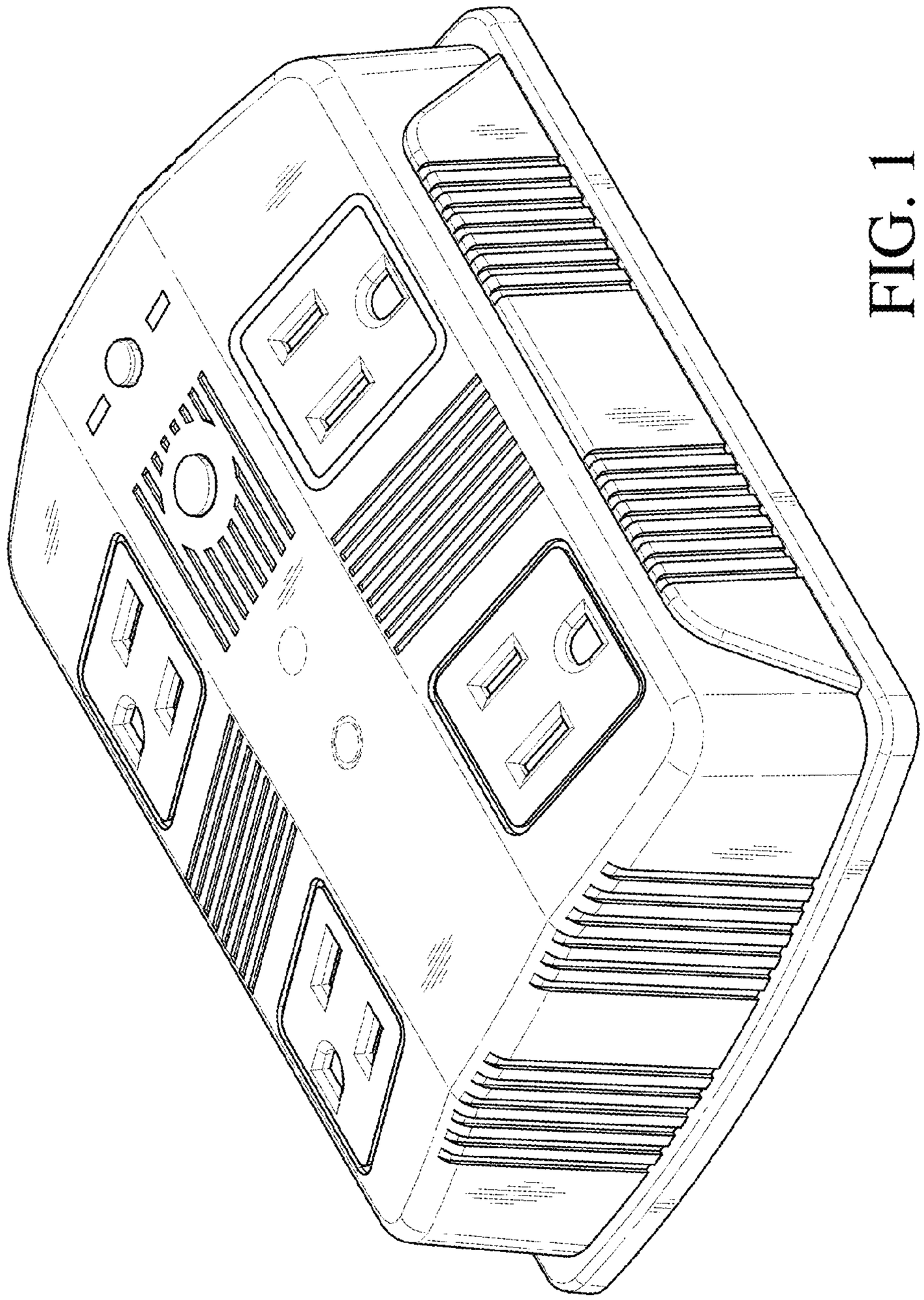

FIG. 1

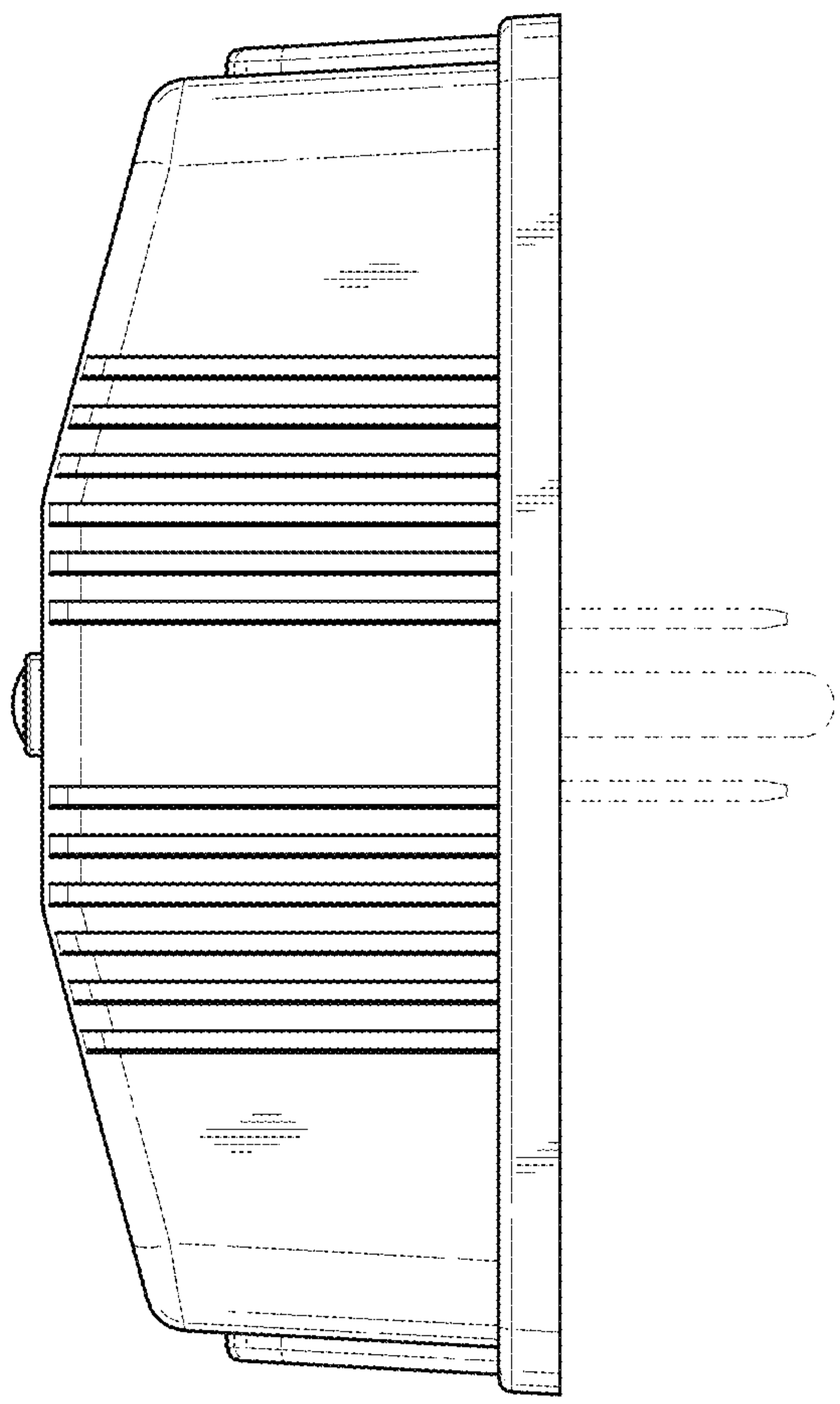

FIG. 2

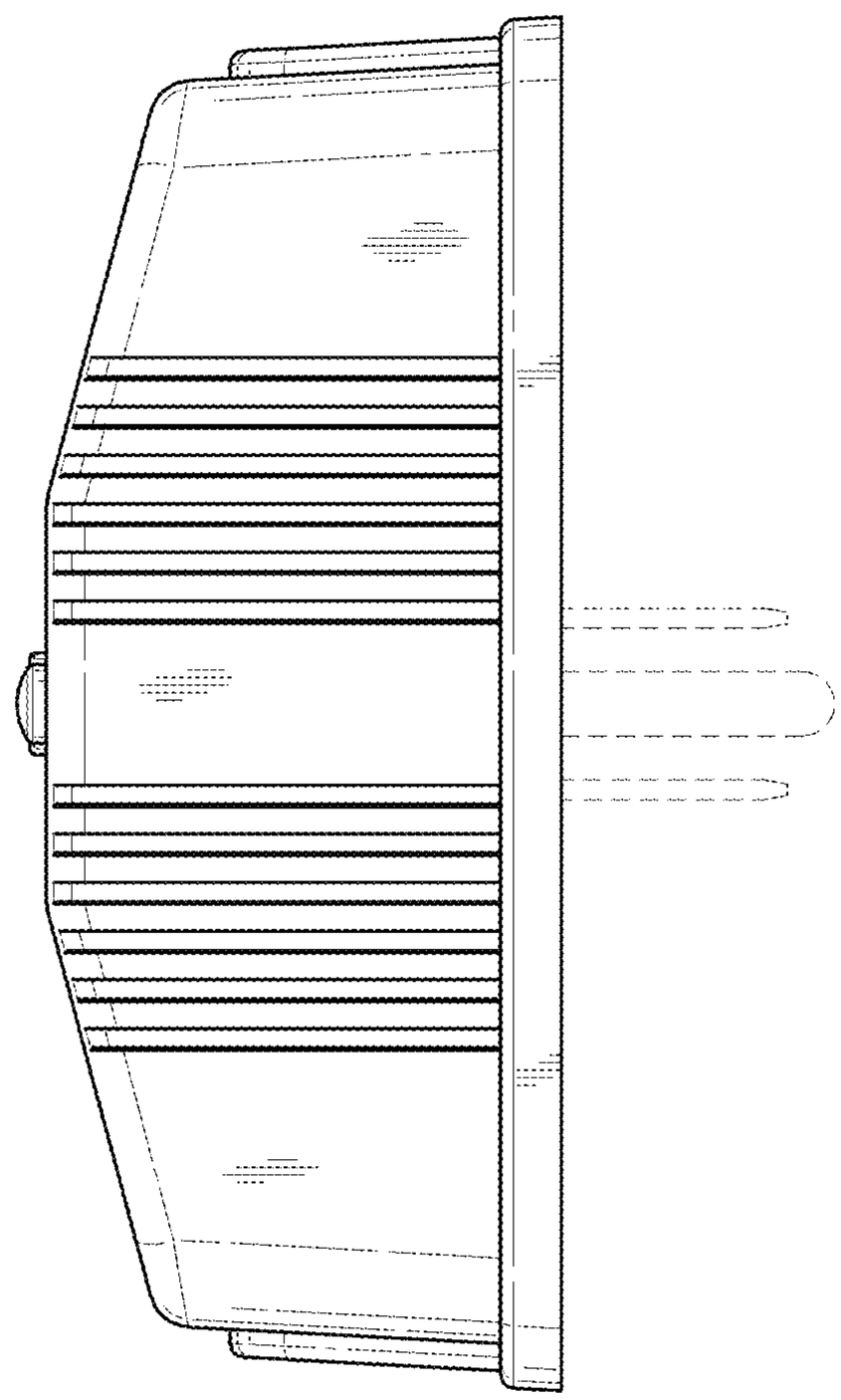

FIG. 3

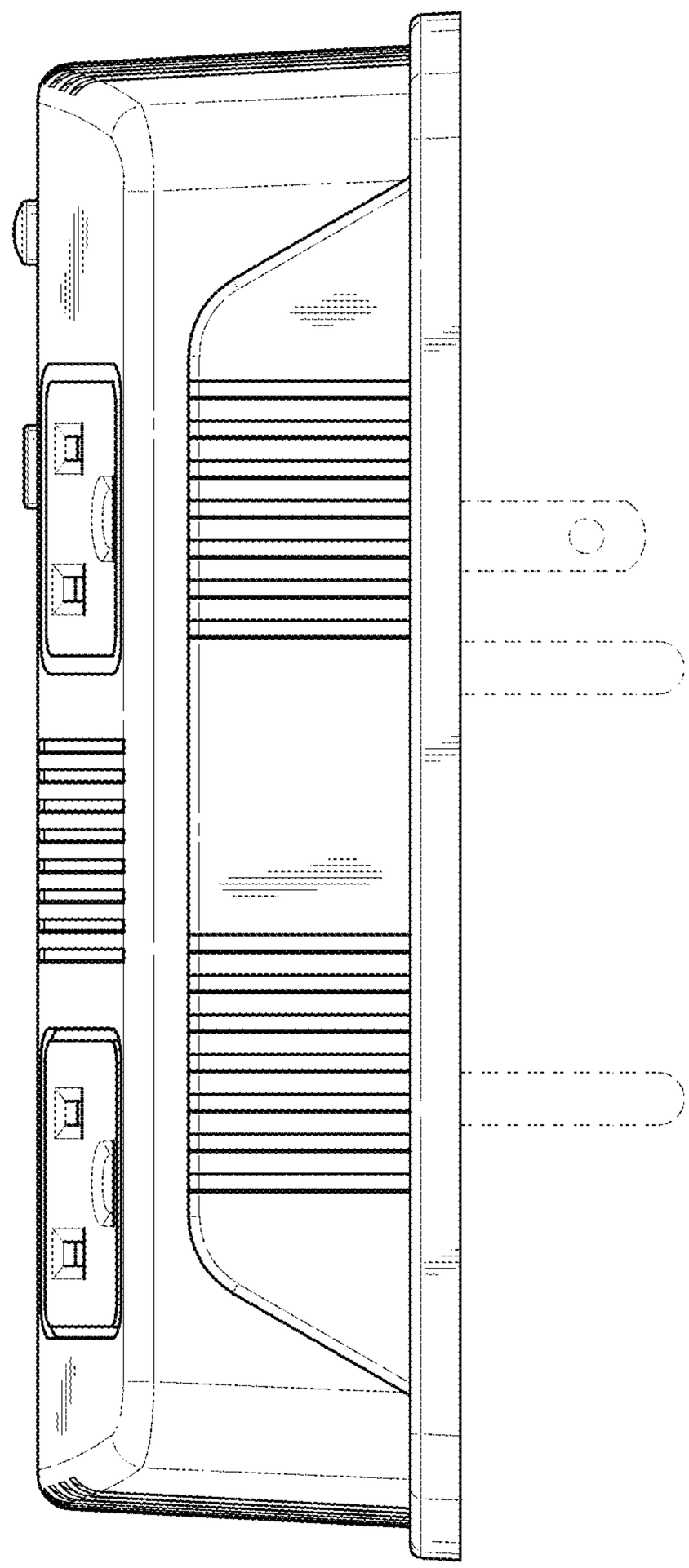

FIG. 4

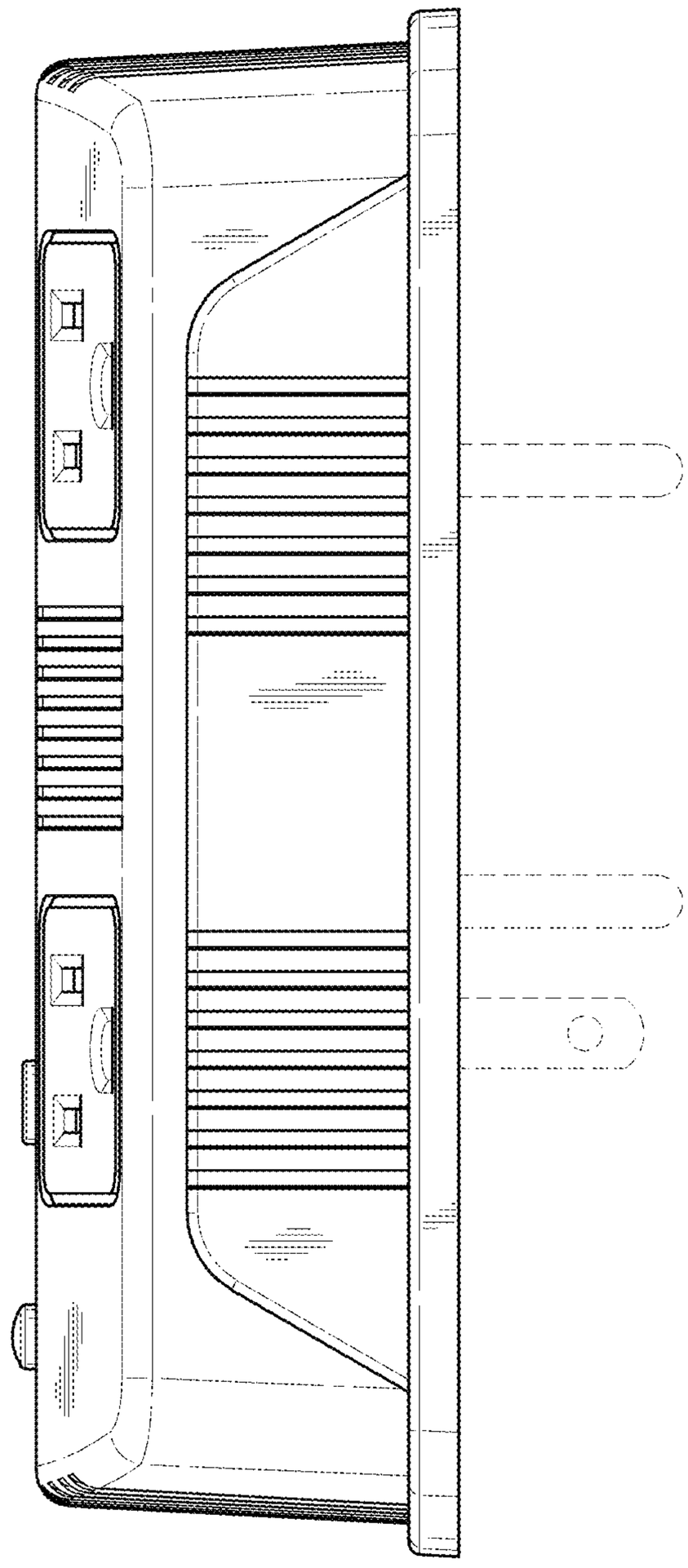

FIG. 5

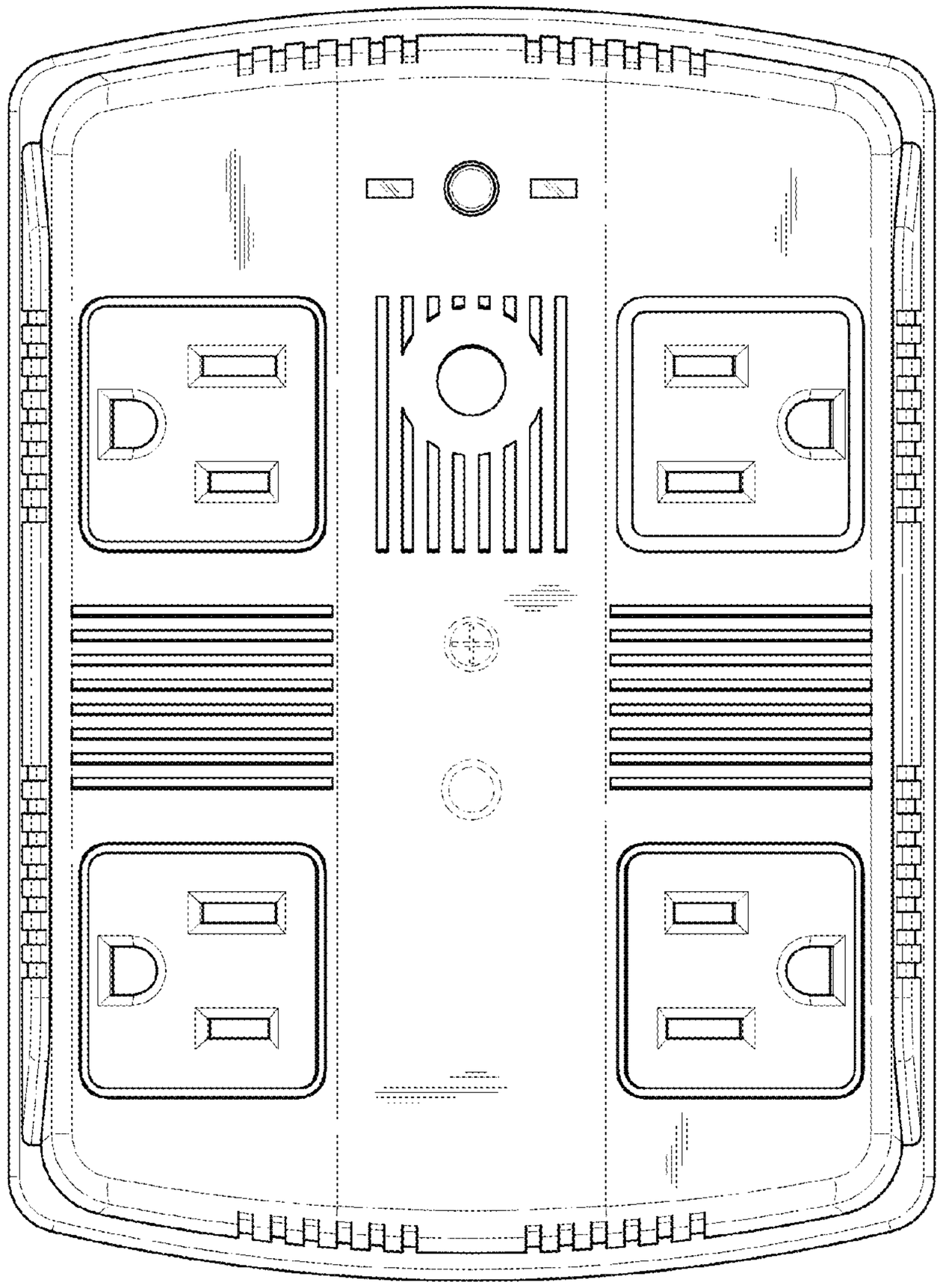

FIG. 6

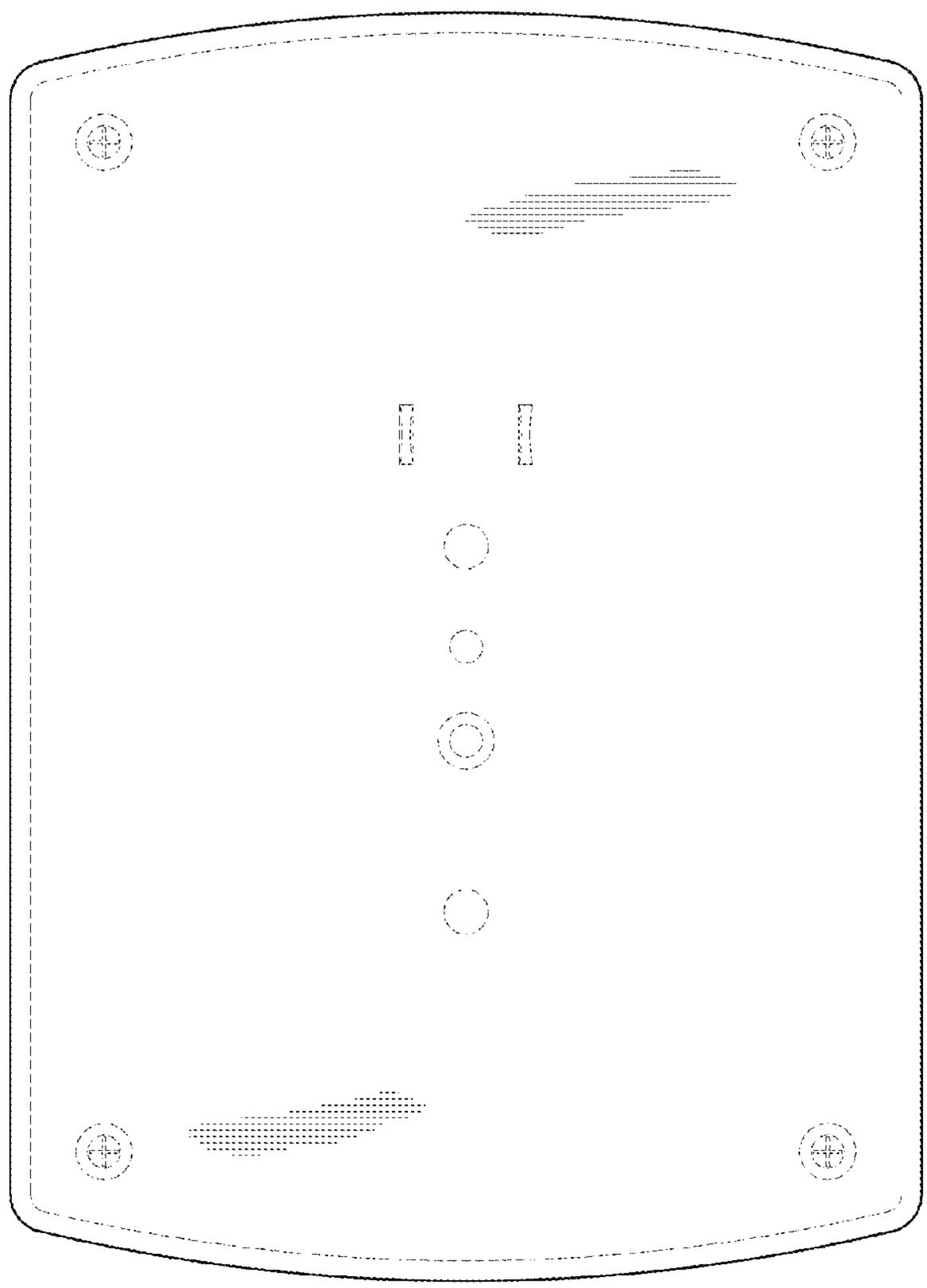

FIG. 7