US00D682086S

(12) United States Design Patent
Riley et al.

(10) Patent No.: US D682,086 S
(45) Date of Patent: ** May 14, 2013

(54) **CONSUMER GOODS BASKET**

(75) Inventors: **Allie M. Riley**, Hebron, KY (US); **Andrew D. Gordon**, Cincinnati, OH (US)

(73) Assignee: **Fresh Express Incorporated**, Salinas, CA (US)

(**) Term: **14 Years**

(21) Appl. No.: **29/397,873**

(22) Filed: **Jul. 21, 2011**

Related U.S. Application Data

(63) Continuation-in-part of application No. 29/380,425, filed on Dec. 3, 2010, now Pat. No. Des. 658,979.

(51) **LOC (9) Cl.** **09-03**

(52) **U.S. Cl.**
USPC **D9/418**

(58) **Field of Classification Search** D3/276, D3/294, 302–306; D7/354–364, 391; D9/418–434, D9/452–456, 499, 681; 99/340; 206/423, 206/501–505, 507–508, 521, 521.1, 521.2, 206/550–551, 591; 217/122–124; 220/4.21–4.26, 220/324, 485, 491–495, 604–607, 668–669, 220/675–676, 819, 839, 912–913; 229/106, 229/114–120, 125.19, 125.26, 125.29, 160.2, 229/164, 406–407, 901–906
See application file for complete search history.

(56) **References Cited**

U.S. PATENT DOCUMENTS

D302,620	S		8/1989	Quong	
D343,576	S	*	1/1994	Krupa	D9/423
D361,036	S	*	8/1995	Krupa	D9/424
D393,204	S	*	4/1998	Goins et al.	D9/425
D397,610	S	*	9/1998	Cooper	D9/425
5,878,656	A	*	3/1999	Fletcher et al.	99/340
5,992,673	A	*	11/1999	Hwang	220/819
D425,704	S		5/2000	Zamecnik	
D429,565	S	*	8/2000	Aiken	D3/302
D450,925	S		11/2001	Zamecnik	
D451,278	S	*	12/2001	Cooper	D3/294
D486,644	S	*	2/2004	Claypool	D3/304
D502,869	S	*	3/2005	Clarke	D9/425
D551,975	S	*	10/2007	Gomoll et al.	D9/452
D553,359	S	*	10/2007	Johansen	D3/276
D573,015	S	*	7/2008	Chen	D9/427
D577,579	S	*	9/2008	Lymn et al.	D9/426

(Continued)

Primary Examiner — Ricky Pham
(74) *Attorney, Agent, or Firm* — Kilpatrick Townsend & Stockton LLP

(57) **CLAIM**

The ornamental design for a consumer goods basket, as shown and described.

DESCRIPTION

FIG. **1** is a perspective view of a consumer goods basket showing our new design;
FIG. **2** is a front elevational view thereof;
FIG. **3** is a rear elevational view thereof;
FIG. **4** is a top plan view thereof;
FIG. **5** is a bottom plan view thereof;
FIG. **6** is a right side elevational view thereof;
FIG. **7** is a left right side elevational view thereof;
FIG. **8** is a perspective view of the consumer goods basket of FIG. **1**, shown in an open position for clarity and completeness of disclosure;
FIG. **9** is a front elevational view thereof;
FIG. **10** is a rear elevational view thereof;
FIG. **11** is a top plan view thereof;
FIG. **12** is a bottom plan view thereof;
FIG. **13** is a right side elevational view thereof; and,
FIG. **14** is a left right side elevational view thereof.

1 Claim, 10 Drawing Sheets

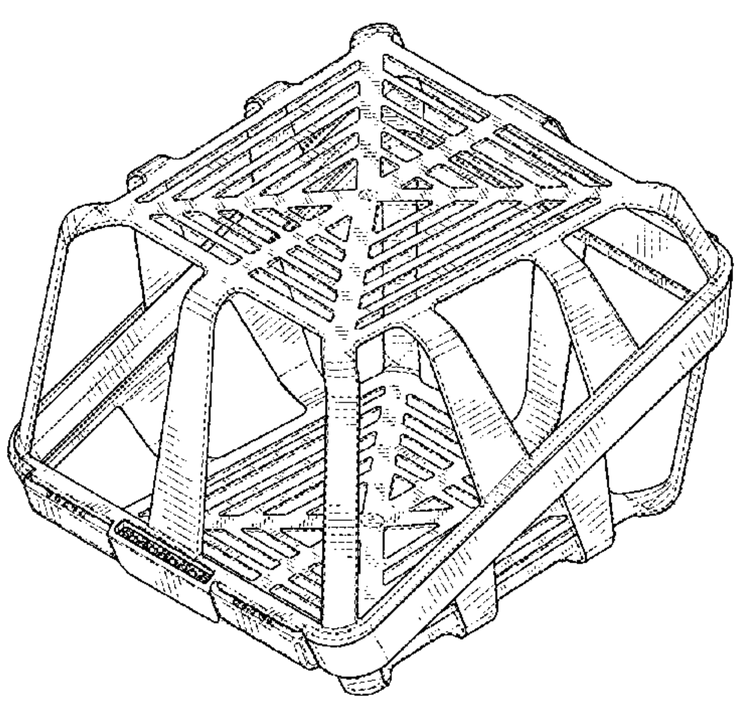

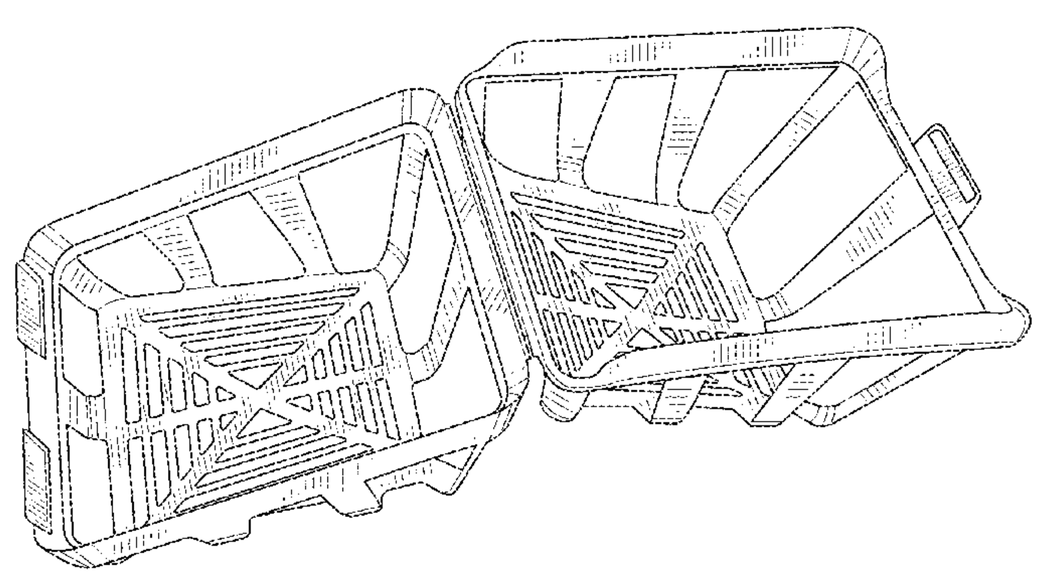

U.S. PATENT DOCUMENTS

D579,326 S * 10/2008 Chen D9/427
D601,013 S * 9/2009 Petitjean D9/426
D608,073 S 1/2010 Alves
D611,709 S 3/2010 Ceravolo
D616,201 S 5/2010 Bui
D616,255 S 5/2010 Goodman
D628,062 S * 11/2010 Snedden et al. D9/426
D630,506 S * 1/2011 Short et al. D9/427
D633,332 S * 3/2011 Sarnoff et al. D7/354
D634,122 S * 3/2011 Goodman et al. D3/306
D637,453 S * 5/2011 Chatterton D7/391
D640,544 S * 6/2011 Sifuentes et al. D9/425
D658,979 S * 5/2012 Gordon et al. D9/418
D664,428 S * 7/2012 Rivera et al. D9/426
8,245,875 B2 * 8/2012 Everson 220/839
8,328,039 B2 * 12/2012 Short et al. 220/324

* cited by examiner

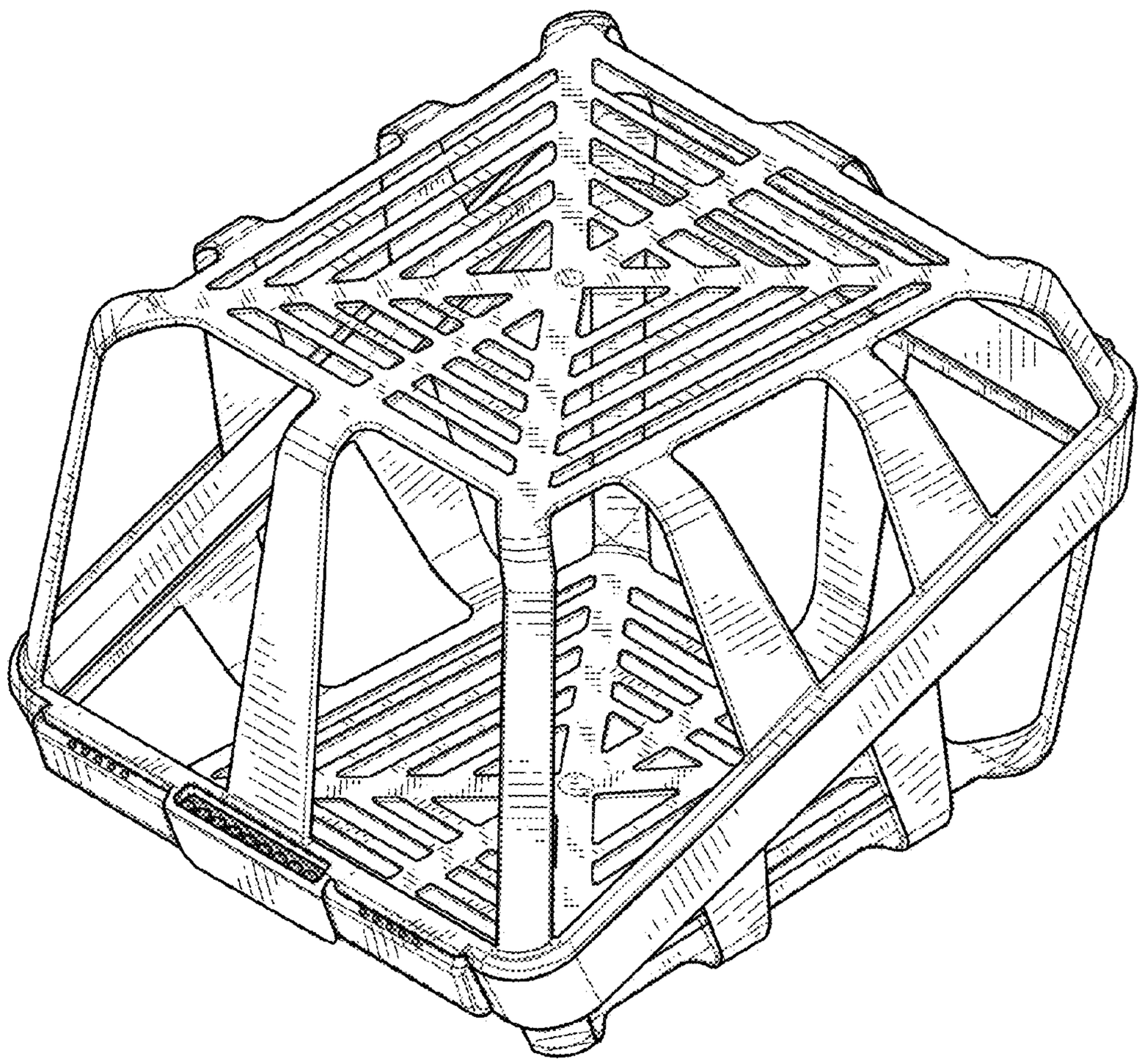

FIG. 1

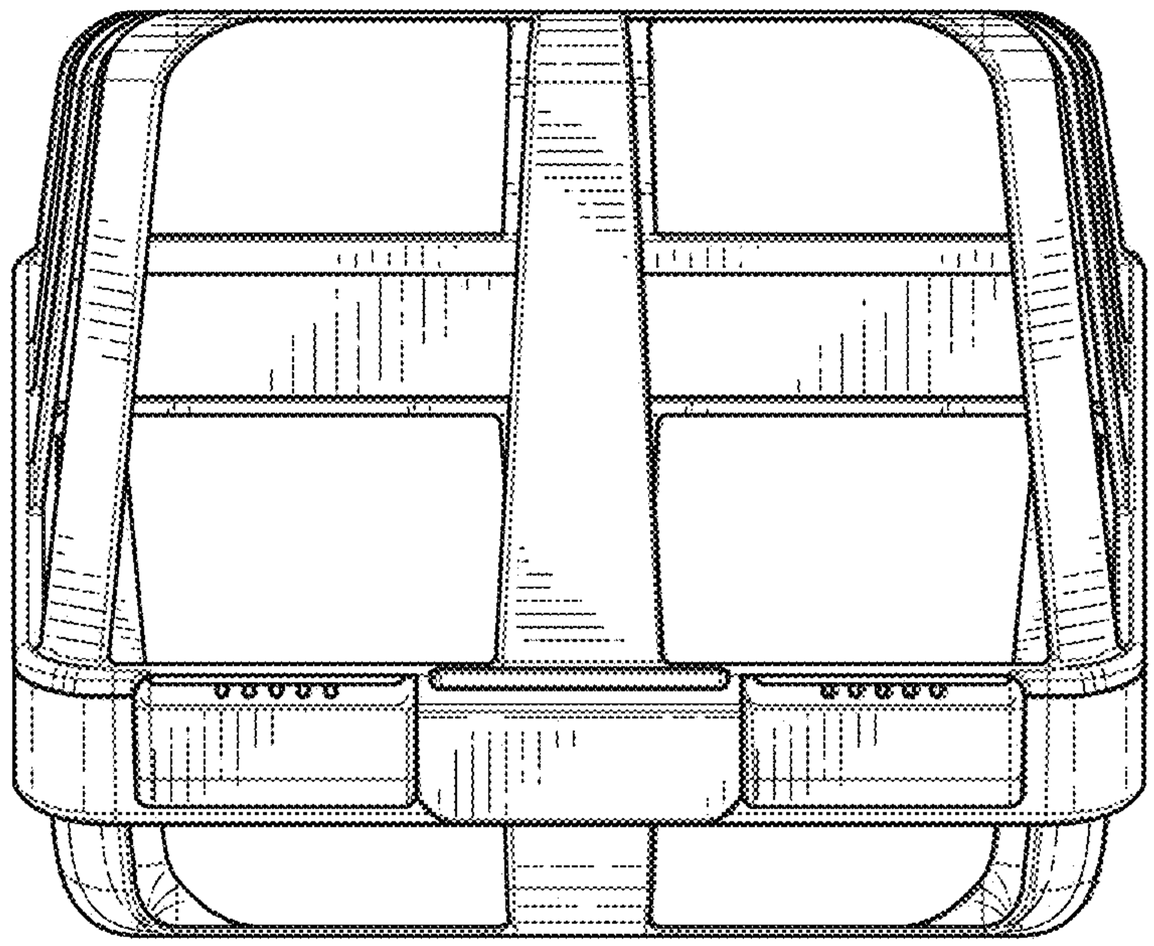

FIG. 2

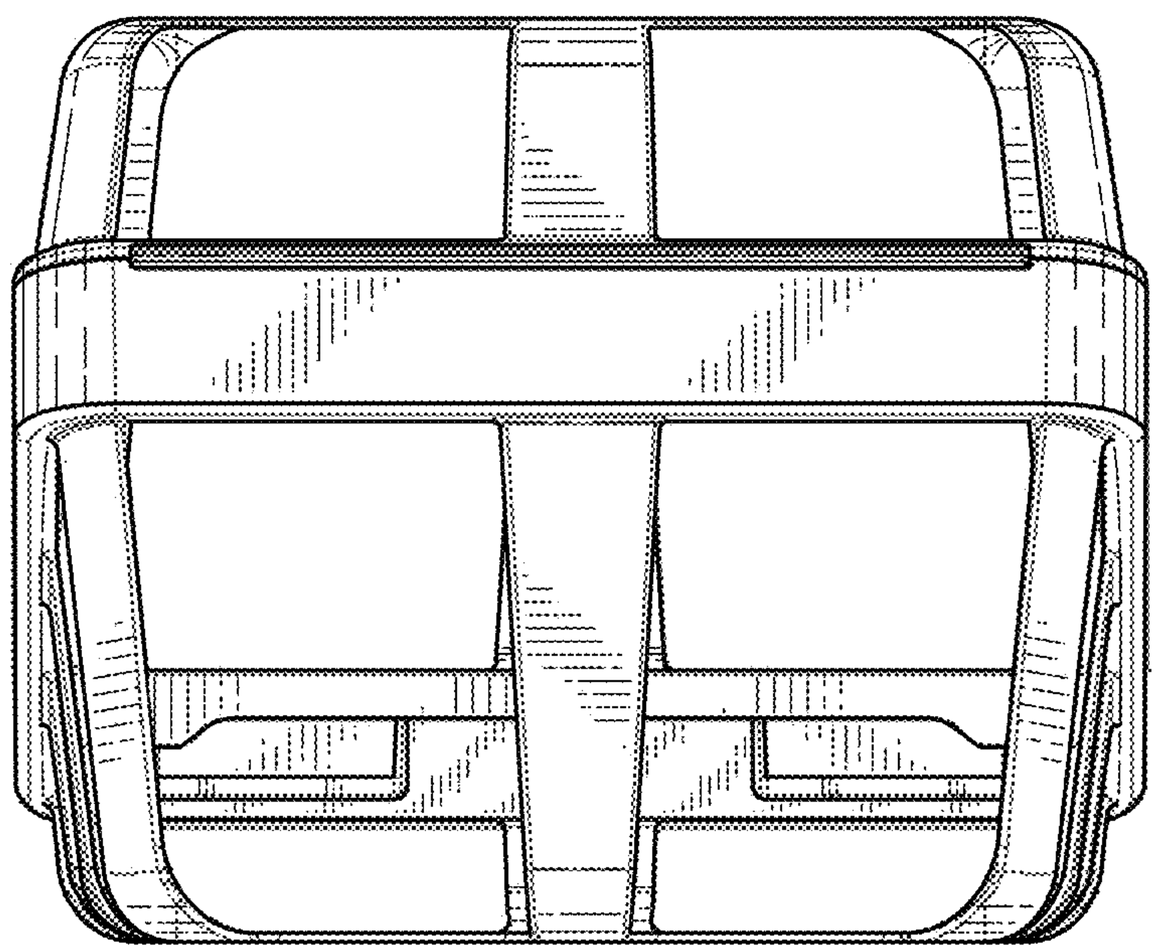

FIG. 3

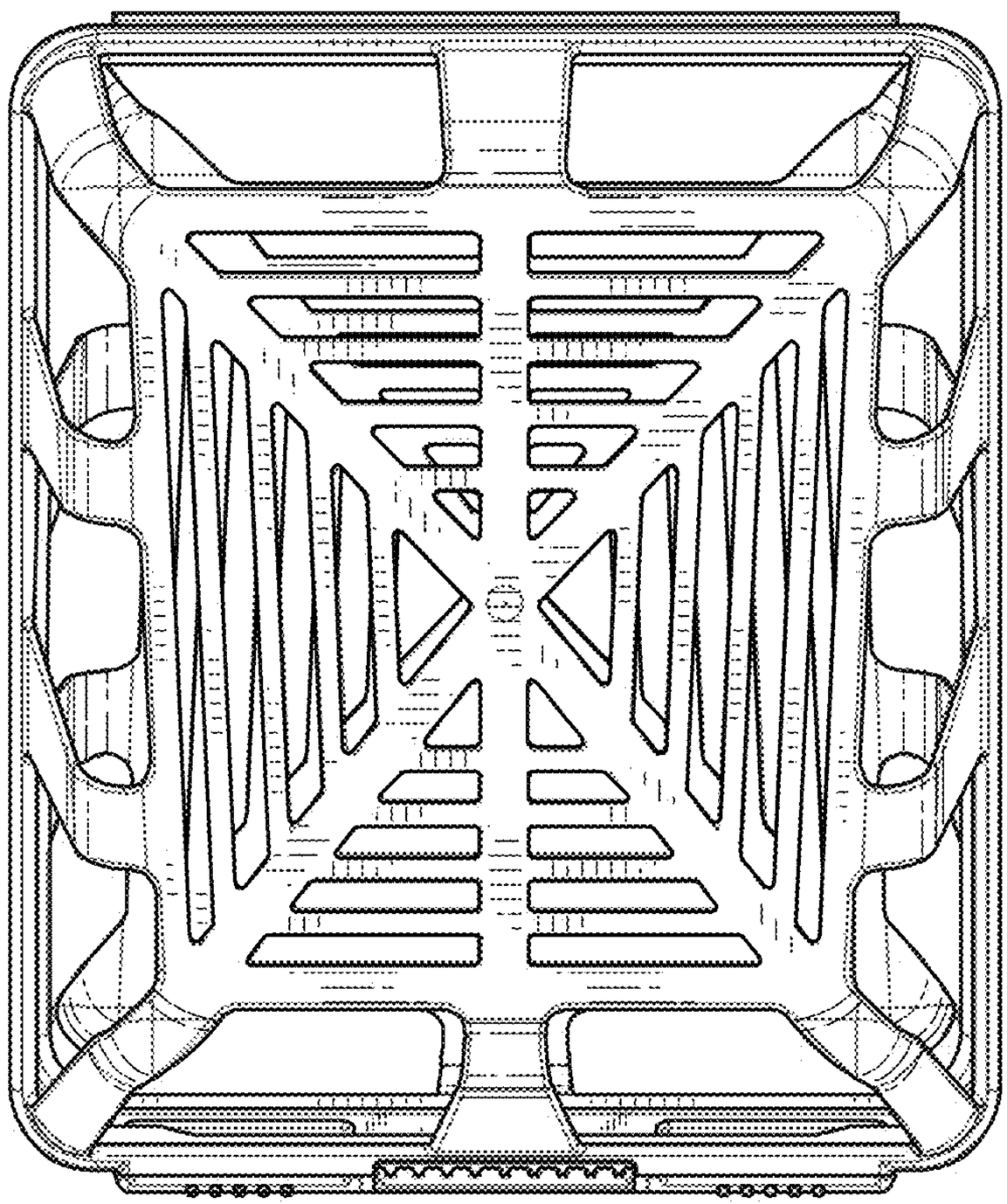

FIG. 4

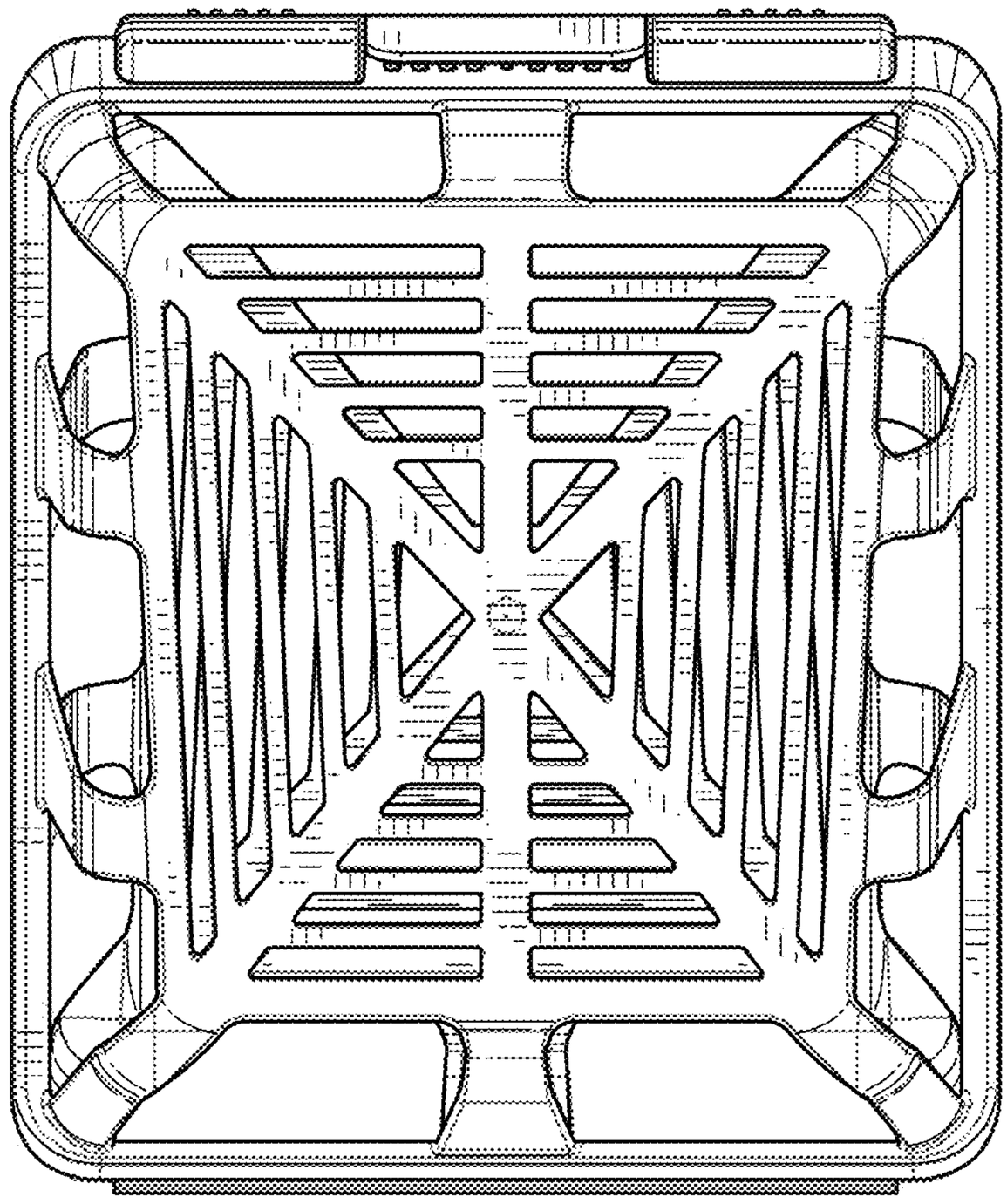

FIG. 5

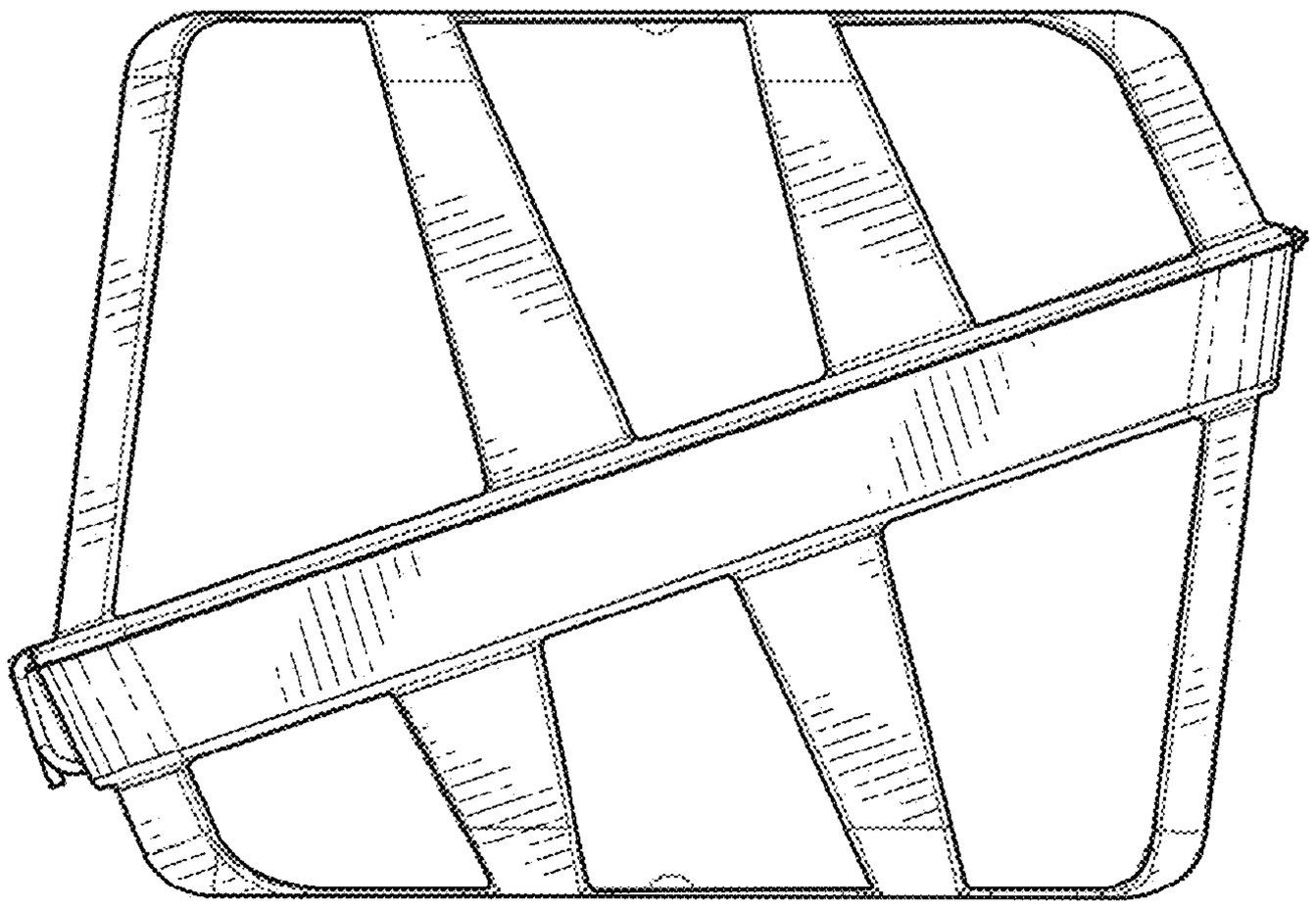

FIG. 6

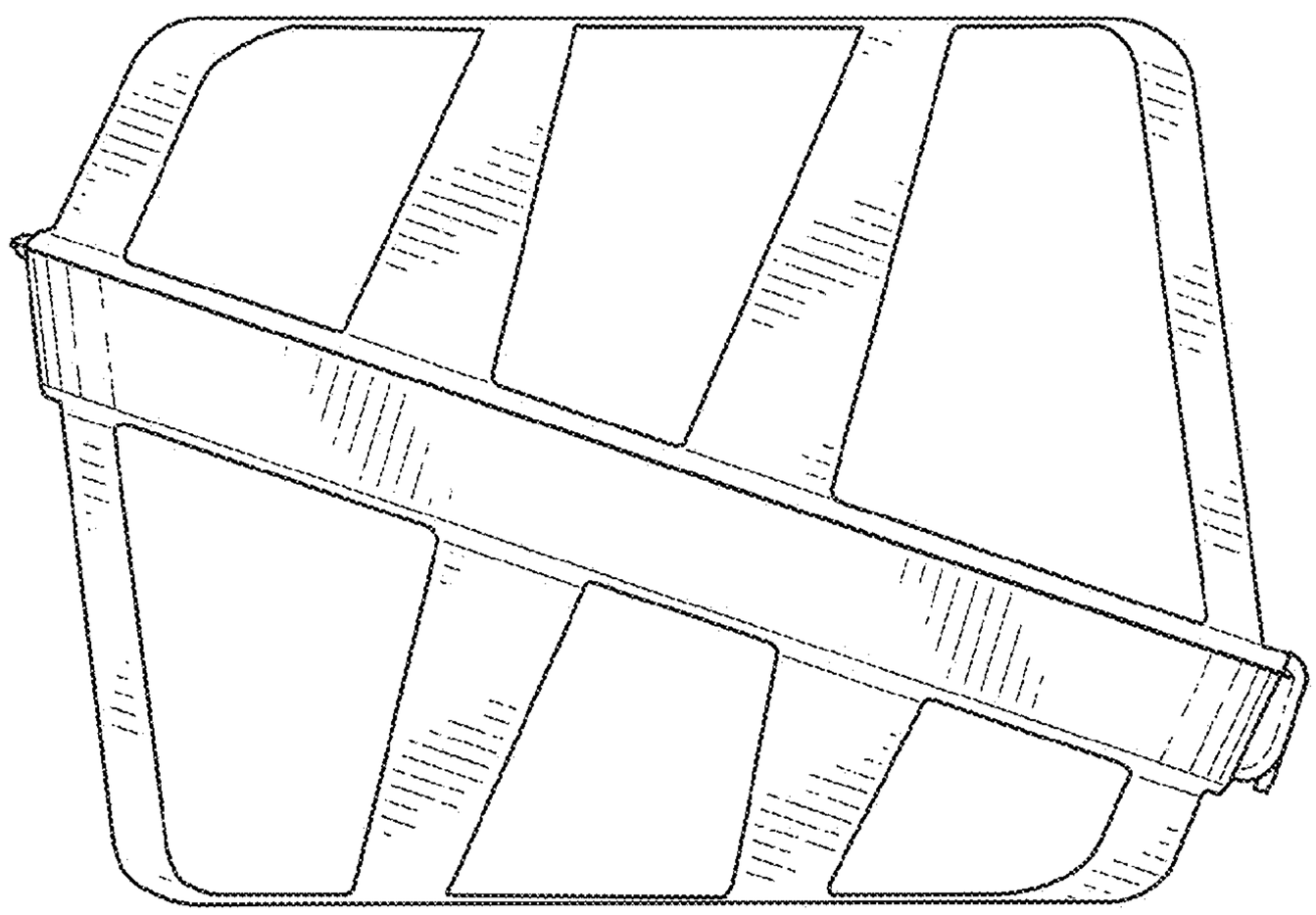

FIG. 7

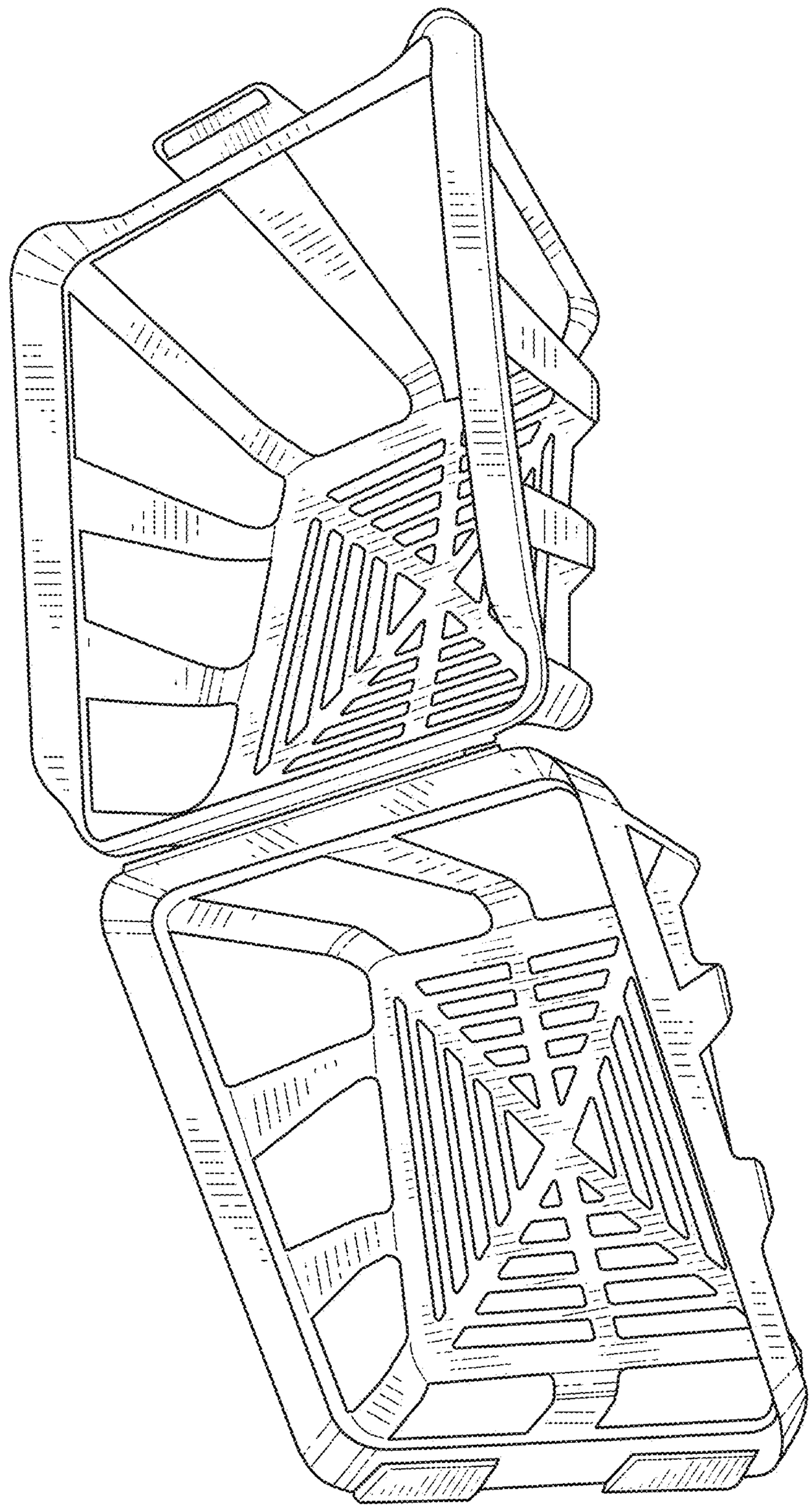

FIG. 8

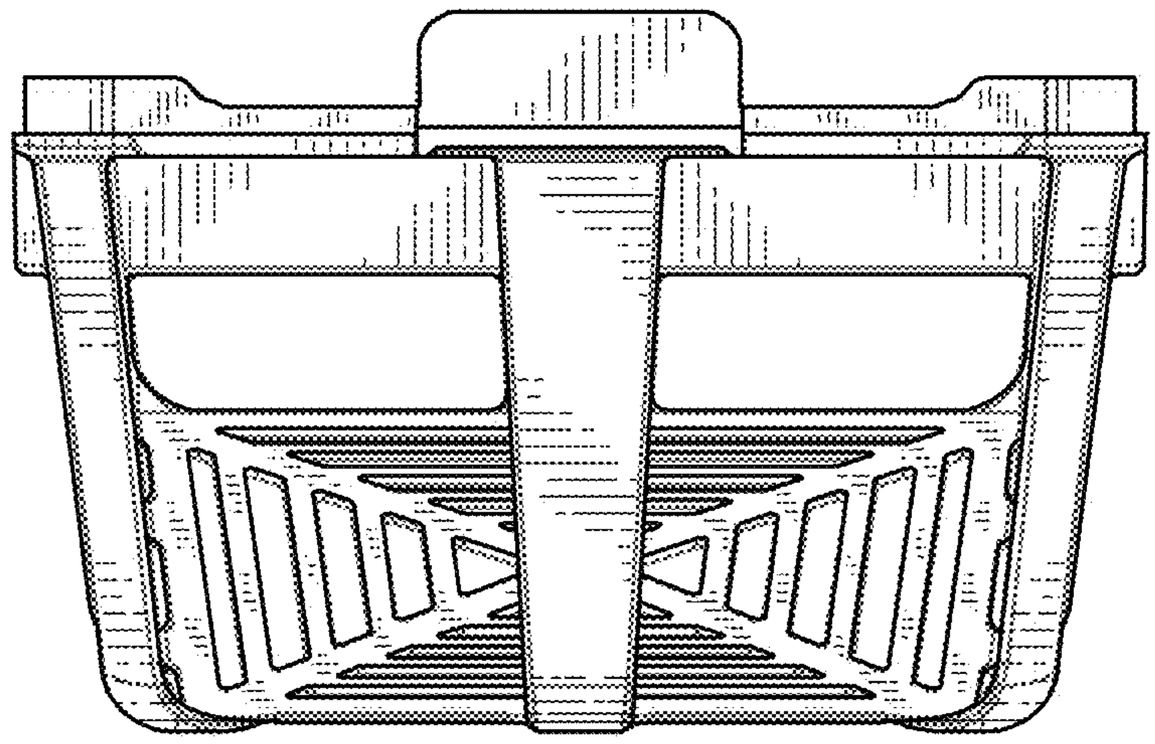

FIG. 9

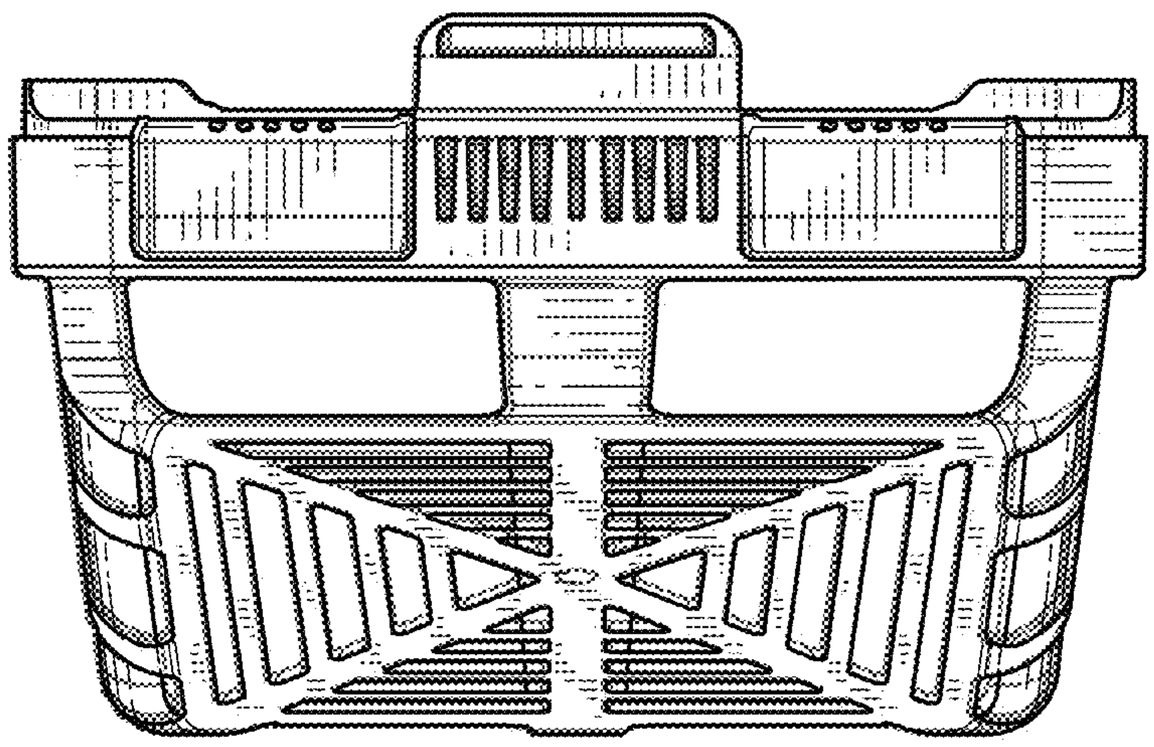

FIG. 10

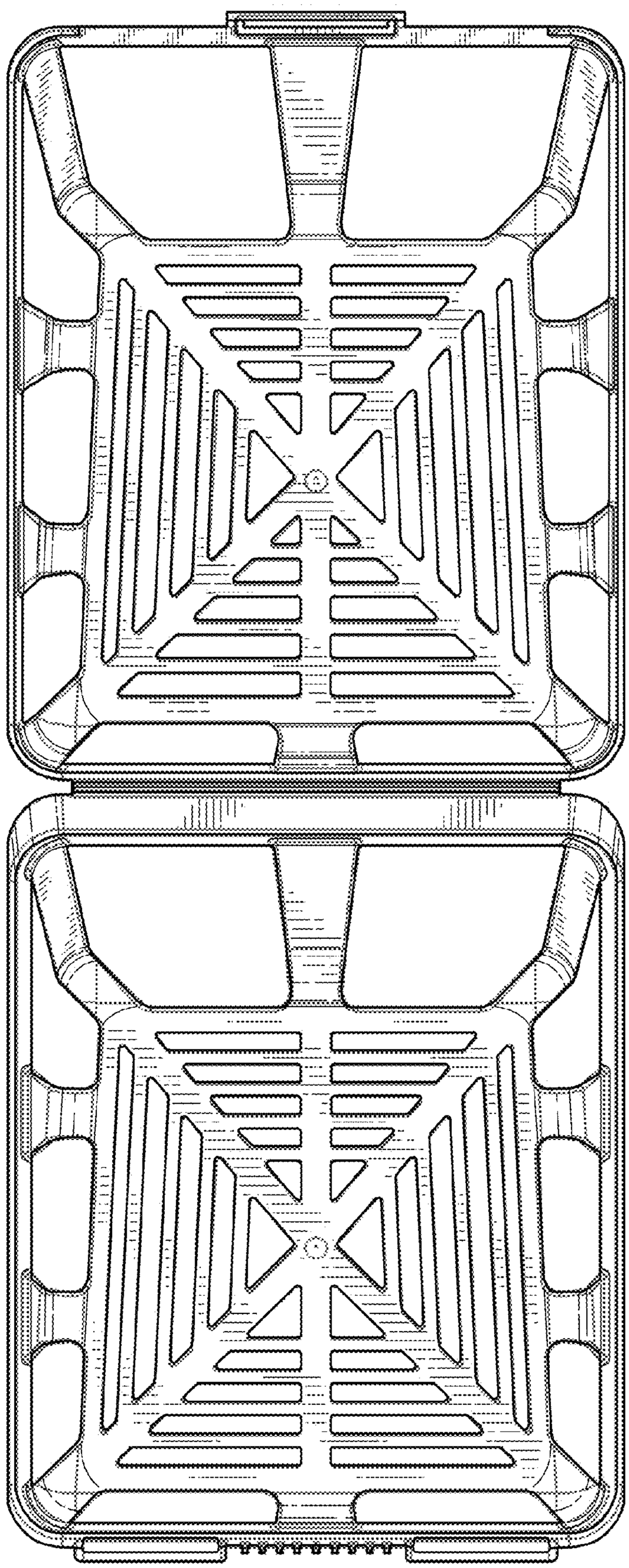

FIG. 11

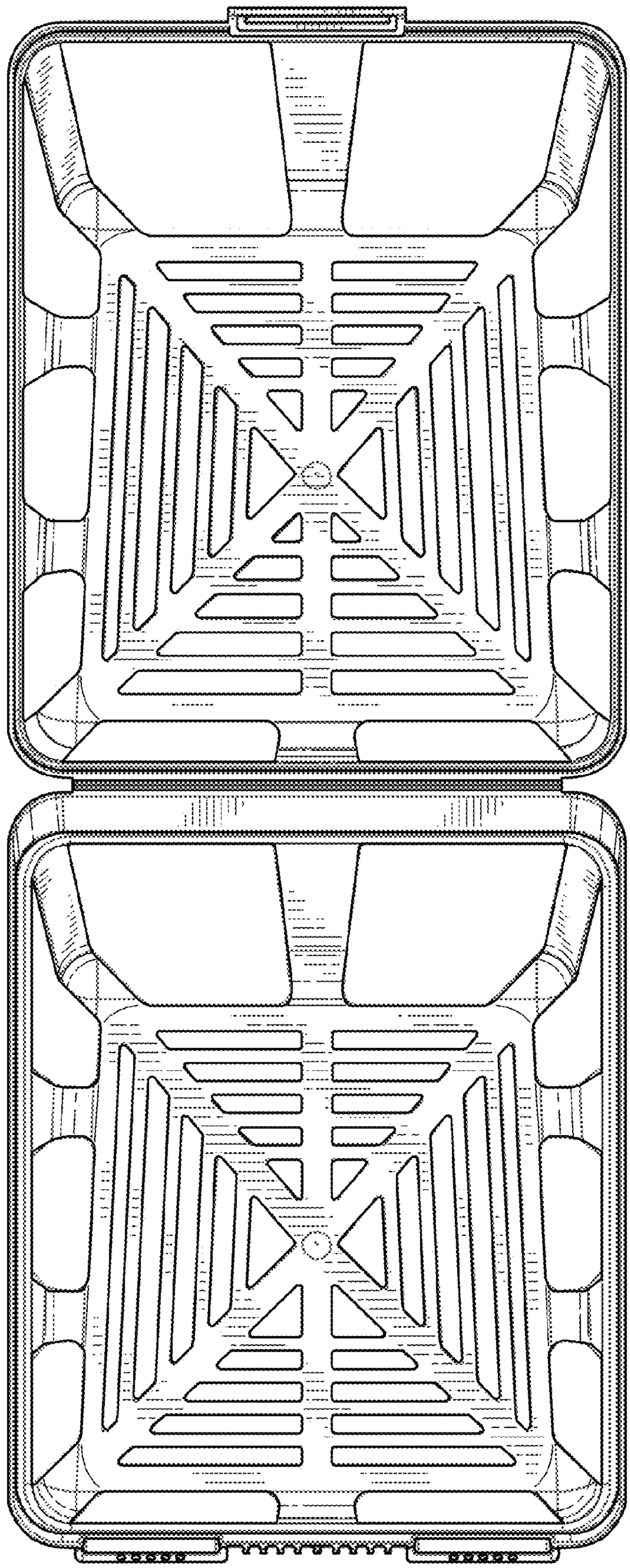

FIG. 12

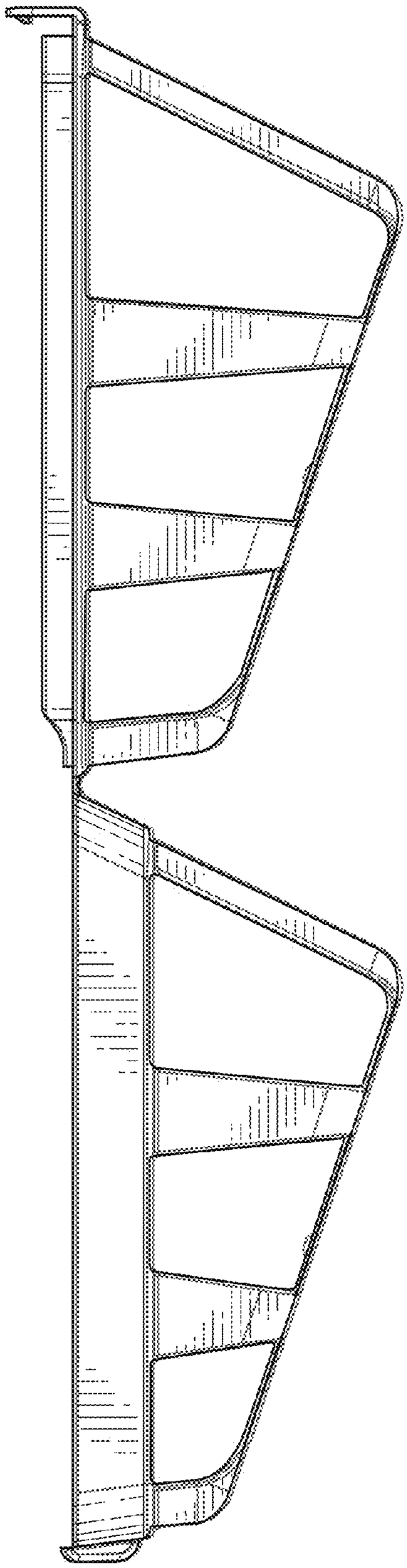

FIG. 13

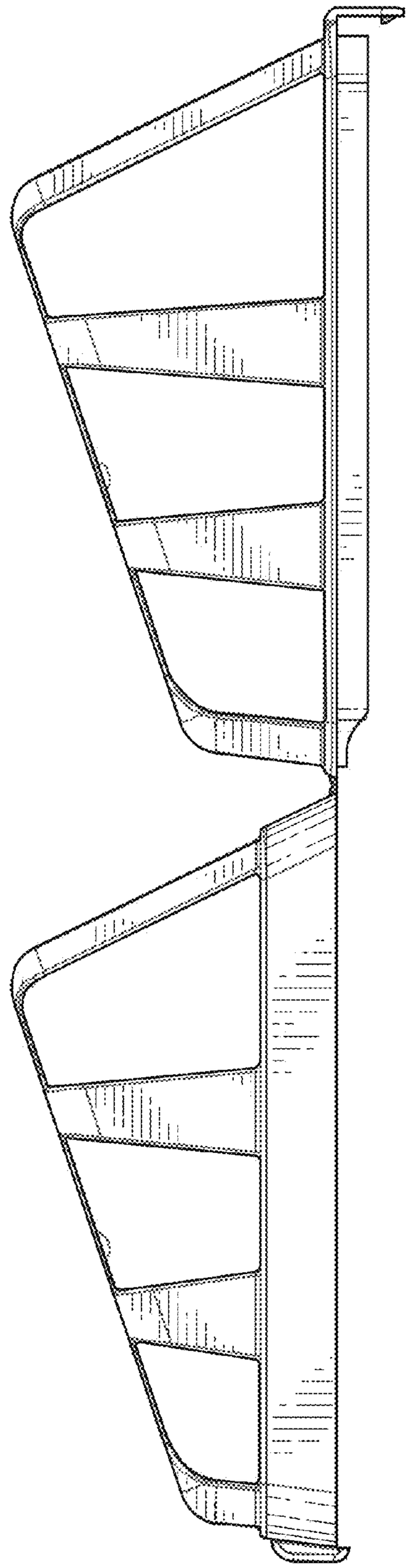

FIG. 14