US00D681836S

(12) United States Design Patent

Stephan et al.

(10) Patent No.: US D681,836 S
(45) Date of Patent: ** May 7, 2013

(54) **CONTAINER ASSEMBLY**

(75) Inventors: **Gary R. Stephan**, Seven Hills, OH (US); **Craig Saunders**, Rocky River, OH (US); **Evan Spirk**, Gates Mills, OH (US); **Jeffrey Kalman**, Cleveland Heights, OH (US); **David Boll**, Avon, OH (US); **Anthony S. Zuccaro**, Chesterland, OH (US)

(73) Assignee: **Abbott Laboratories**, Abbott Park, IL (US)

(**) Term: **14 Years**

(21) Appl. No.: **29/403,150**

(22) Filed: **Oct. 1, 2011**

Related U.S. Application Data

(63) Continuation-in-part of application No. 29/369,869, filed on Sep. 14, 2010.

(51) **LOC (9) Cl.** **07-01**

(52) **U.S. Cl.**
USPC **D24/197**

(58) **Field of Classification Search** D24/193–198; D9/500, 503–504, 547, 444–445, 454; D7/510–511, D7/533–534; 215/6, 10, 11.1–11.6, 12.1, 215/13.1, 255–256, 378; 220/703, 720
See application file for complete search history.

(56) **References Cited**

U.S. PATENT DOCUMENTS

1,174,828	A	3/1916	Copeland	
2,365,947	A	12/1944	Ganson	
2,766,022	A	10/1956	Bender	
3,113,569	A	12/1963	Barr et al.	
3,346,133	A *	10/1967	Herdman	215/11.1
3,411,648	A *	11/1968	Tichy	215/11.4
3,690,621	A	9/1972	Takanka et al.	
D252,068	S	6/1979	Lovely	
D292,966	S	12/1987	Gager	
4,718,447	A	1/1988	Marshall	
D294,735	S	3/1988	Morano et al.	
D302,793	S	8/1989	Yamaguchi	
4,893,940	A	1/1990	Waisberg	
4,893,941	A	1/1990	Wayte	
D306,071	S	2/1990	Klitsner	
4,979,629	A	12/1990	Askerneese	
D313,529	S	1/1991	Bormioli	
D316,100	S	4/1991	Kief	
D317,129	S	5/1991	Beranek et al.	
D320,938	S	10/1991	Stallings	
D327,015	S	6/1992	Stallings	
D330,938	S	11/1992	Sakashita	
5,199,788	A	4/1993	Stallings	

(Continued)

OTHER PUBLICATIONS

http://www.babyfeedingbottleshelp.com/, Mar. 13, 2012.

(Continued)

Primary Examiner — Susan E Krakower
(74) *Attorney, Agent, or Firm* — McAndrews, Held & Malloy, Ltd.

(57) **CLAIM**

The ornamental design for a container assembly, as shown and described.

DESCRIPTION

FIG. **1** is a perspective view of a container assembly showing our new design;
FIG. **2** is a left side elevation view thereof;
FIG. **3** is a right side elevation view thereof;
FIG. **4** is a front elevation view thereof, the rear elevation is mirror image;
FIG. **5** is a is a top view thereof; and,
FIG. **6** is a bottom view thereof.

1 Claim, 4 Drawing Sheets

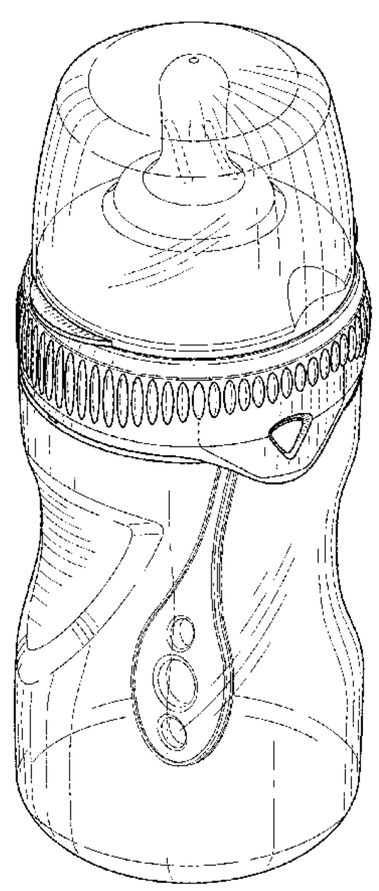

U.S. PATENT DOCUMENTS

D339,197 S 9/1993 Ziegler
D348,836 S 7/1994 McCallum et al.
D356,160 S 3/1995 Cautereels
5,419,445 A * 5/1995 Kaesemeyer 215/11.1
D364,256 S 11/1995 Breen et al.
D365,021 S 12/1995 Park
5,472,274 A 12/1995 Baillie
D370,411 S 6/1996 Vernon, IV
D371,304 S 7/1996 Onneweer
5,544,766 A 8/1996 Dunn et al.
5,588,548 A 12/1996 Brankley
5,626,256 A 5/1997 Onneweer
D386,407 S 11/1997 Gutting et al.
5,695,282 A 12/1997 Hess
5,881,893 A 3/1999 Manganiello
5,894,965 A 4/1999 Robbins, III et al.
D413,799 S 9/1999 Schlatter
D420,448 S * 2/2000 Brown et al. D24/197
D423,107 S 4/2000 Brown et al.
D426,742 S 6/2000 Gartz et al.
D433,337 S 11/2000 Cautereels
D435,108 S 12/2000 Chomik et al.
D436,862 S 1/2001 Witt et al.
RE37,137 E 4/2001 Ghidini
D441,086 S 4/2001 Morano
D441,087 S 4/2001 Johansen et al.
D441,247 S 5/2001 Beam
D441,870 S 5/2001 Randolph
D442,087 S 5/2001 Walls
D442,435 S * 5/2001 Takagi D7/510
6,224,253 B1 5/2001 Dixon
D444,239 S 6/2001 Kobayashi et al.
6,257,428 B1 * 7/2001 Caola 215/11.1
D450,387 S 11/2001 Gaona
D451,392 S 12/2001 Kitamura et al.
D451,393 S 12/2001 Gerhart et al.
D459,815 S 7/2002 Pastucha
D460,825 S 7/2002 Renz
6,419,385 B1 7/2002 Walls
6,439,380 B1 8/2002 Welsh
D463,280 S 9/2002 Brozell
D463,567 S 9/2002 Morano
D464,434 S 10/2002 Morano
D465,028 S 10/2002 Renz
6,484,895 B2 11/2002 Montgomery et al.
6,508,379 B1 * 1/2003 Van De Pol-Klein Nagelvoort et al. 220/714
D470,050 S 2/2003 Renz et al.
D470,593 S 2/2003 Iodice
D478,669 S 8/2003 Wear
6,616,319 B2 * 9/2003 Renz 366/130
D486,579 S 2/2004 Dunn
D486,996 S 2/2004 Karp
D488,560 S 4/2004 Renz et al.
D489,261 S 5/2004 Doelling
6,769,800 B1 8/2004 Young
D496,733 S * 9/2004 Morano et al. D24/197
D497,672 S * 10/2004 Renz D24/197
6,877,891 B2 4/2005 Hu
D504,725 S 5/2005 Randolph et al.
D511,836 S * 11/2005 Morano et al. D24/197
D513,181 S 12/2005 Bloom et al.
6,978,908 B2 * 12/2005 Morano et al. 215/396
D516,911 S 3/2006 Bloom et al.
D525,523 S 7/2006 King
D528,660 S 9/2006 Lornage
7,150,370 B2 * 12/2006 Pyun 215/11.5
D538,939 S * 3/2007 Conaway et al. D24/197
7,185,766 B2 3/2007 Cooper
D539,650 S 4/2007 Smith et al.
D545,623 S * 7/2007 Renz et al. D7/510
D546,463 S 7/2007 Potvin
D555,795 S 11/2007 Mallet
D566,551 S 4/2008 Pettigrew et al.
D572,586 S 7/2008 Medema
D577,583 S 9/2008 Porter et al.
D582,271 S 12/2008 Vogel
D583,234 S 12/2008 Lohrman et al.
D590,950 S 4/2009 Driver et al.
7,513,678 B2 4/2009 Venus
D591,557 S 5/2009 Bodum
D592,954 S 5/2009 Capretta et al.
D595,417 S * 6/2009 Driver et al. D24/197
D599,028 S 8/2009 Schofield
D602,775 S 10/2009 Shale
D603,261 S 11/2009 Arnell et al.
D609,093 S 2/2010 Wisniewski et al.
D609,528 S * 2/2010 Roehrig et al. D7/510
D610,454 S 2/2010 Lohrman et al.
D614,954 S 5/2010 Crowell et al.
D615,399 S 5/2010 Bran
D616,747 S 6/2010 Stull et al.
D623,060 S 9/2010 Hassamanci
D624,414 S 9/2010 Benoit-Gonin et al.
D625,424 S 10/2010 MacKay et al.
D627,641 S 11/2010 Mazurkiewicz et al.
D628,890 S 12/2010 Groubert et al.
D630,093 S 1/2011 Bardet
D630,334 S 1/2011 Paige
D634,192 S 3/2011 Mueller
D634,198 S 3/2011 Groubert et al.
D635,683 S 4/2011 Shaikh et al.
D635,684 S 4/2011 Shaikh et al.
D637,300 S 5/2011 Yamashita et al.
D639,969 S 6/2011 Pukall et al.
D639,970 S 6/2011 Pukall et al.
D640,101 S 6/2011 Clark, Jr. et al.
D641,887 S 7/2011 Sirota
D642,434 S 8/2011 Schofield et al.
D644,334 S 8/2011 Py
8,020,507 B2 * 9/2011 Strong 116/308
D649,878 S 12/2011 Weiss
D650,672 S 12/2011 Krallmann
D652,938 S 1/2012 Py et al.
D655,166 S 3/2012 Arand et al.
D655,818 S 3/2012 Roehrig
2004/0026351 A1 2/2004 Dunn et al.
2004/0099544 A1 5/2004 Ness et al.
2004/0124168 A1 7/2004 Silver
2010/0096395 A1 4/2010 Miller

OTHER PUBLICATIONS

http://www.alibaba.com/product-gs/340931498/silicone_feeding_bottle.html, Mar. 13, 2012.
http://www.alibaba.com/product-free/107193305/Baby_Feeding_Bottles.html, Mar. 13, 2012.
http://green-bebe.com/blog/2008/05/27/green-to-grow-baby-bottles-are-now-available/, Mar. 13, 2012.
http://www.chinababybottle.com/news_info/borosilicate-glass-baby-feeding-bottle-n10946.html, Mar. 13, 2012.
http://www.greatgreenbaby.com/tough-safe-cute-stainless-steel-baby-bottle/, Mar. 13, 2012.
http://www.sears.com/shc/s/p_10153_12605_SPM5884866007P?i_cntr=1331536943517, Mar. 13, 2012.
http://www.ttnet.net/ttnet/gotoprd/MB115/020/0/151303235383434333.htm, Mar. 13, 2012.
http://www.iplaywholesale.com/index.php/greensprouts/feeding/food-prep-storage/water-bottle-capadaptor.html, Mar. 13, 2012.
http://www.greentogrow.com/product.aspx?productID=CAPREG, Mar. 13, 2012.
http://www.aventcoupons.org/avent-bottle-adapter-ring/, Mar. 13, 2012.
http://www.magicbaby.pl/81-smoczek-do-butelki-wolny-1m-philips-avent-scf632-27.html, Mar. 13, 2012.
http://www.petitbliss.com/shop/product.php?sku=28104&cat=2703&page=1, Mar. 13, 2012.
http://garagelelong.wordpress.com/2008/10/31/brand-new-baby-milk-bottles/, Mar. 13, 2012.

* cited by examiner

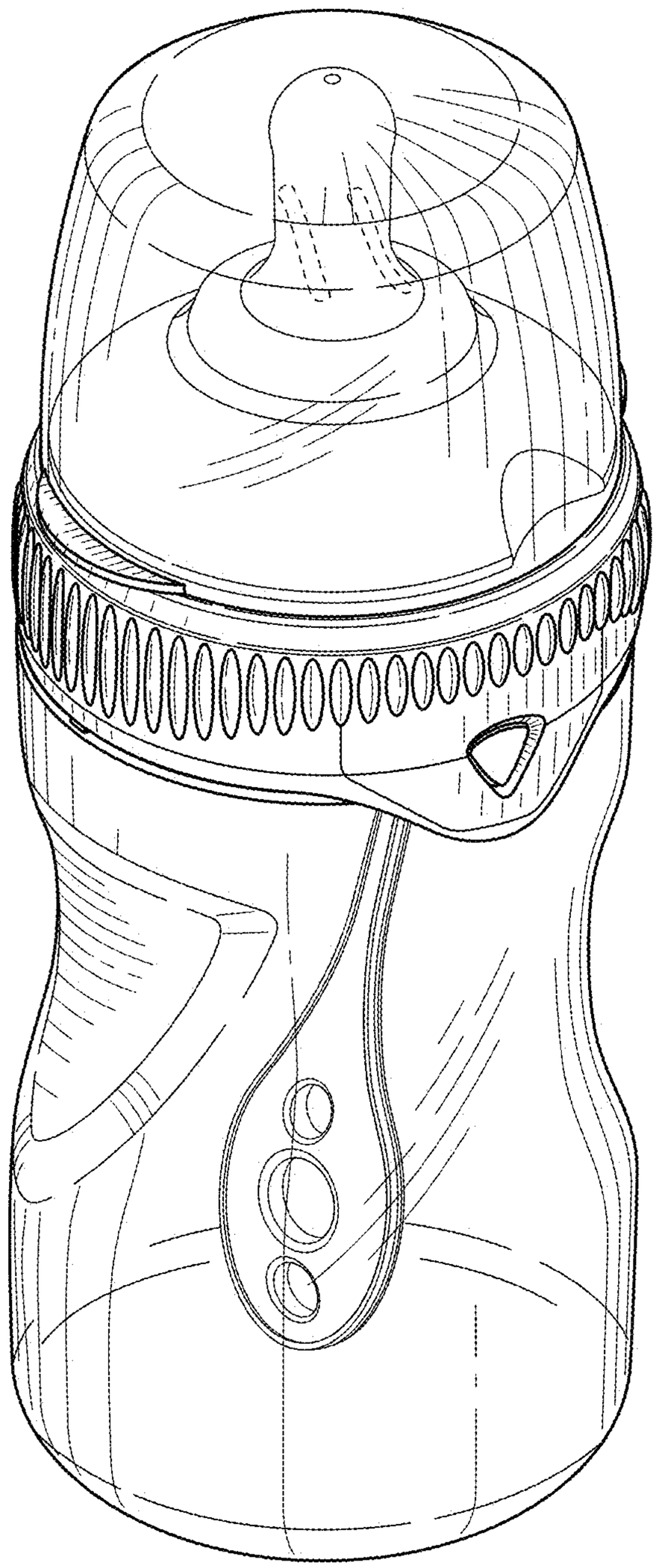

FIG. 1

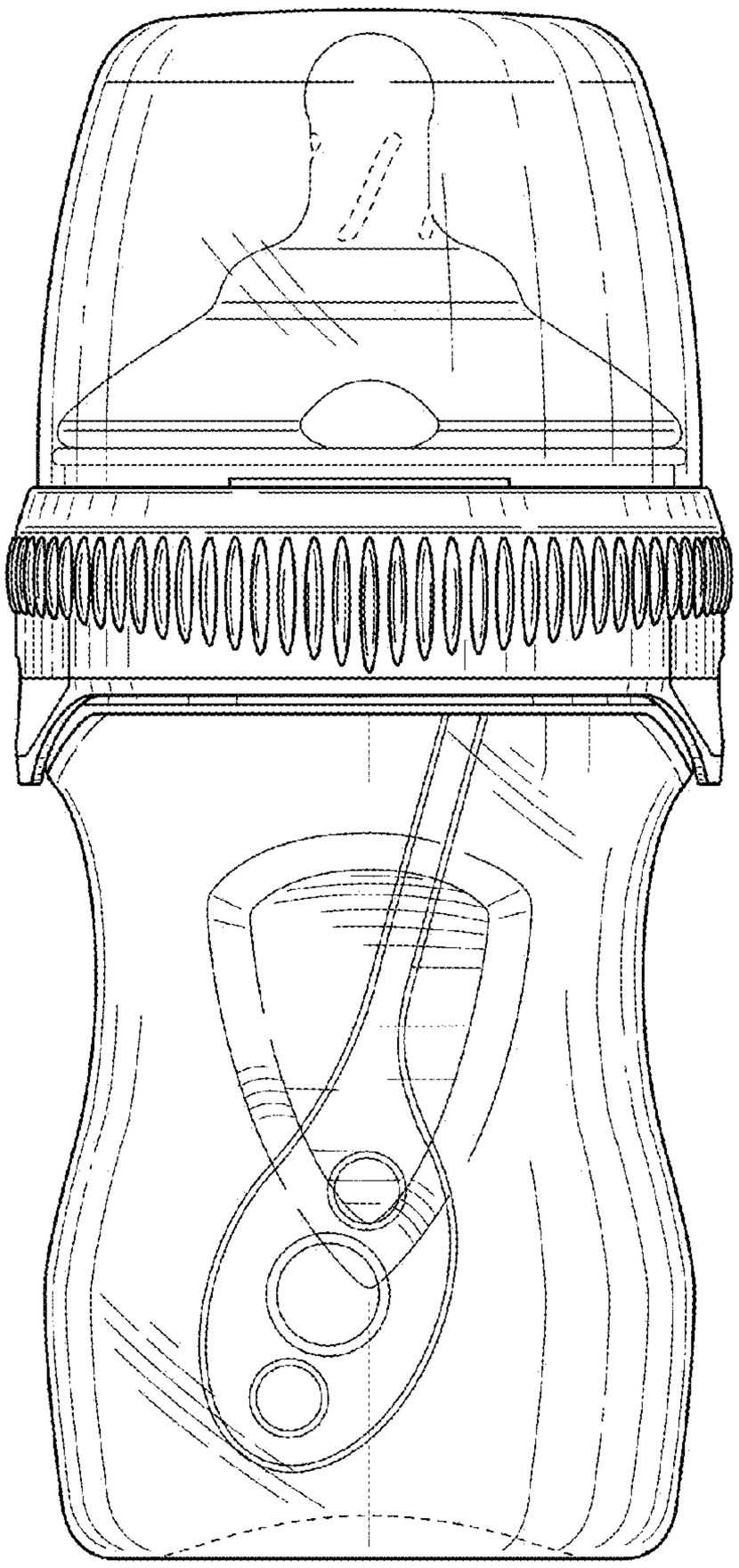

FIG. 2

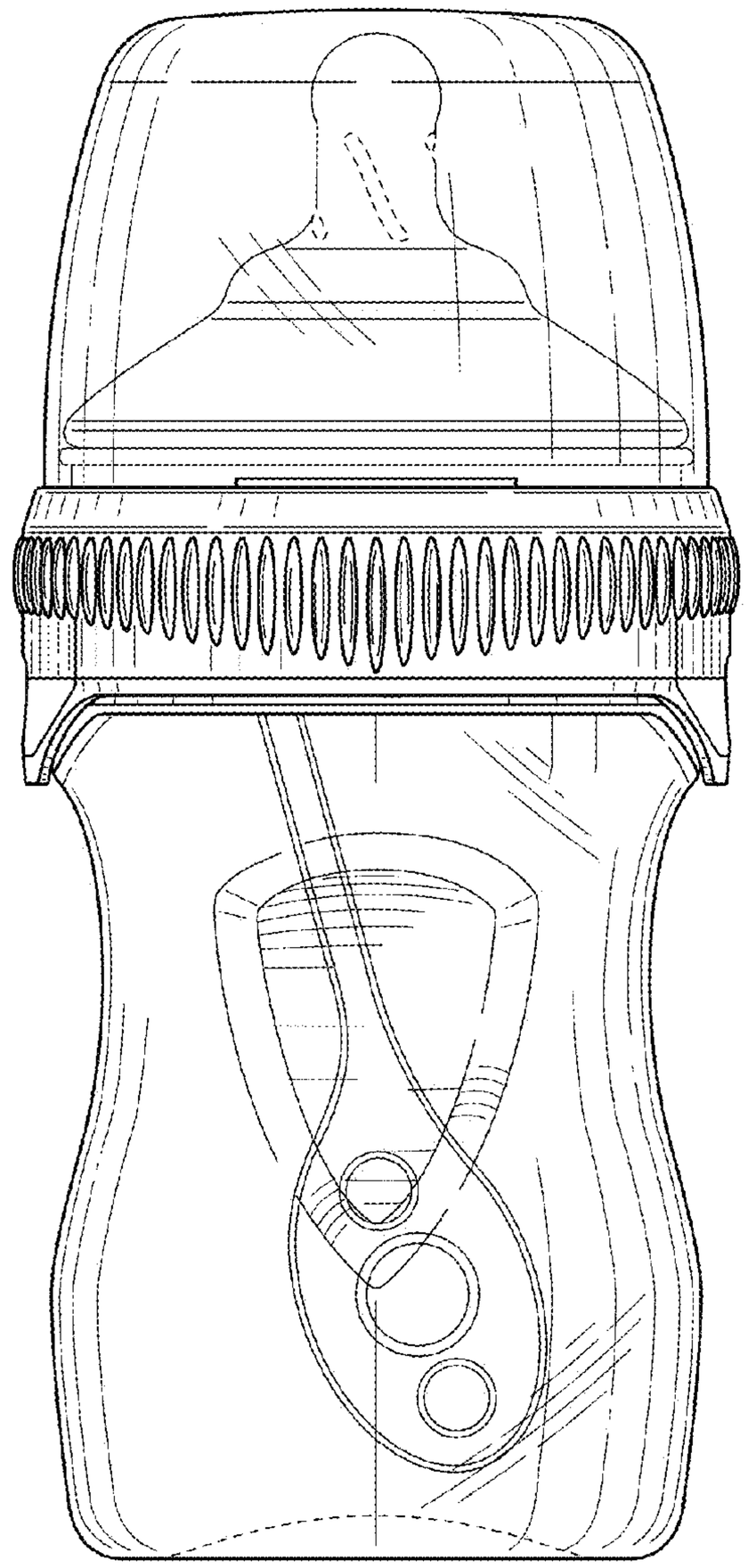

FIG. 3

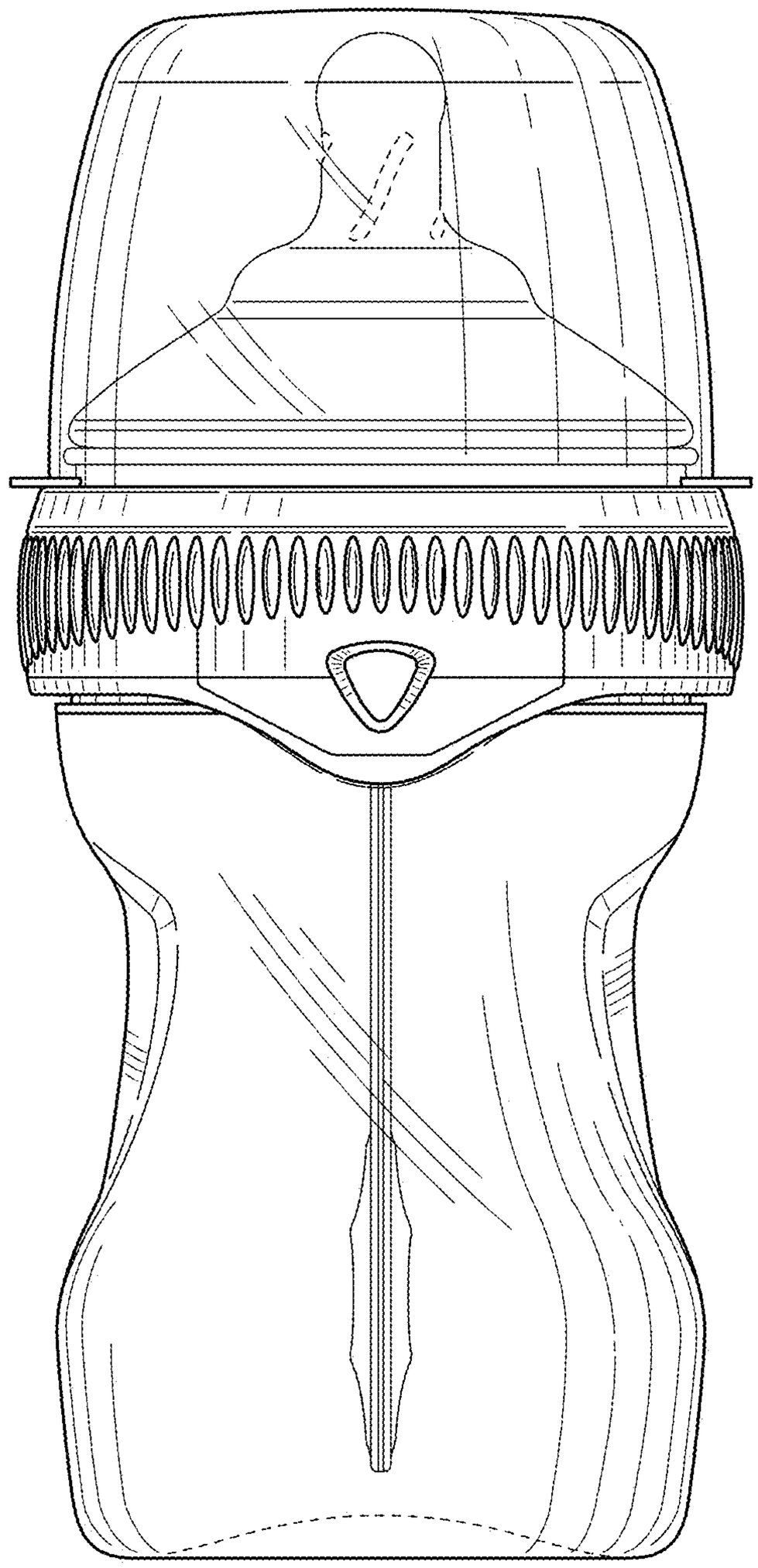

FIG. 4

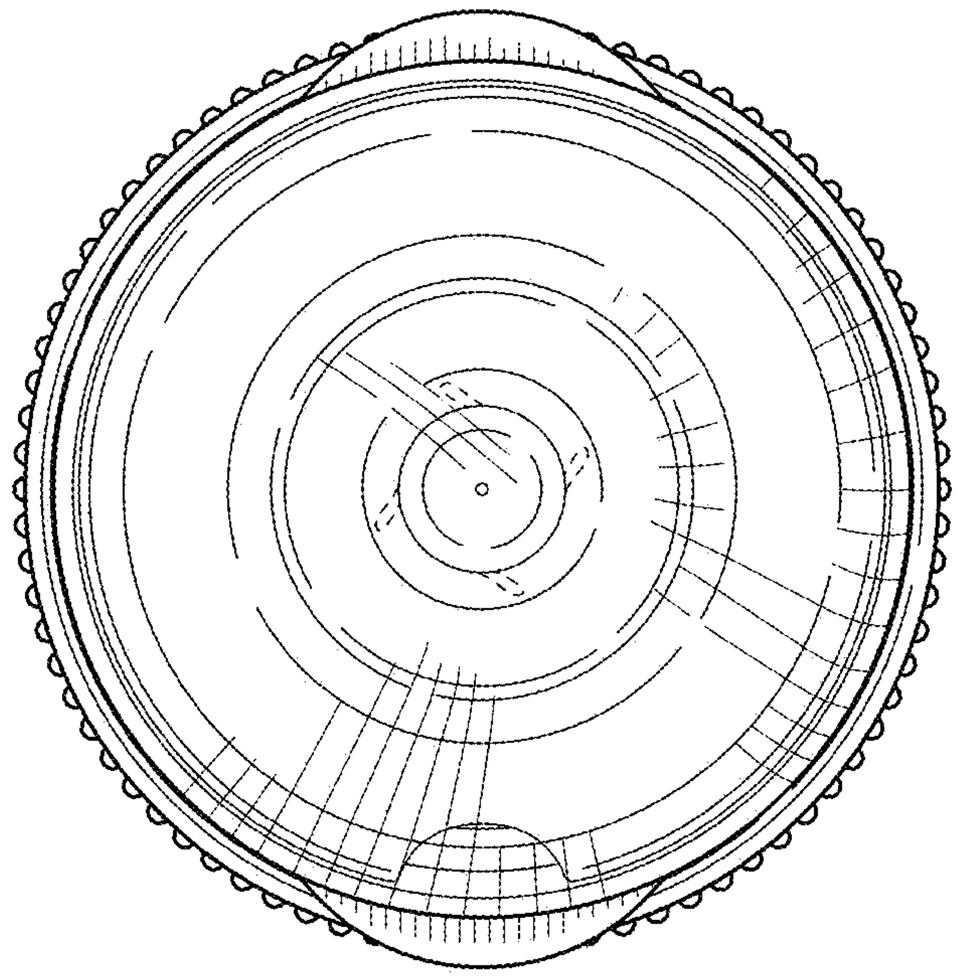

FIG. 5

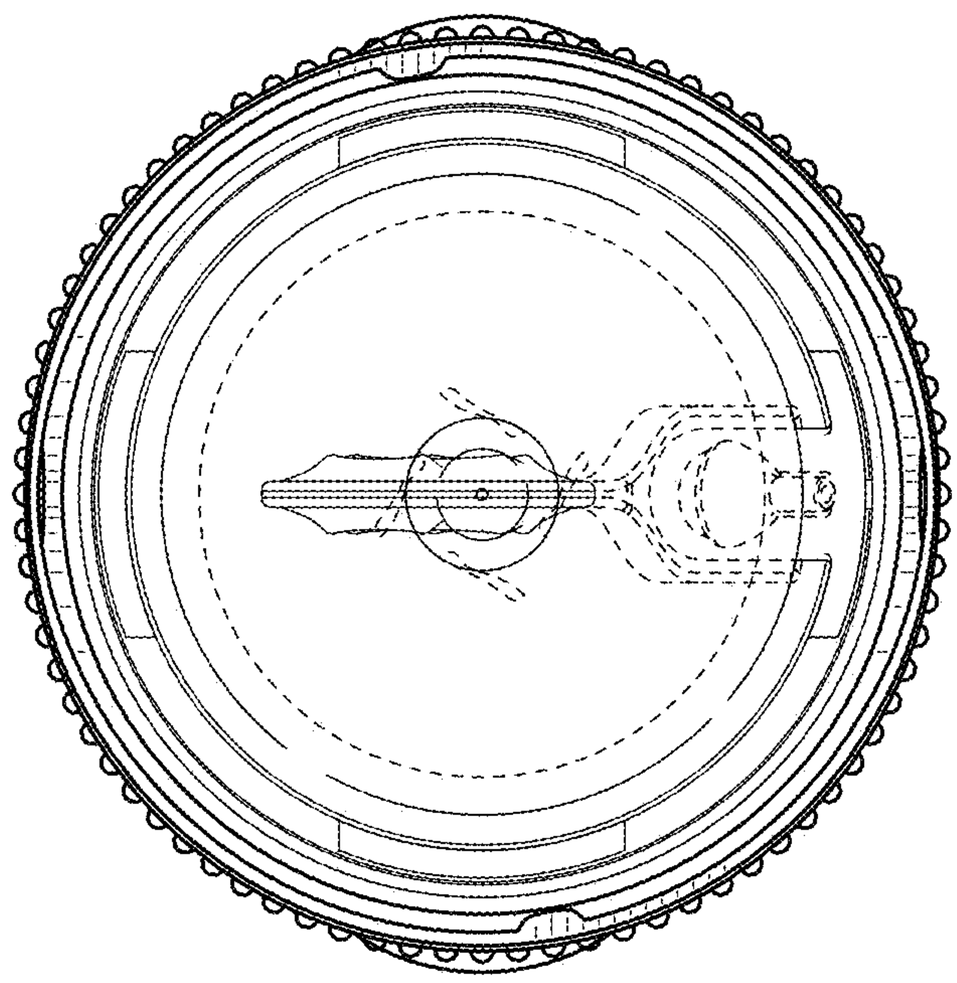

FIG. 6