US00D681791S

(12) United States Design Patent
Jörgensen

(10) Patent No.: US D681,791 S
(45) Date of Patent: ** May 7, 2013

(54) **AROMA DIFFUSER**

(75) Inventor: **Carsten Jörgensen**, Kastanienbaum (CH)

(73) Assignee: **Ming Jen Hsiao**, Miaoli County (TW)

(**) Term: **14 Years**

(21) Appl. No.: **29/430,606**

(22) Filed: **Aug. 28, 2012**

(51) **LOC (9) Cl.** **28-99**

(52) **U.S. Cl.**
USPC **D23/366**

(58) **Field of Classification Search** ..... D23/355–369; D28/5, 6; 261/DIG. 17, DIG. 42, DIG. 65, 261/DIG. 88, DIG. 89, DIG. 47, DIG. 55, 261/DIG. 70; 392/356, 390, 392, 394, 395; 239/34, 44, 53, 55, 56, 326, 60, 308; D9/687; D7/591
See application file for complete search history.

(56) **References Cited**

U.S. PATENT DOCUMENTS

D270,468 S * 9/1983 Hoyt D23/369
D275,222 S * 8/1984 Hoyt D23/369
D280,757 S * 9/1985 Paulovich et al. D23/207
D384,451 S * 9/1997 Leu D32/29.1
D392,032 S * 3/1998 Zaragoza et al. D23/369
D454,190 S * 3/2002 Trocola D23/366
6,435,694 B1 * 8/2002 Bell et al. 362/161
D535,376 S * 1/2007 Michaels et al. D23/366
D544,084 S * 6/2007 Michaels et al. D23/366
D614,277 S * 4/2010 Hsiao D23/366
D621,494 S * 8/2010 Li D23/366
D621,495 S * 8/2010 Li D23/366
D622,835 S * 8/2010 Mendheim D23/364
D650,056 S * 12/2011 Li D23/366
D662,581 S * 6/2012 Savegnago D23/366

* cited by examiner

Primary Examiner — Sandra Snapp
(74) *Attorney, Agent, or Firm* — Ming Chow; Sinorica, LLC

(57) **CLAIM**

The ornamental design for an aroma diffuser, as shown.

DESCRIPTION

FIG. **1** is a perspective view of an aroma diffuser showing my new design;
FIG. **2** is a front view, the rear view being a mirror image thereof;
FIG. **3** is a left side view, the right side view being a mirror image thereof;
FIG. **4** is a top view thereof; and,
FIG. **5** is a bottom view thereof.

1 Claim, 5 Drawing Sheets

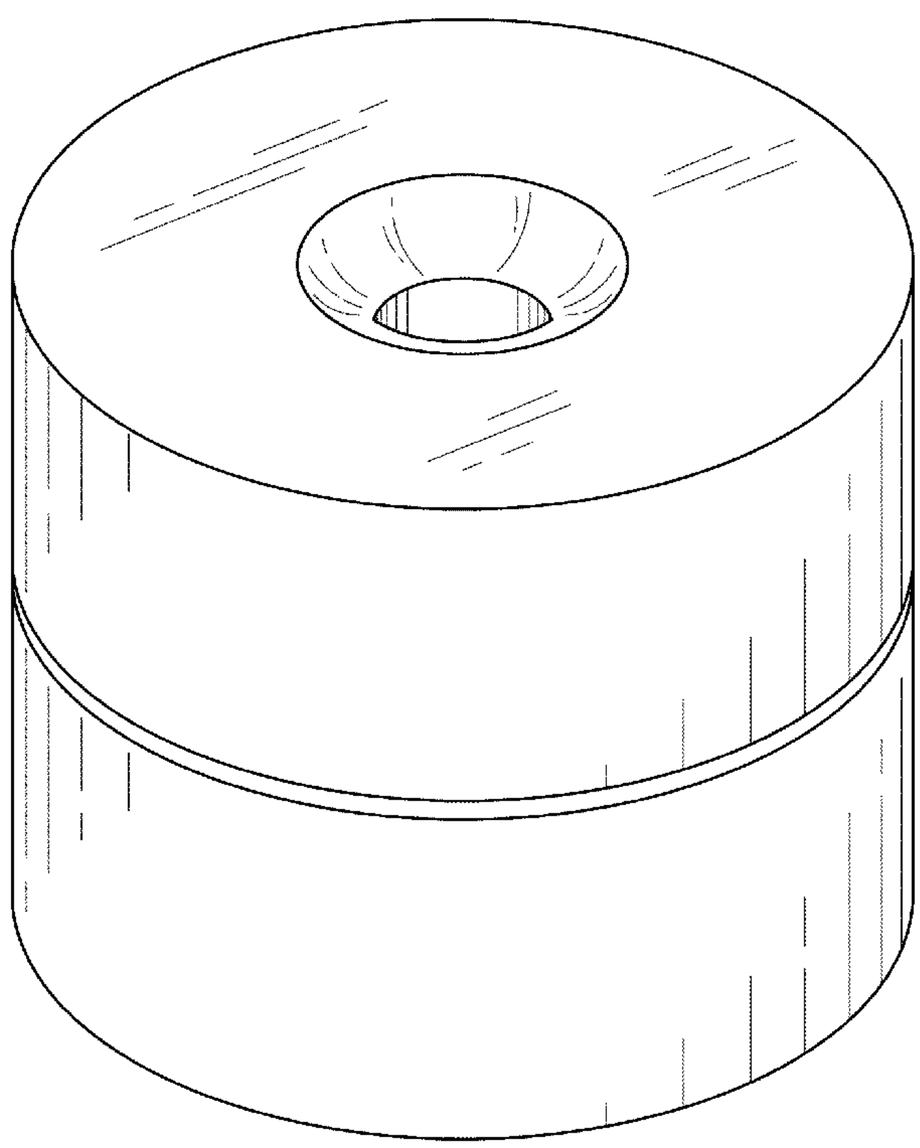

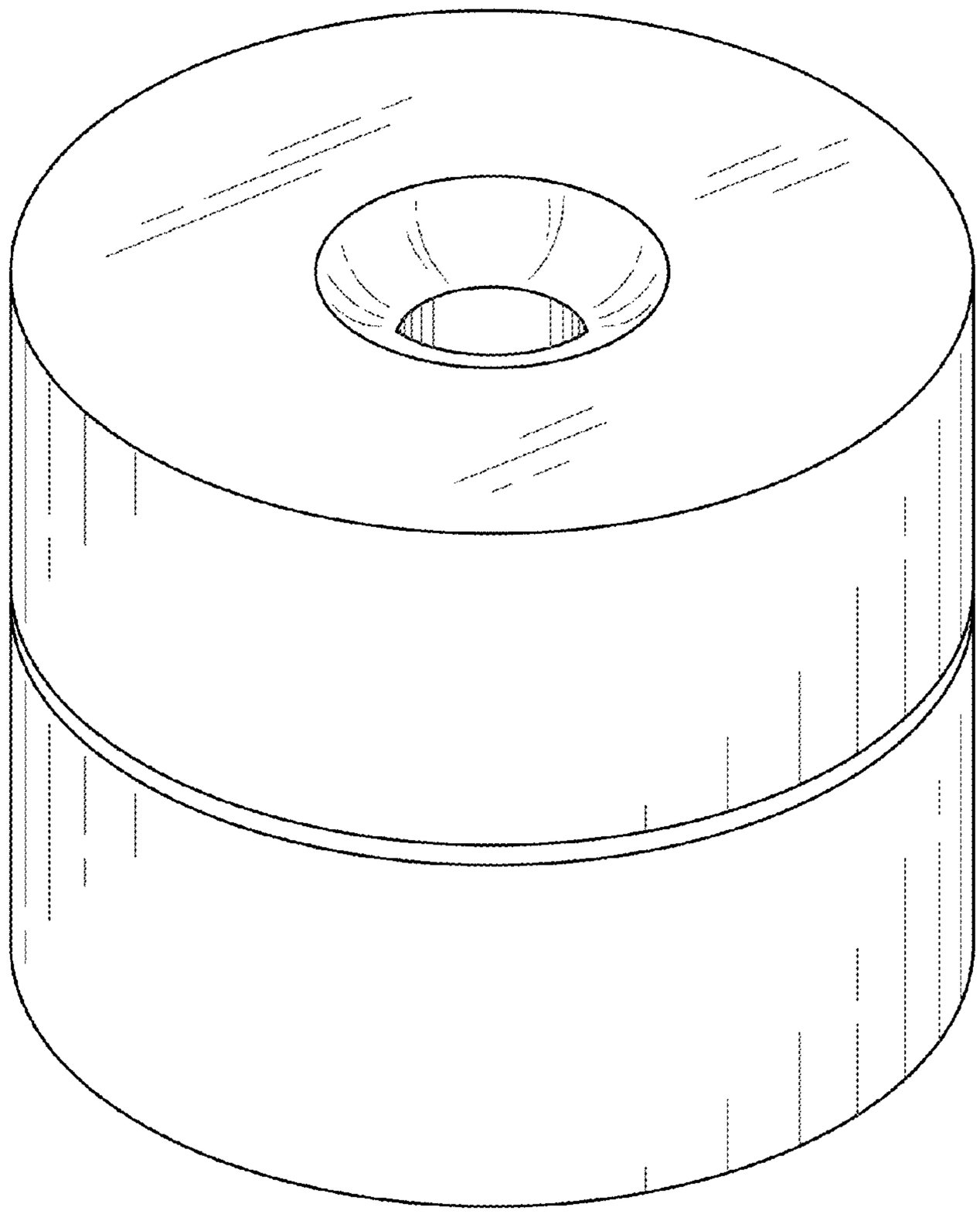

FIG.1

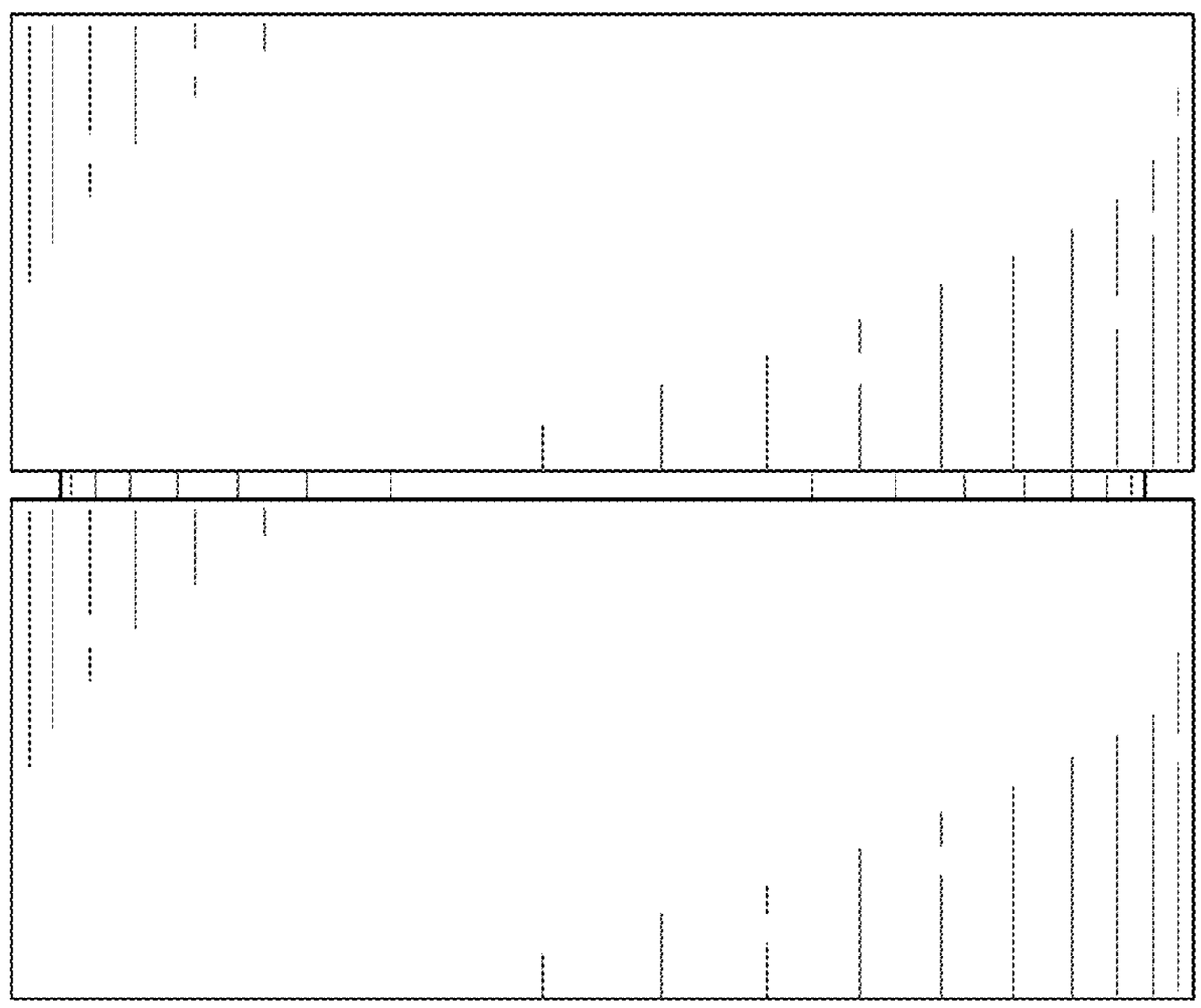

FIG.2

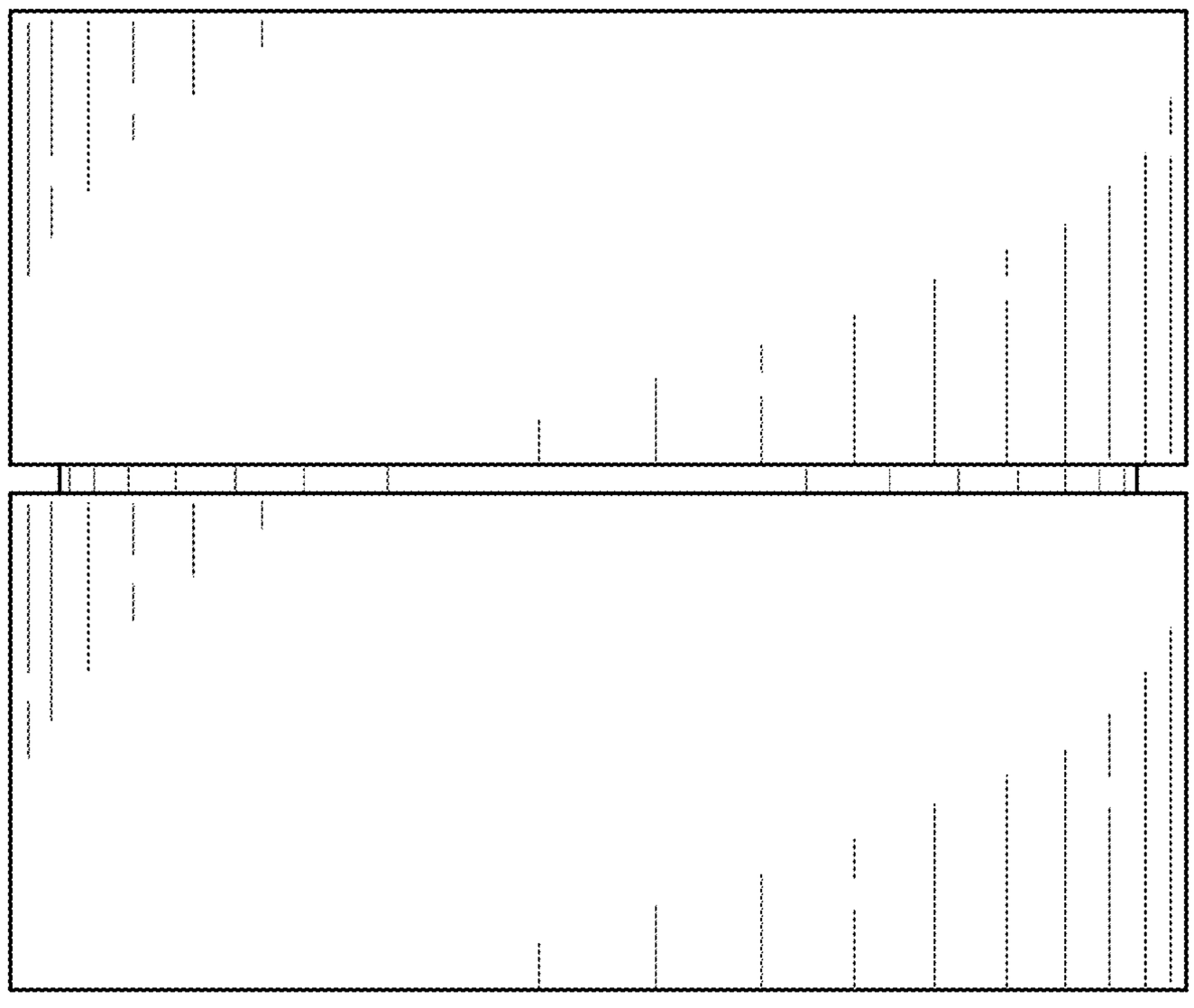

FIG.3

FIG.4

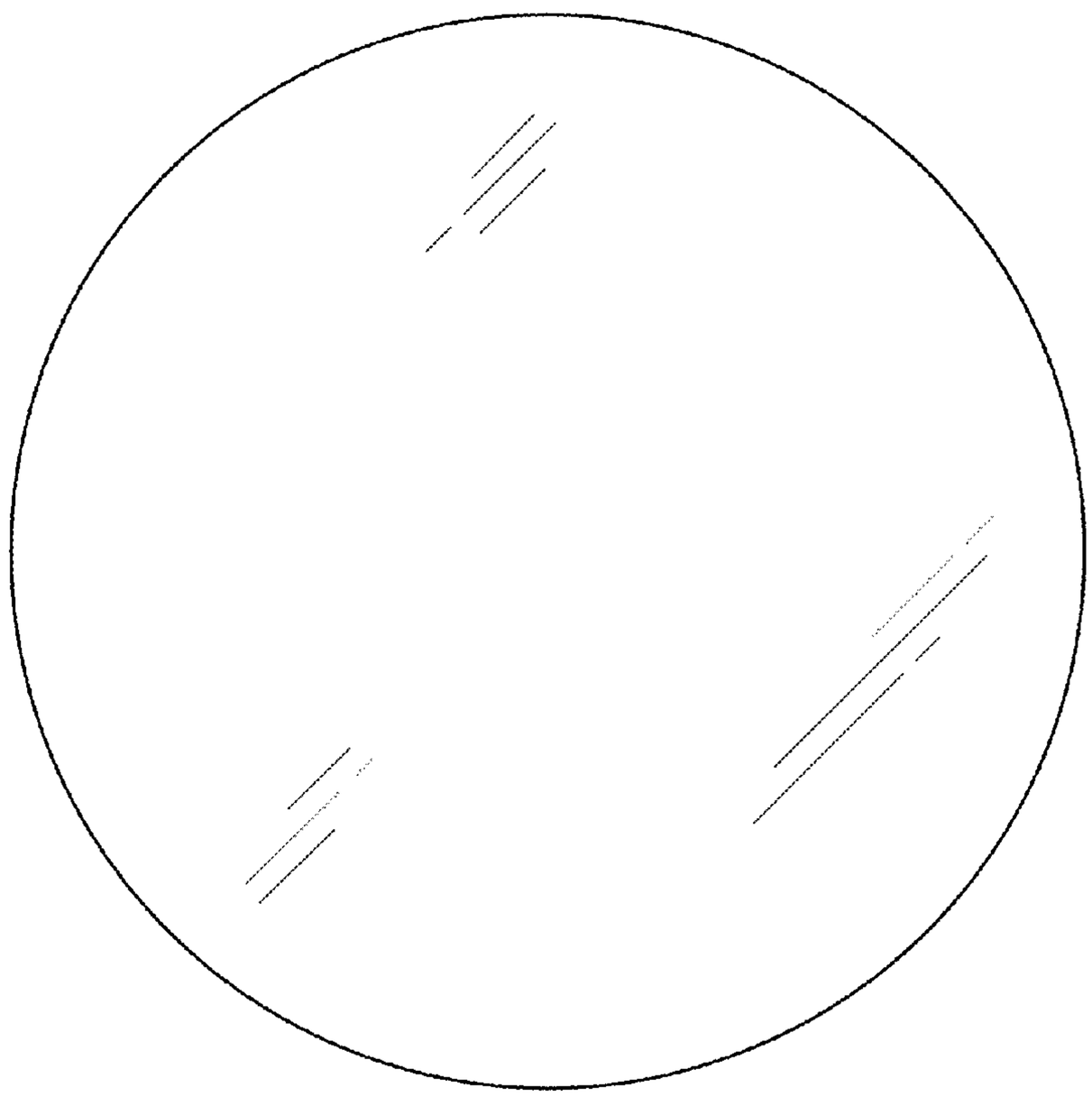

FIG.5