US00D681393S

(12) United States Design Patent

Agarwal et al.

(10) Patent No.: US D681,393 S
(45) Date of Patent: ** May 7, 2013

(54) **ADJUSTABLE VENTURI AERATOR**

(75) Inventors: **Dhruv Agarwal**, Seattle, WA (US); **Erin Malaspino**, Seattle, WA (US)

(73) Assignee: **True Fabrications, Inc.**, Seattle, WA (US)

(**) Term: **14 Years**

(21) Appl. No.: **29/409,126**

(22) Filed: **Dec. 20, 2011**

(51) **LOC (9) Cl.** **07-99**

(52) **U.S. Cl.**
USPC **D7/398**; D7/700; D7/397; D7/213

(58) **Field of Classification Search** D7/398, D7/397, 387, 213, 700, 400, 667; D9/440; 261/DIG. 75, 76; 222/190, 189.07, 113
See application file for complete search history.

(56) **References Cited**

U.S. PATENT DOCUMENTS

D334,120 S * 3/1993 Faught D7/700
5,293,912 A * 3/1994 Wildash et al. 141/344
5,713,263 A * 2/1998 Burks, III 99/323.1
D447,602 S * 9/2001 Dumler et al. D28/76
D499,616 S * 12/2004 Sanders et al. D7/700
7,299,743 B2 * 11/2007 Moore 99/323.1
D605,465 S * 12/2009 Benton et al. D7/396.2
D624,358 S * 9/2010 Maufette et al. D7/398
7,841,584 B2 * 11/2010 Sabadicci et al. 261/76
D633,753 S * 3/2011 White D7/398
D653,753 S * 2/2012 Ecabert et al. D24/118

* cited by examiner

Primary Examiner — Marianne Pandozzi
(74) *Attorney, Agent, or Firm* — Lowe Graham Jones PLLC

(57) **CLAIM**

We claim the ornamental design for the adjustable venturi aerator, as shown and described.

DESCRIPTION

FIG. **1** is a front perspective view of the adjustable venturi aerator, showing our new design;
FIG. **2** is a left side view thereof;
FIG. **3** is a right side view thereof;
FIG. **4** is a top plan view thereof;
FIG. **5** is a bottom plan view thereof;
FIG. **6** is a rear view thereof; and,
FIG. **7** is a front view thereof.

1 Claim, 3 Drawing Sheets

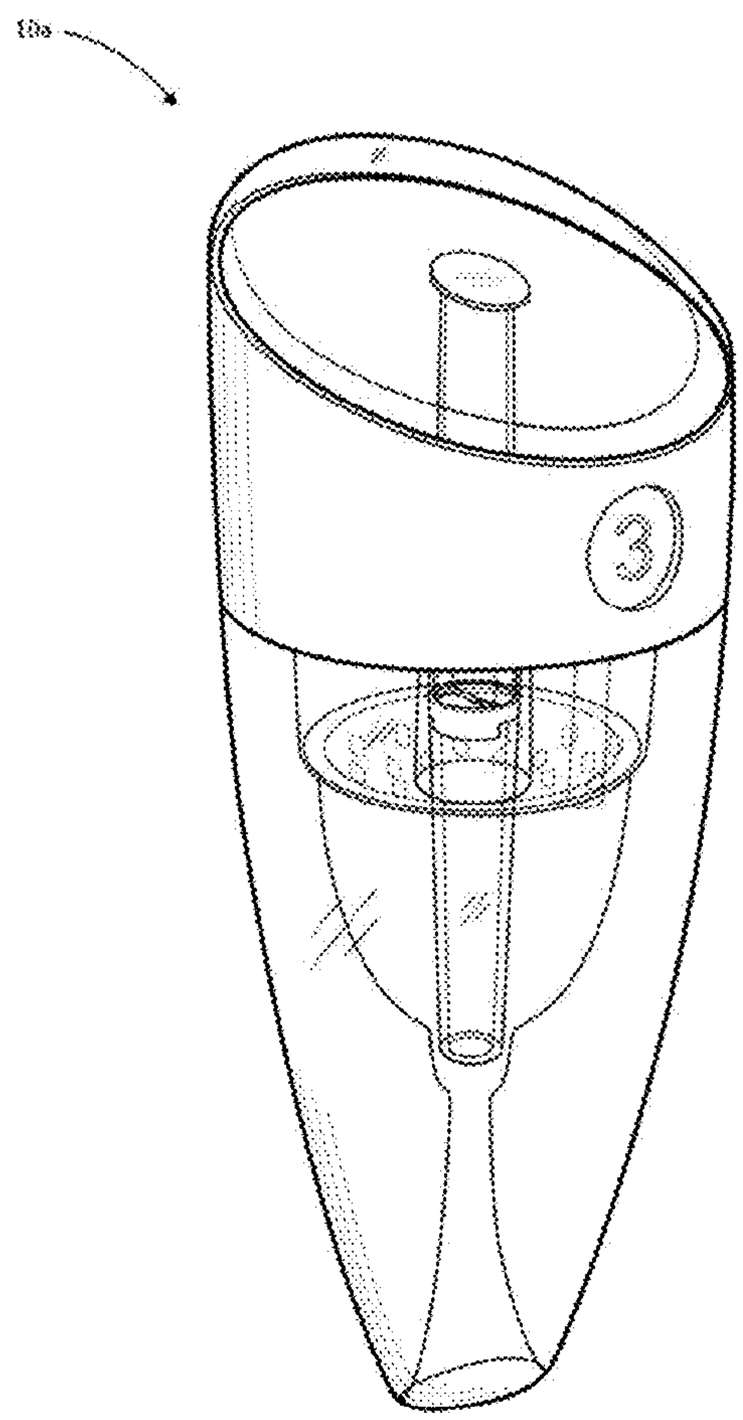

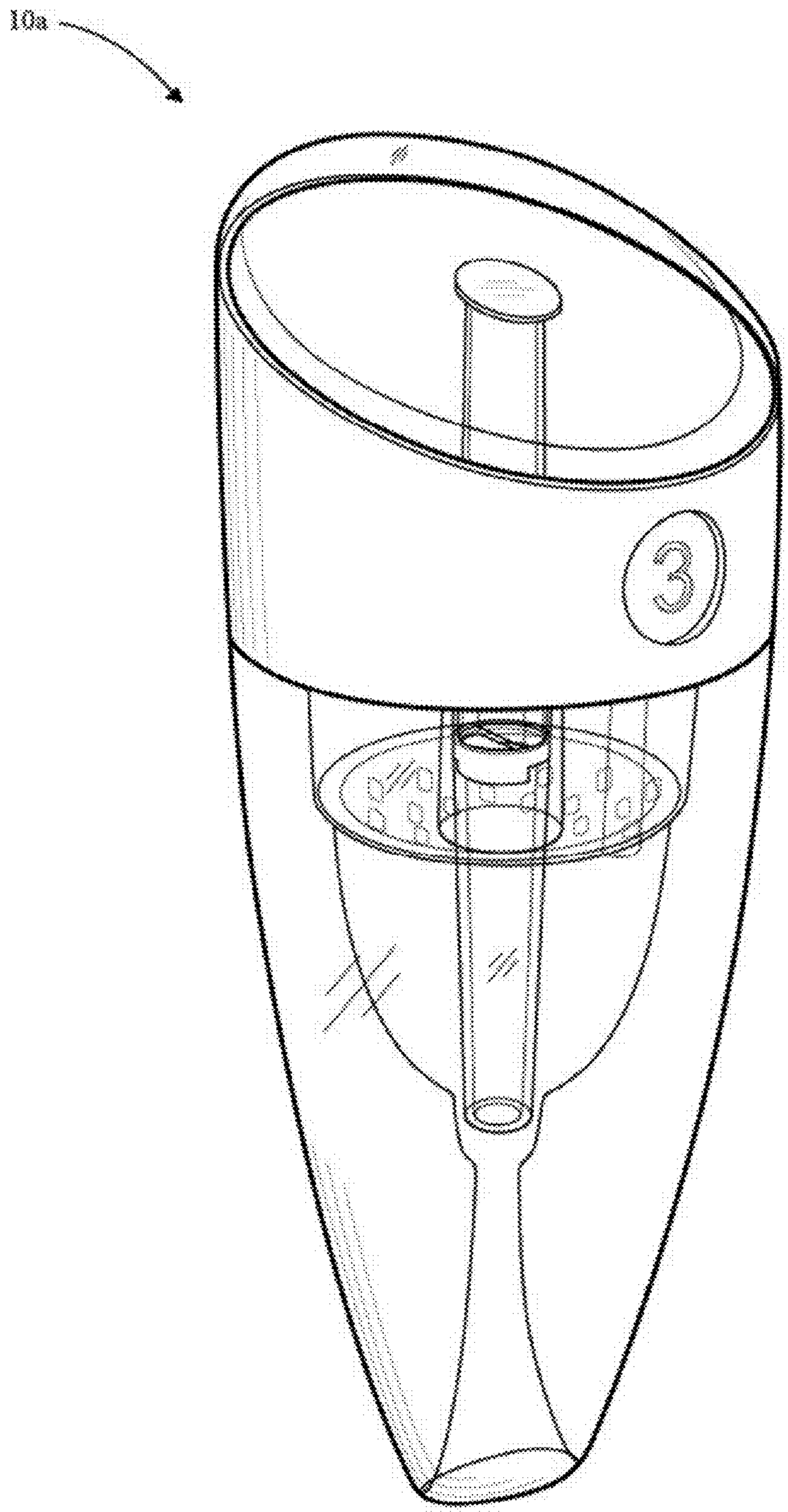

Fig. 1

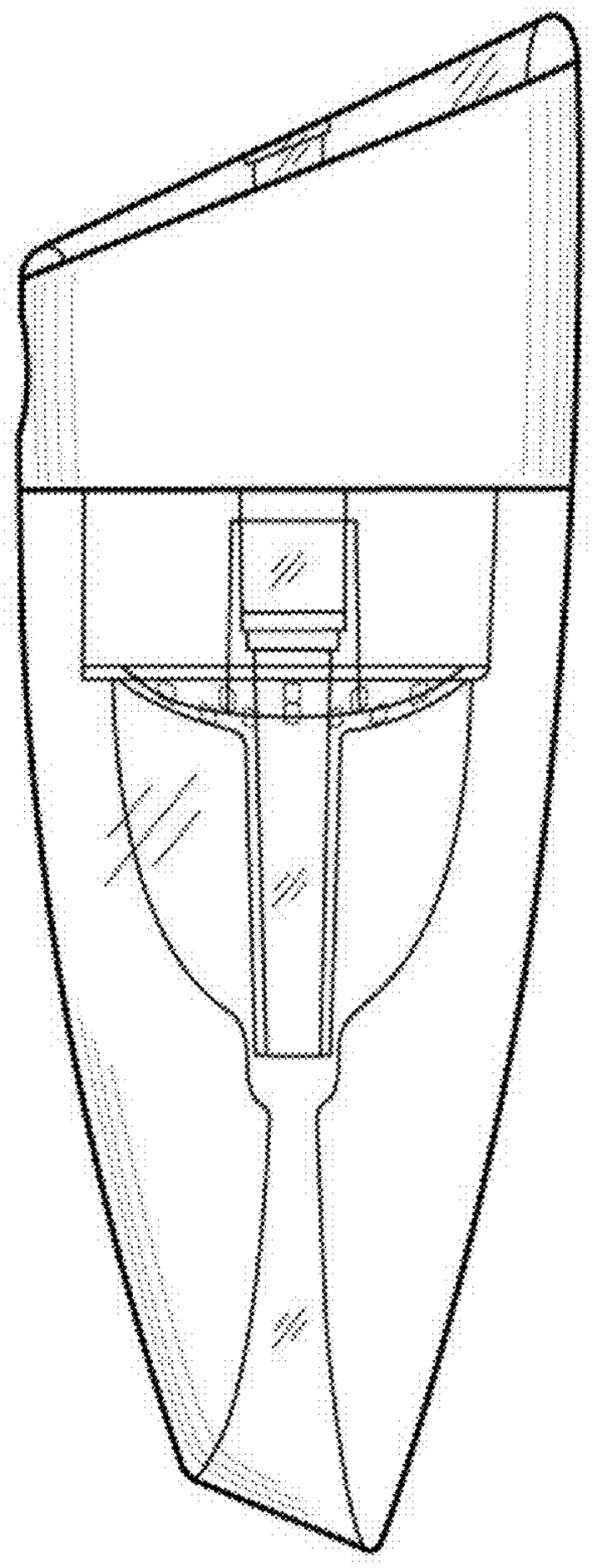

Fig. 2

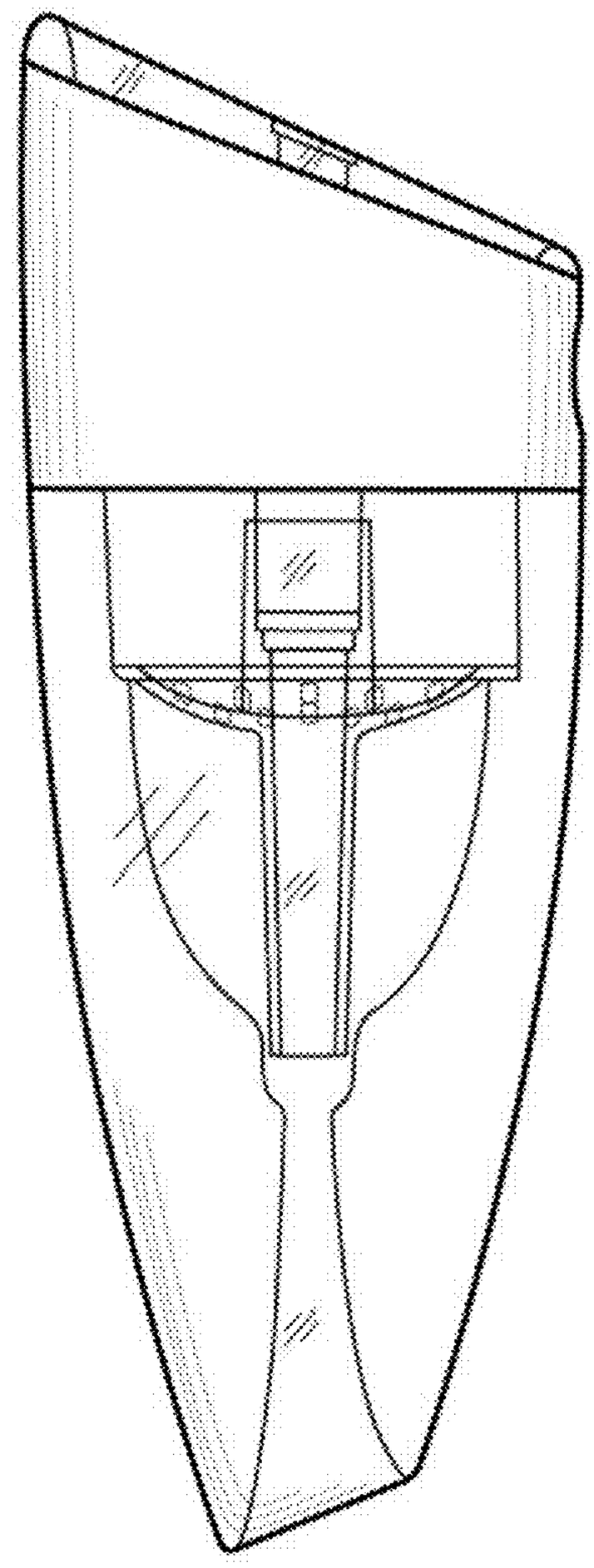

Fig. 3

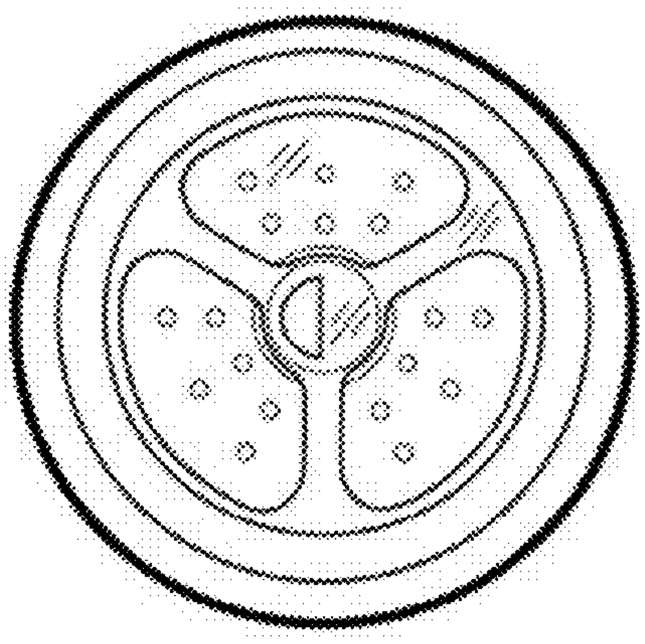

Fig. 4

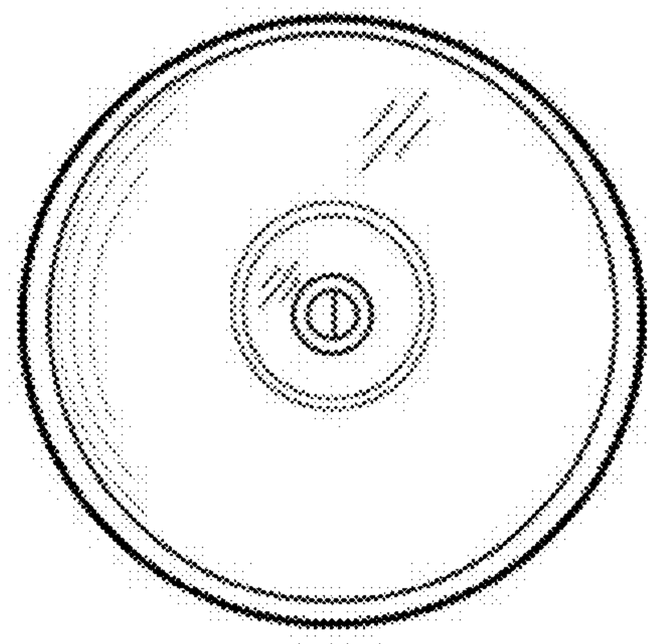

Fig. 5

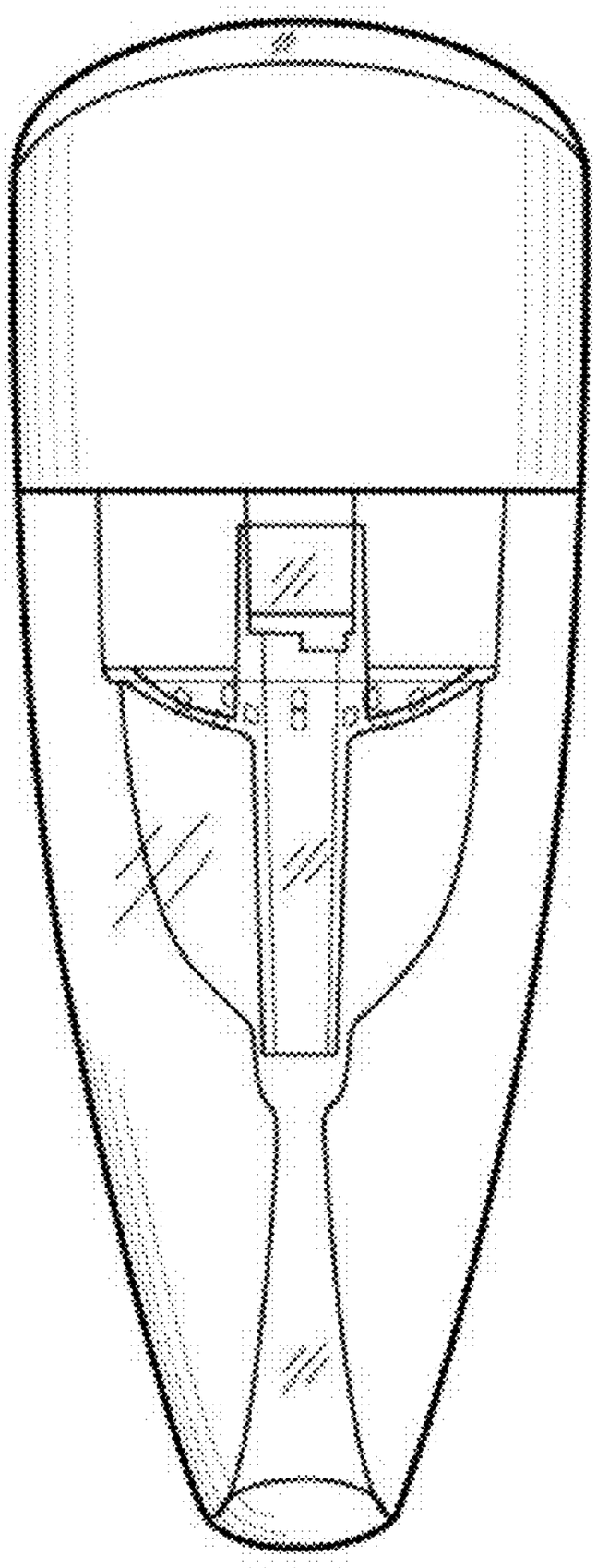

Fig. 6

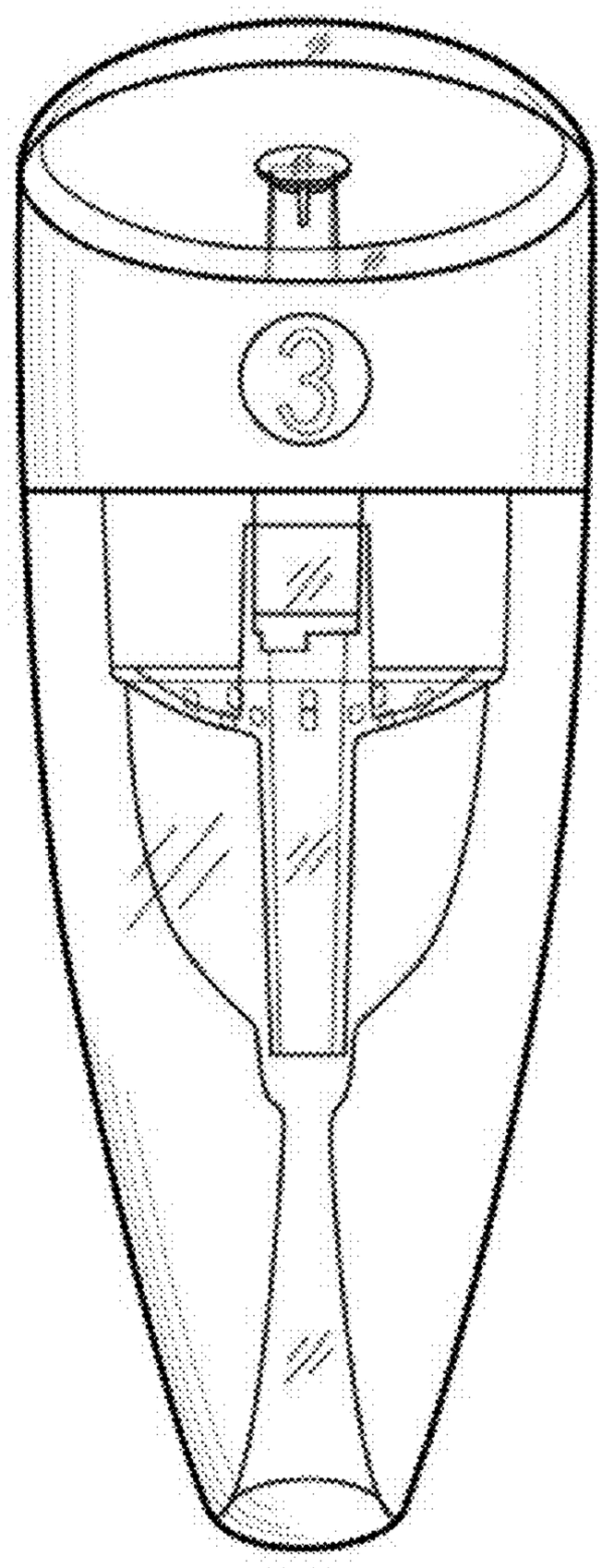

Fig. 7