US00D681244S

(12) United States Design Patent
Tsai

(10) Patent No.: US D681,244 S
(45) Date of Patent: ** Apr. 30, 2013

(54) **VEHICLE LIGHT**

(75) Inventor: **Ming-Hsien Tsai**, Tainan (TW)

(73) Assignee: **Jun Yan Auto Industrial Co., Ltd.**, Tainan (TW)

(**) Term: **14 Years**

(21) Appl. No.: **29/409,492**

(22) Filed: **Dec. 23, 2011**

(51) **LOC (9) Cl.** **26-06**

(52) **U.S. Cl.**
USPC **D26/28**

(58) **Field of Classification Search** D26/28–36; 362/459–468, 475–478, 485–487
See application file for complete search history.

(56) **References Cited**

U.S. PATENT DOCUMENTS

D538,956 S * 3/2007 Ishii D26/28
D542,442 S * 5/2007 Matsunami D26/28
D544,614 S * 6/2007 Markefka D26/28
D549,855 S * 8/2007 Moisy et al. D26/28
D556,349 S * 11/2007 Golden et al. D26/28
D561,358 S * 2/2008 Tachibana D26/28
D635,694 S * 4/2011 Yang et al. D26/28

* cited by examiner

Primary Examiner — Marcus Jackson
(74) *Attorney, Agent, or Firm* — Rosenberg, Klein & Lee

(57) **CLAIM**

The ornamental design for a vehicle light, as shown and described.

DESCRIPTION

FIG. **1** is a perspective view of a vehicle light showing my new design;
FIG. **2** is a front elevational view thereof;
FIG. **3** is a rear elevational view thereof;
FIG. **4** is a left side elevational view thereof;
FIG. **5** is a right side elevational view thereof;
FIG. **6** is a top plan view thereof; and,
FIG. **7** is a bottom plan view thereof.

1 Claim, 7 Drawing Sheets

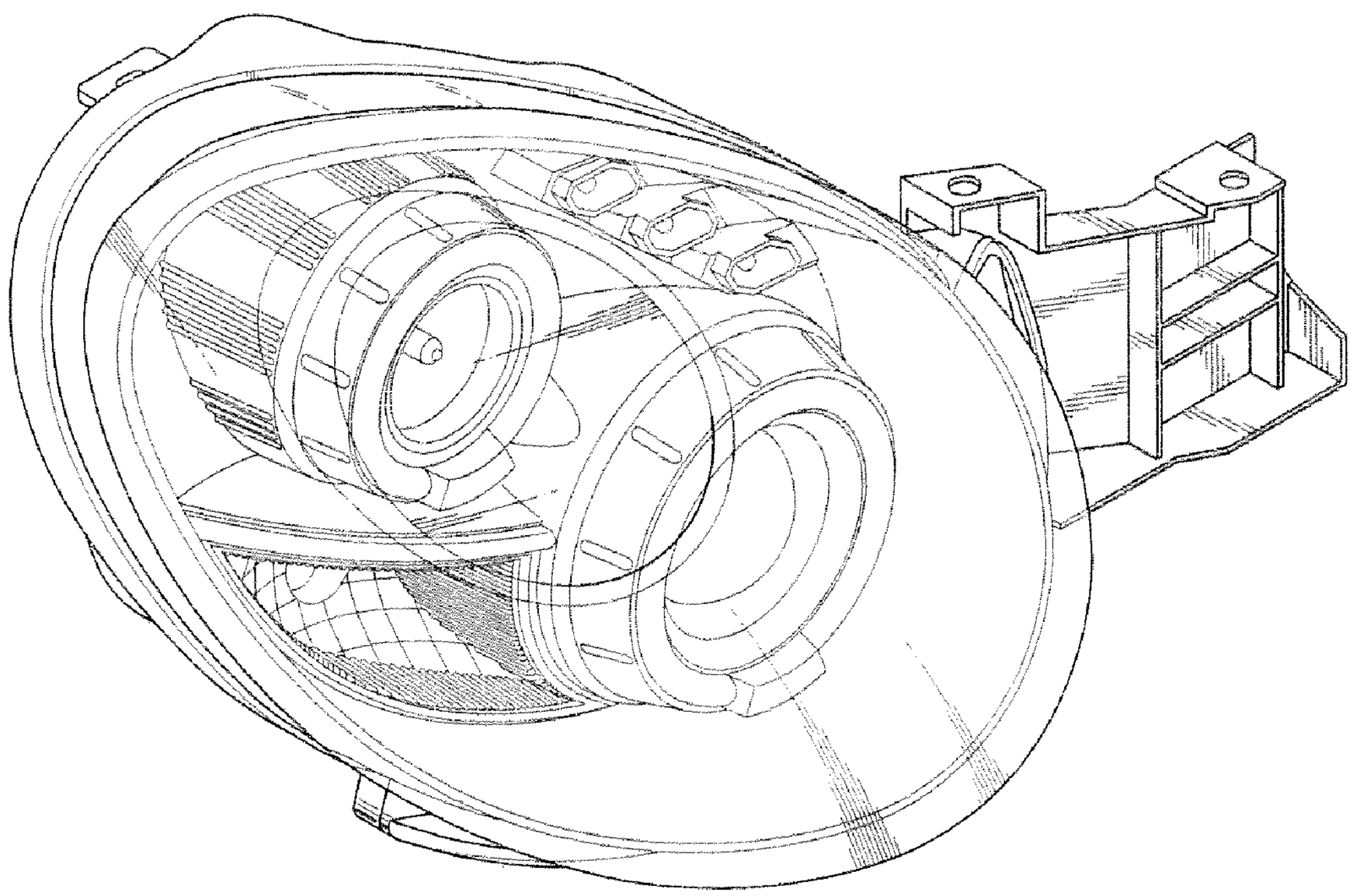

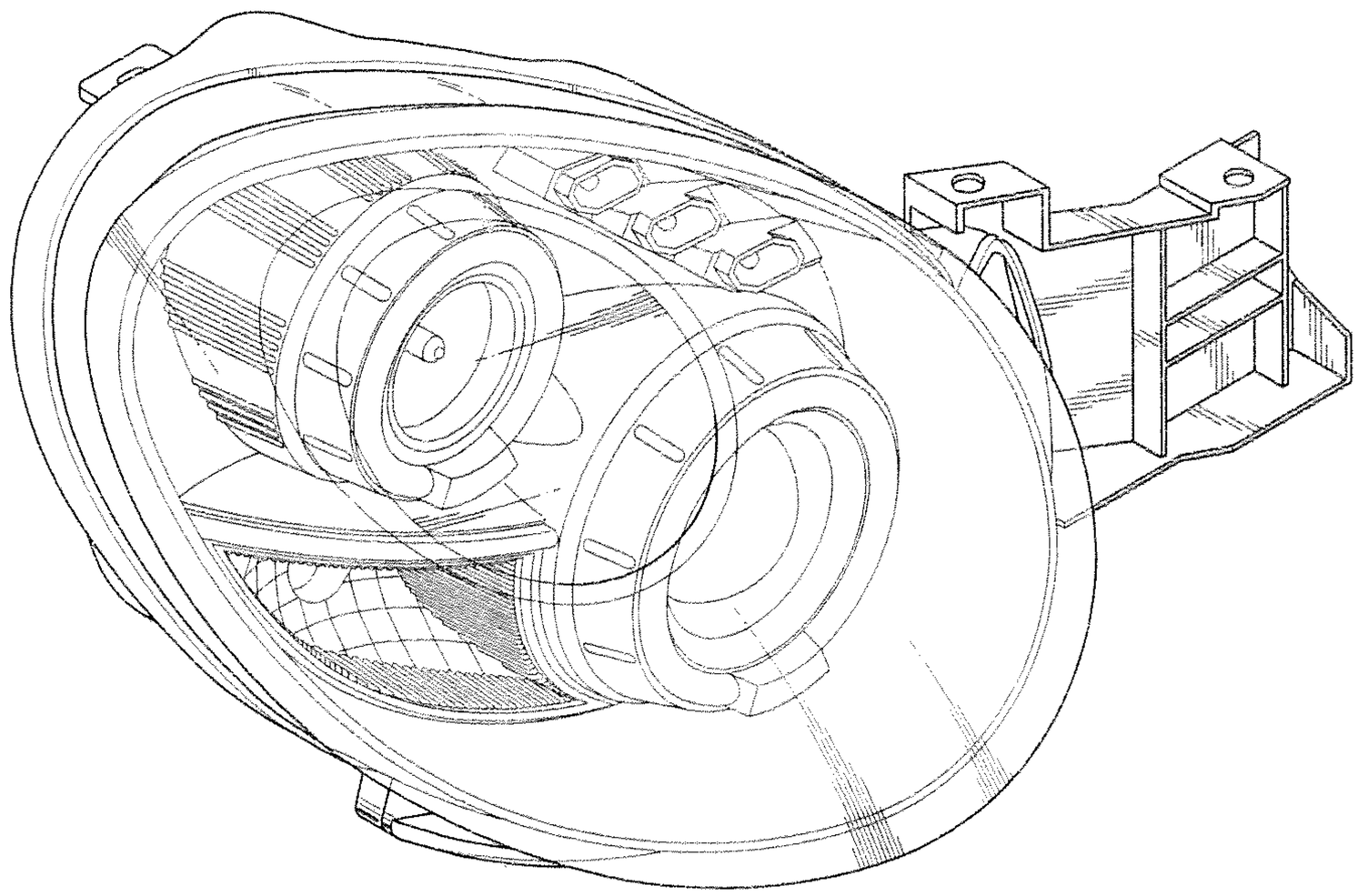

FIG. 1

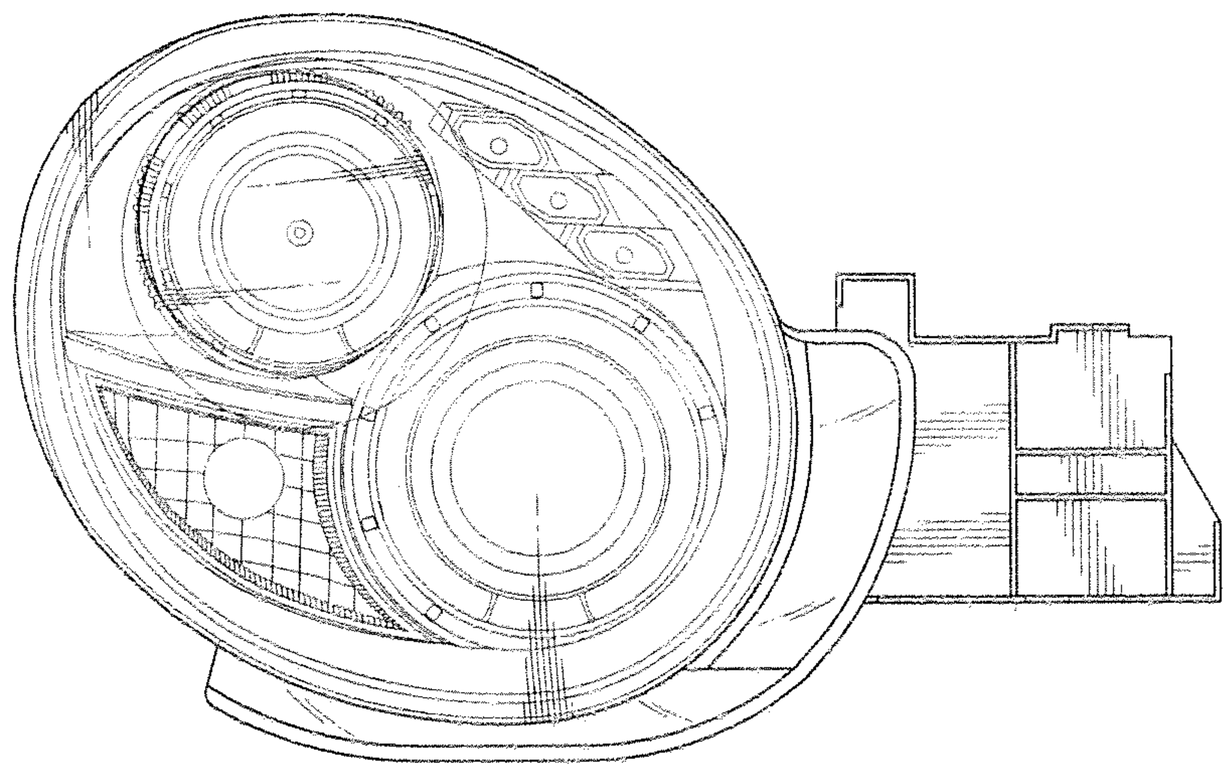

FIG. 2

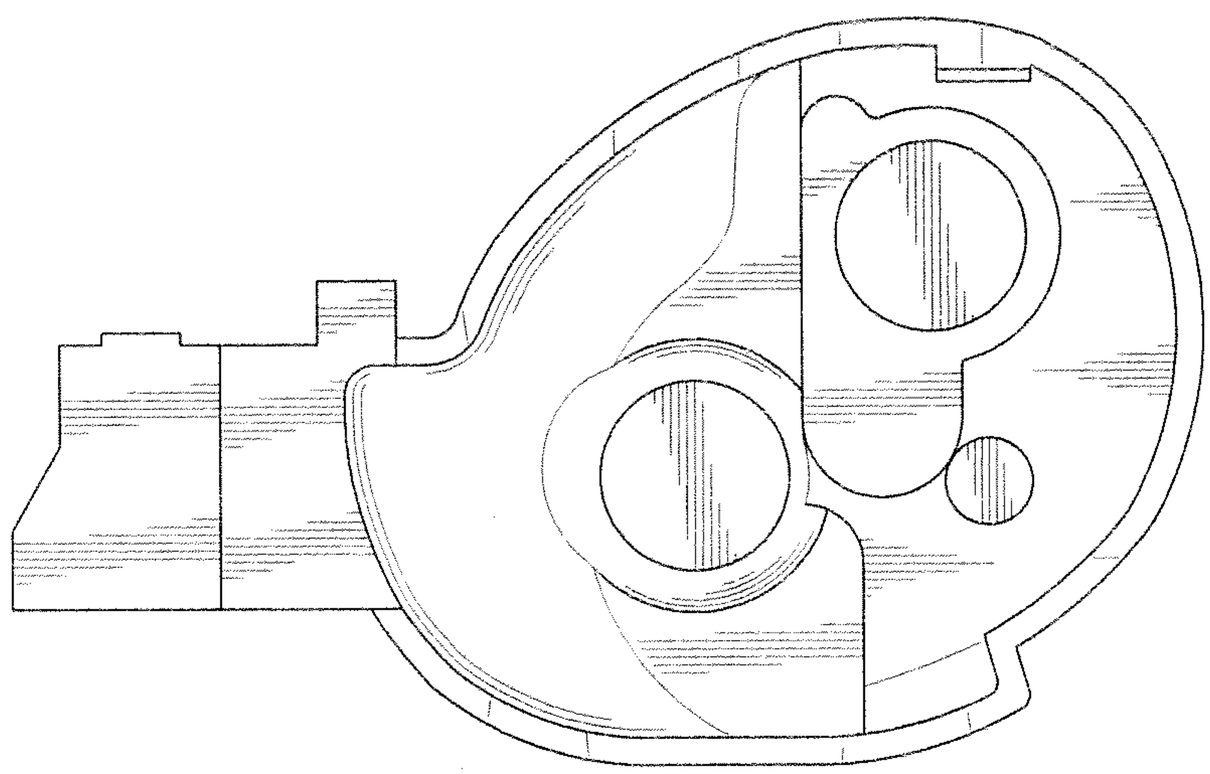

FIG. 3

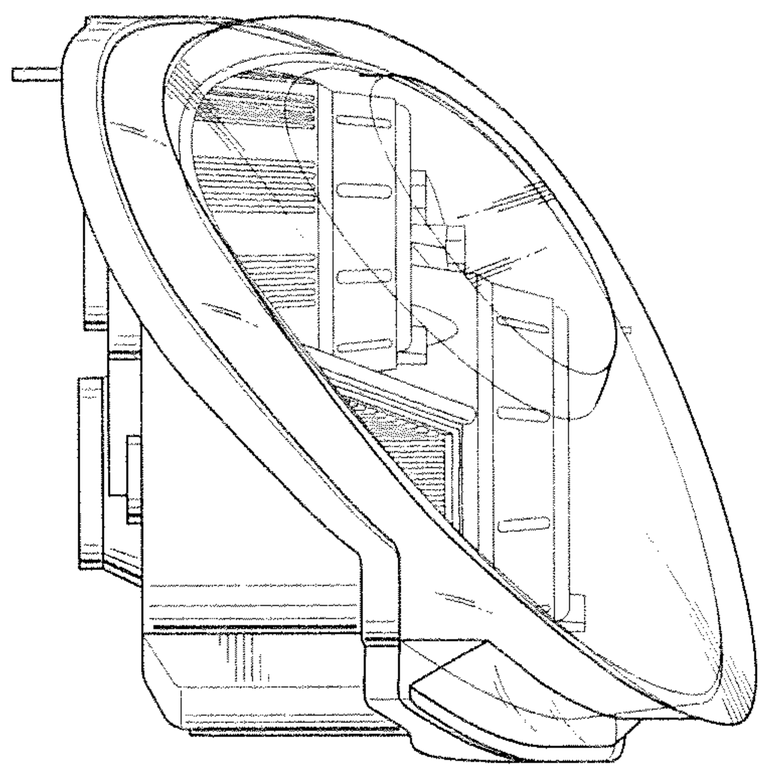

FIG. 4

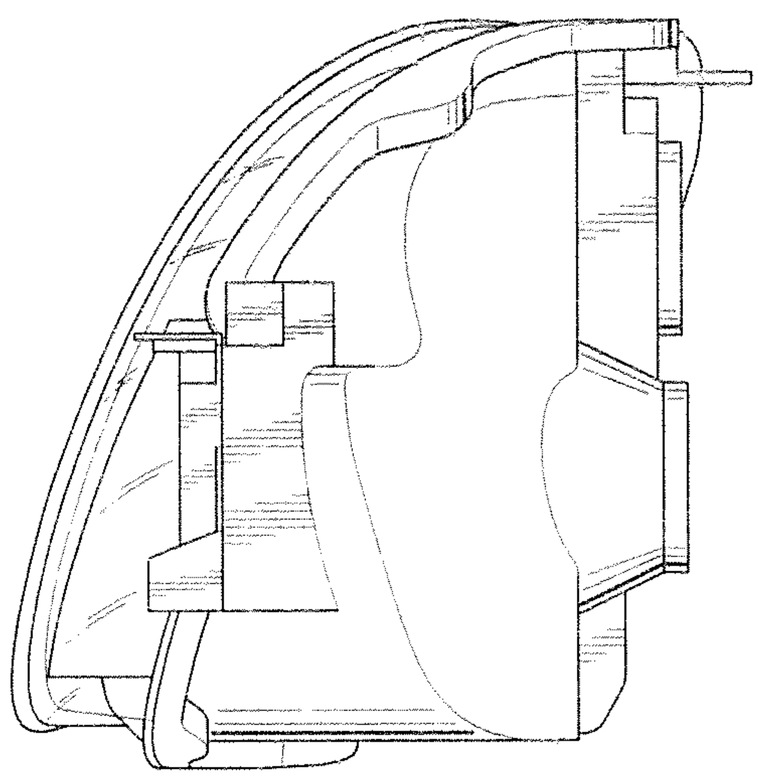

FIG. 5

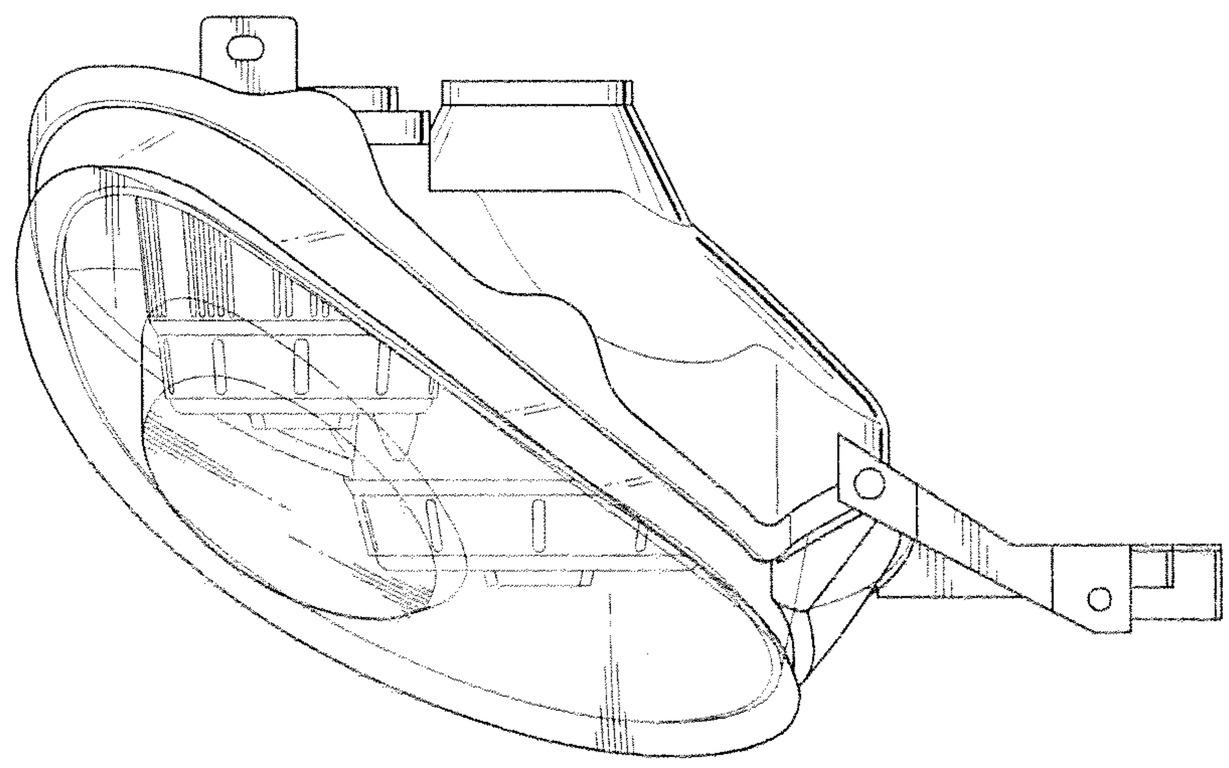

FIG. 6

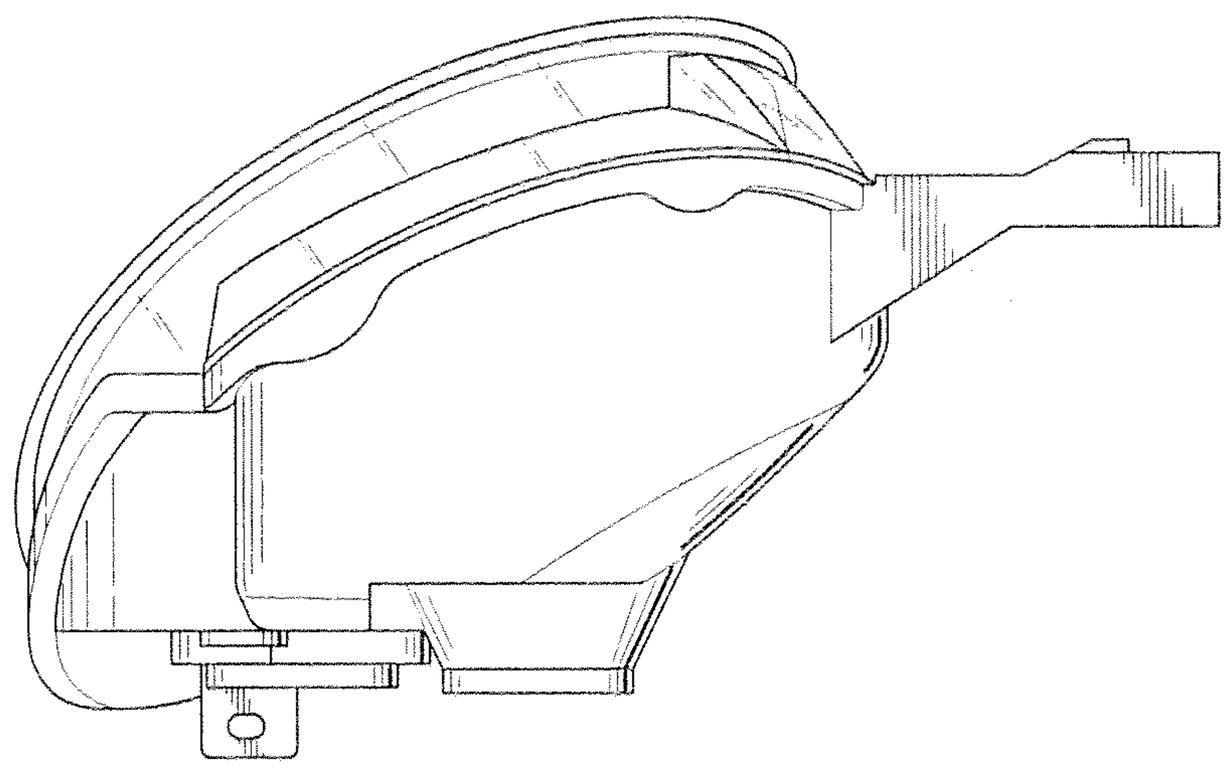

FIG. 7