US00D681058S

(12) United States Design Patent

Yamamoto et al.

(10) Patent No.: US D681,058 S
(45) Date of Patent: ** Apr. 30, 2013

(54) **MOTOR STATOR**

(75) Inventors: **Masami Yamamoto**, Chiba (JP); **Kenichi Kudo**, Chiba (JP)

(73) Assignee: **SEIKO Precision Inc.** (JP)

(**) Term: **14 Years**

(21) Appl. No.: **29/424,565**

(22) Filed: **Jun. 13, 2012**

(30) **Foreign Application Priority Data**

Dec. 15, 2011 (JP) 2011-029173

(51) **LOC (9) Cl.** **15-01**

(52) **U.S. Cl.**
USPC **D15/5**; D13/118

(58) **Field of Classification Search** D15/1–5; D13/118, 114, 122, 199; 310/267, 268; 336/192, 336/198, 200, 208
See application file for complete search history.

(56) **References Cited**

U.S. PATENT DOCUMENTS

D530,344 S * 10/2006 Maita et al. D15/5
D599,824 S * 9/2009 Chang D15/5
D650,333 S * 12/2011 Su D13/122
D653,618 S * 2/2012 Qin et al. D13/118
D655,722 S * 3/2012 Kim et al. D15/5
2003/0020356 A1* 1/2003 Horng et al. 310/216
2006/0055279 A1* 3/2006 Zhan 310/257

* cited by examiner

Primary Examiner — T. Chase Nelson
Assistant Examiner — Ania Aman
(74) *Attorney, Agent, or Firm* — SAIDMAN DesignLaw Group

(57) **CLAIM**

The ornamental design for a motor stator, as shown and described.

DESCRIPTION

FIG. **1** is a perspective view of a motor stator;
FIG. **2** is a perspective view thereof showing the opposite side;
FIG. **3** is a front view thereof;
FIG. **4** is a rear view thereof;
FIG. **5** is a left side view thereof;
FIG. **6** is a right side view thereof;
FIG. **7** is a top plan view thereof;
FIG. **8** is a bottom plan view thereof; and,
FIG. **9** is a sectional view taken at line **9-9** in FIG. **5**.
The broken lines showing on the drawing disclosure are for illustrative purposes only and form no part of the claimed design. The dot-dashed lines indicate the boundary between the claimed portion and unclaimed portion.

1 Claim, 5 Drawing Sheets

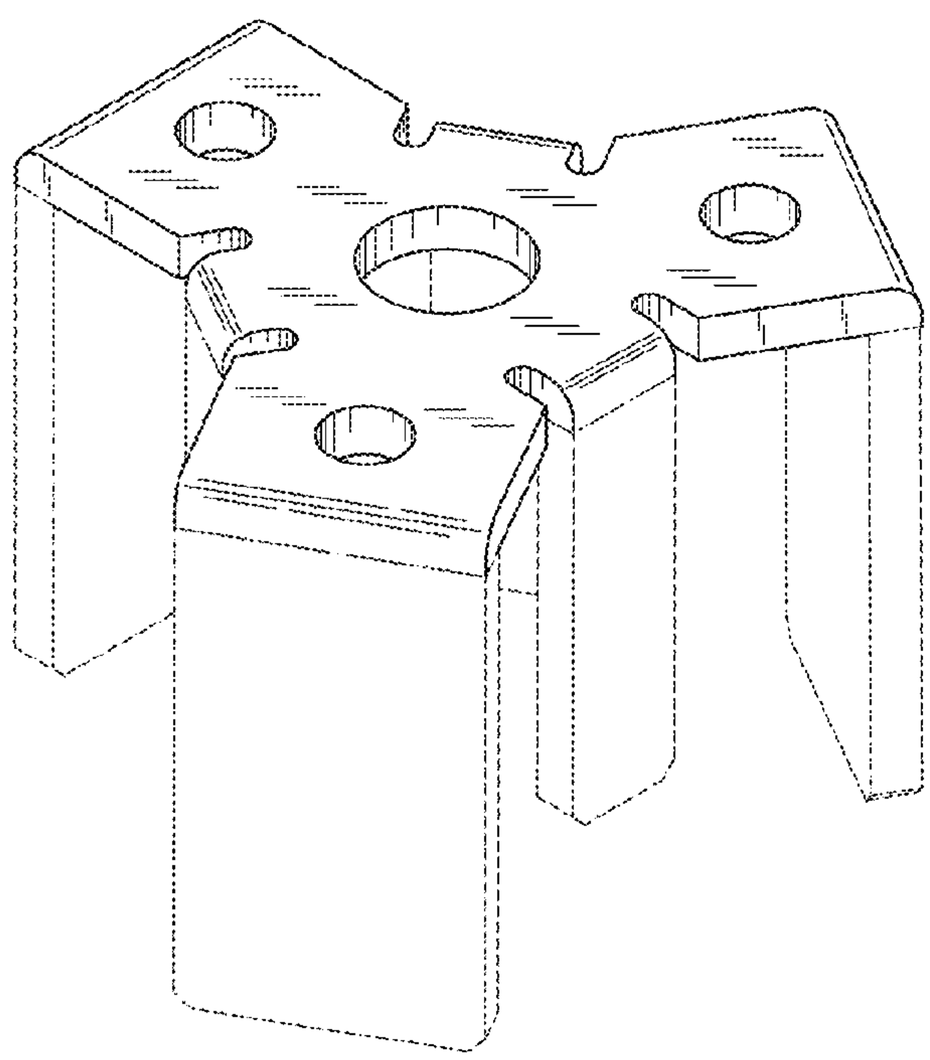

Fig.1

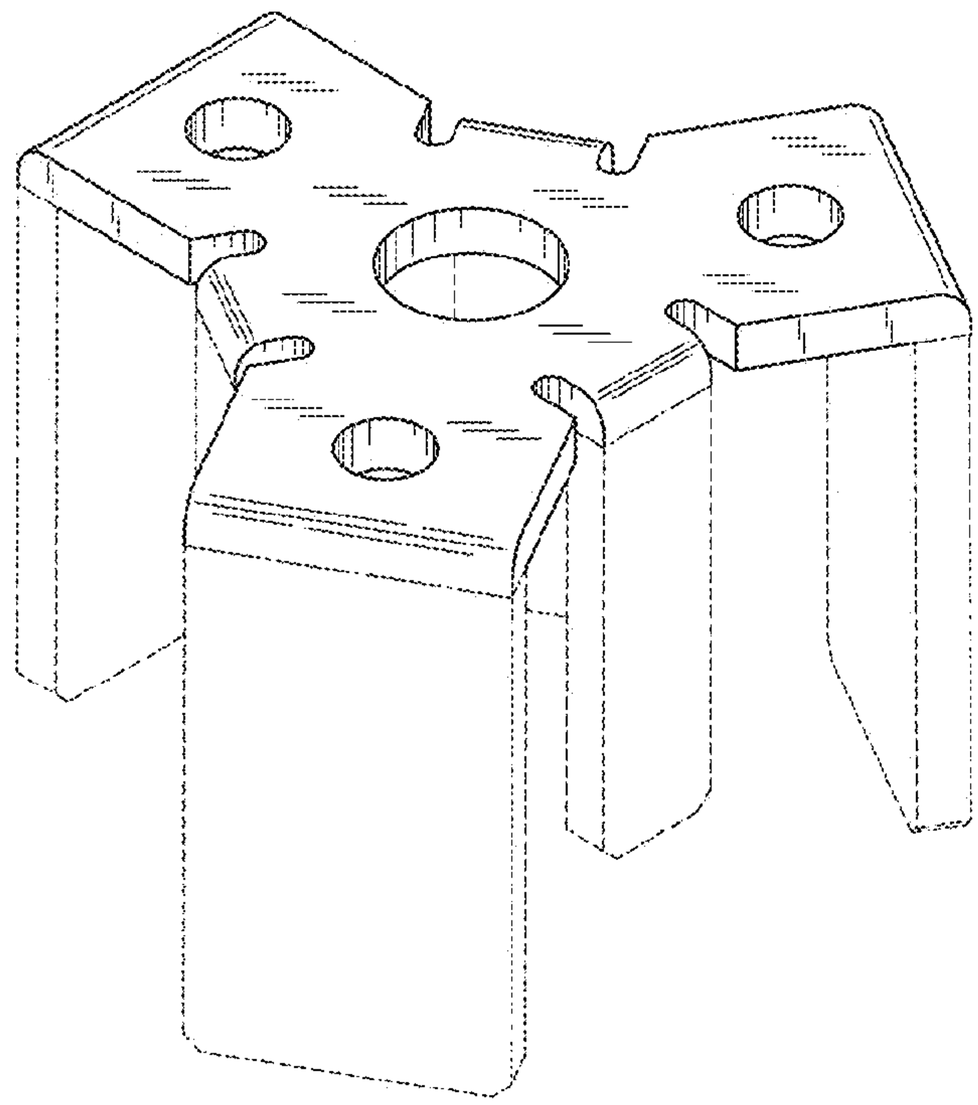

Fig.2

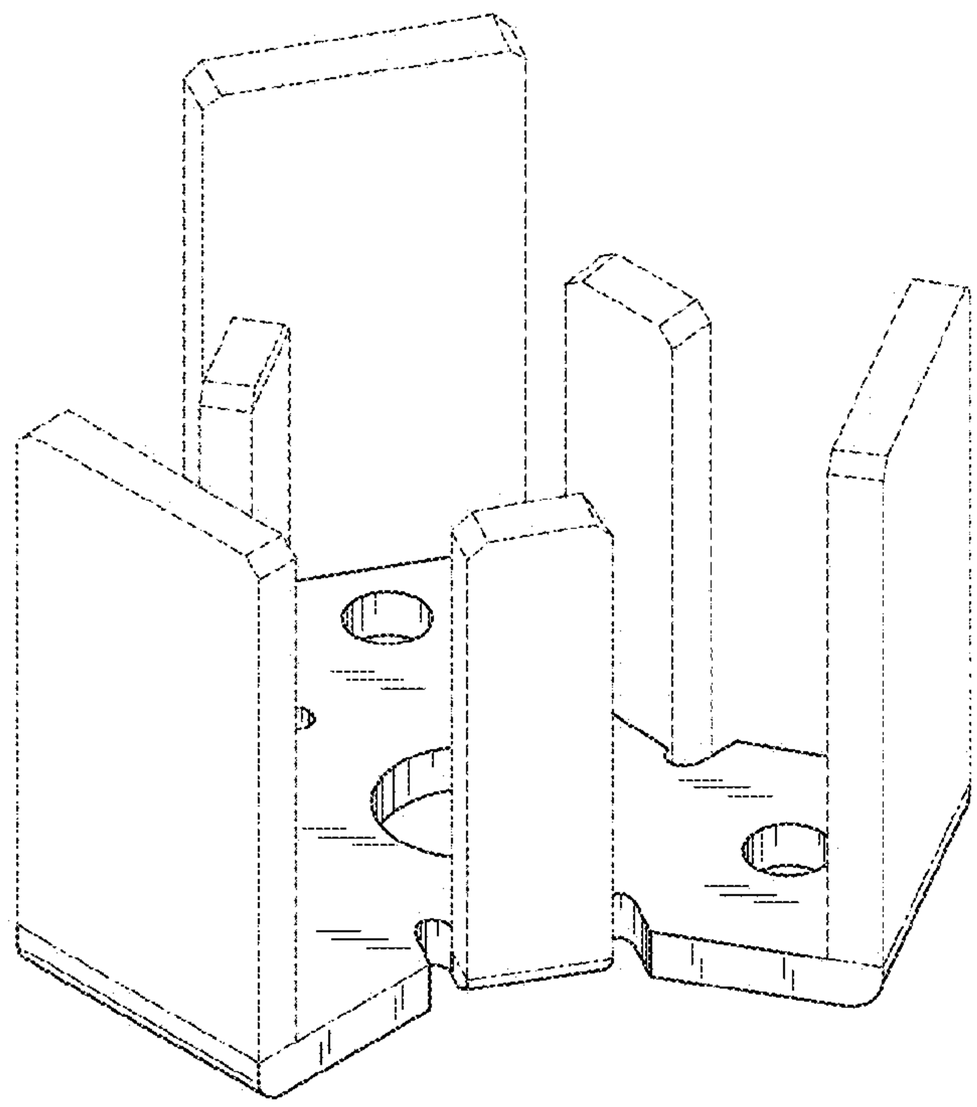

Fig.3

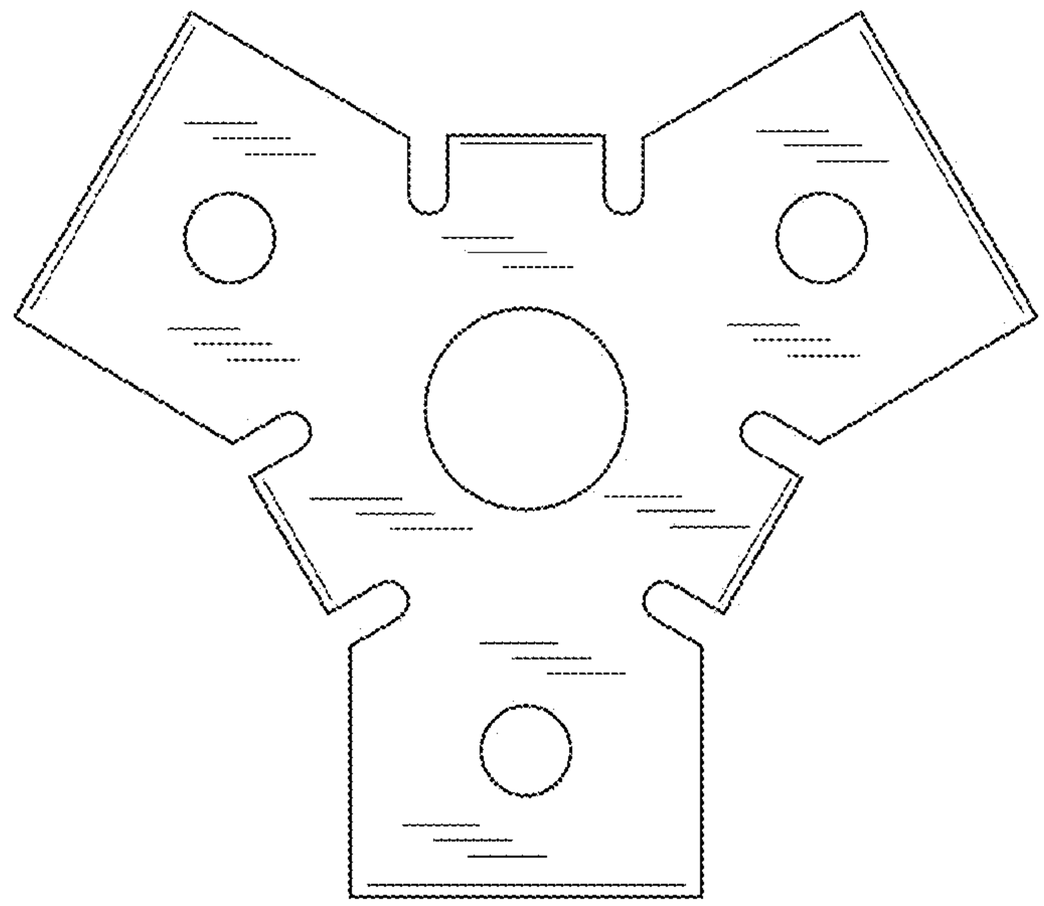

Fig.4

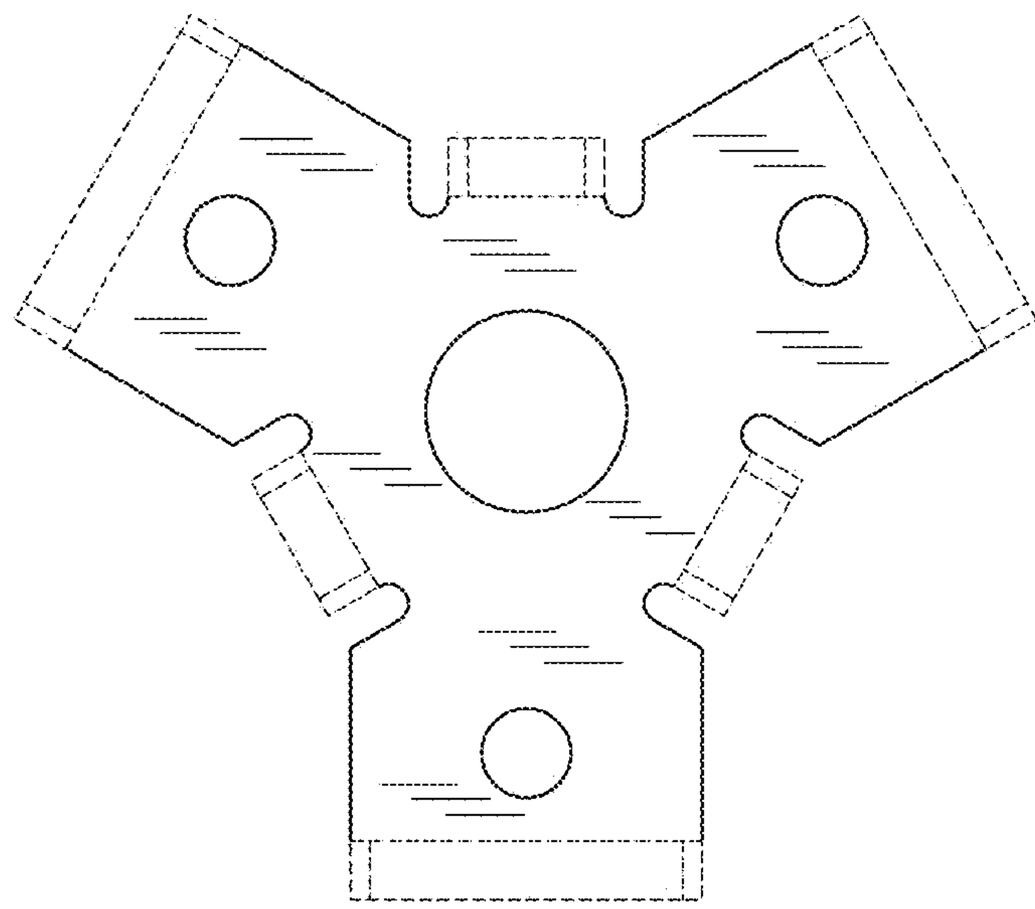

Fig.5

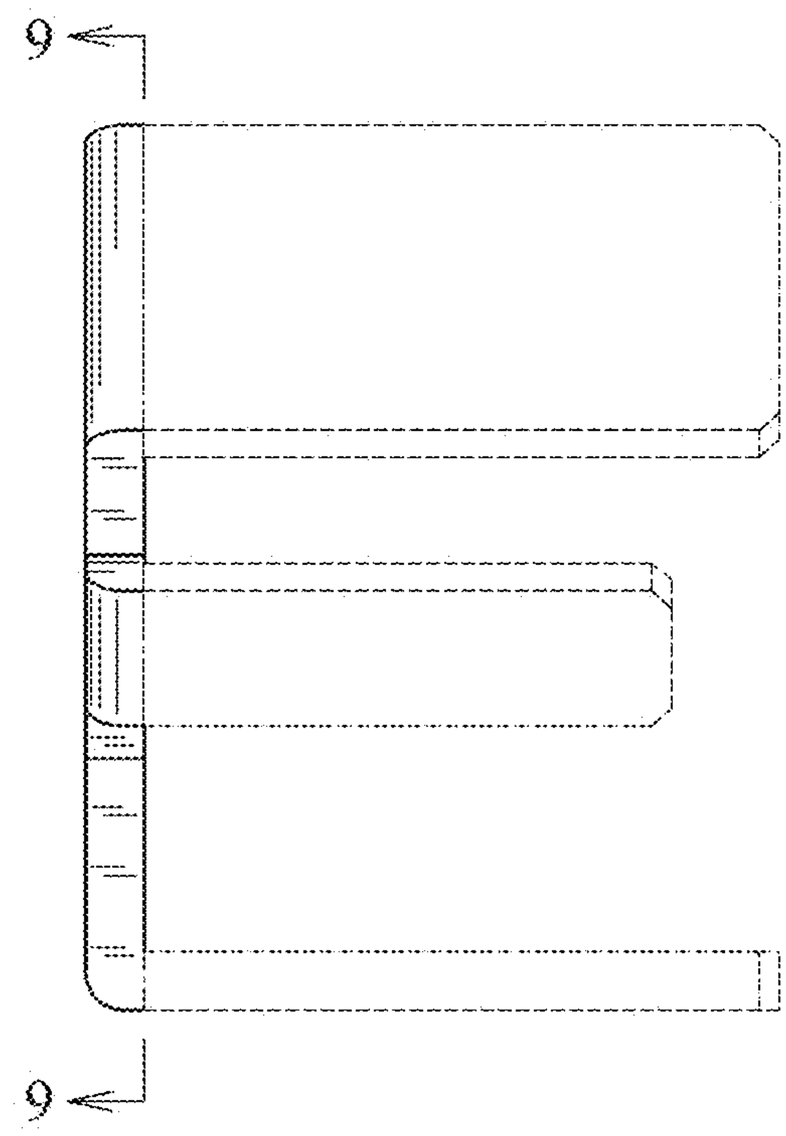

Fig.6

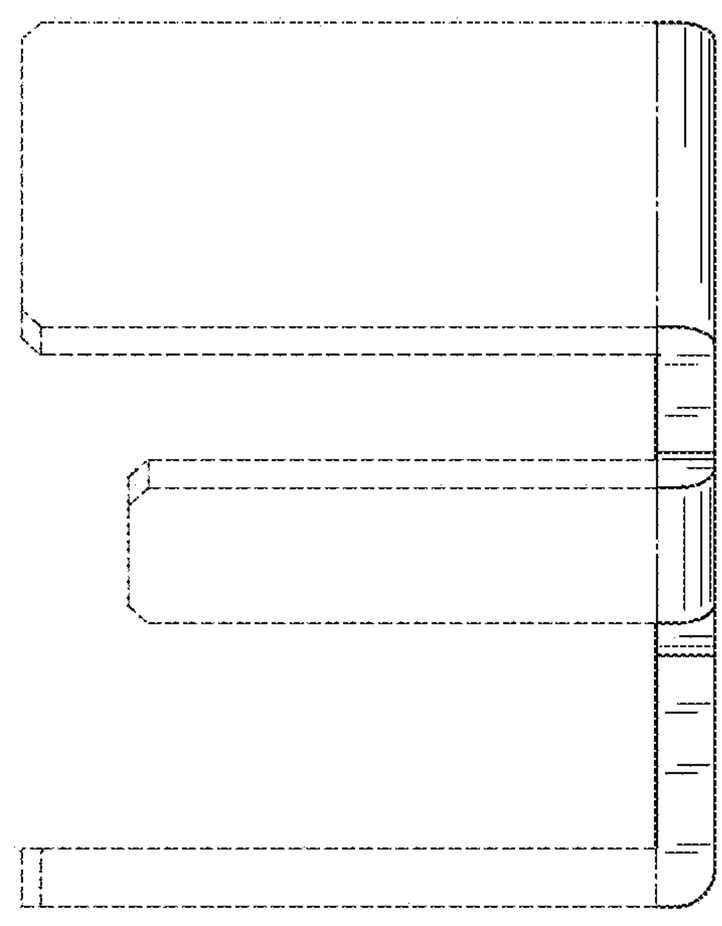

Fig.7

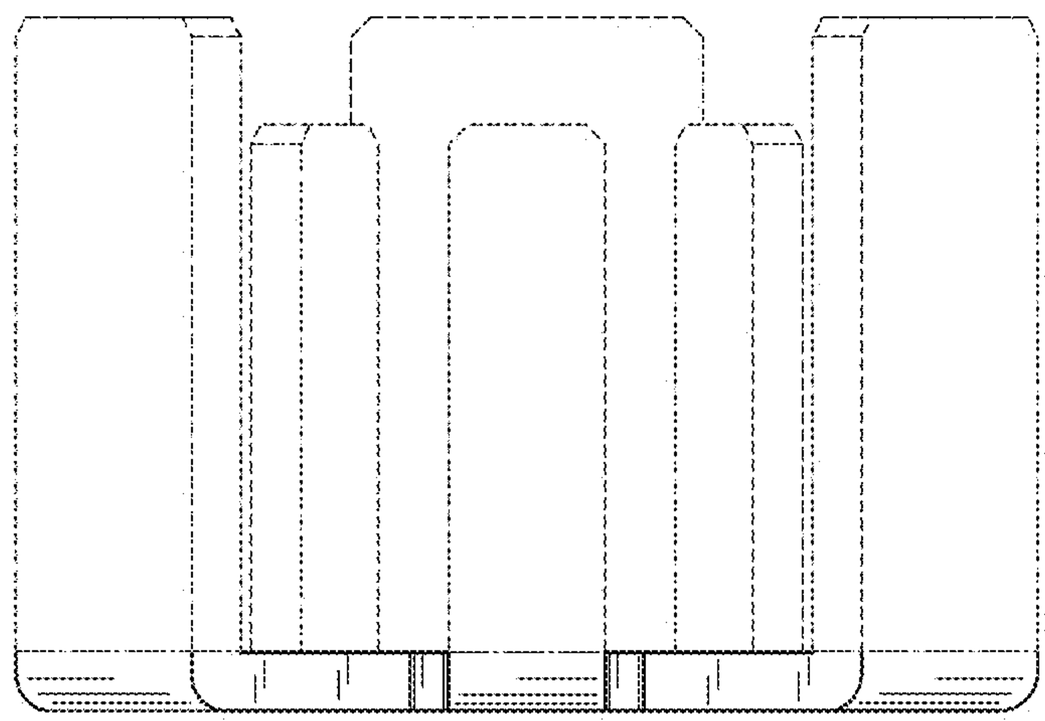

Fig.8

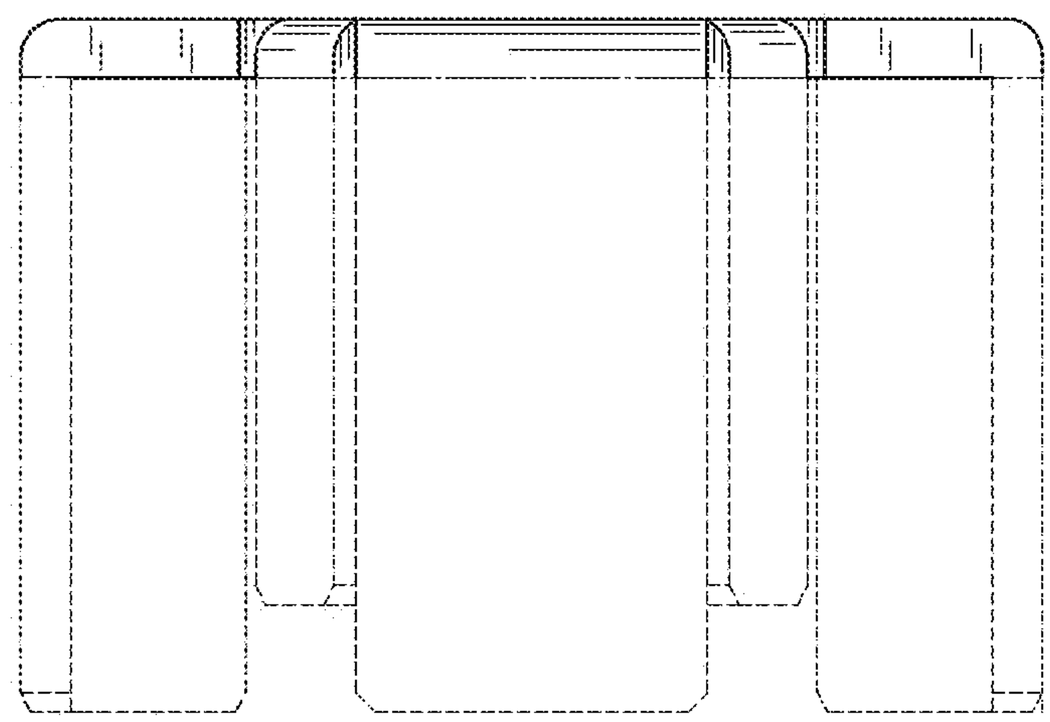
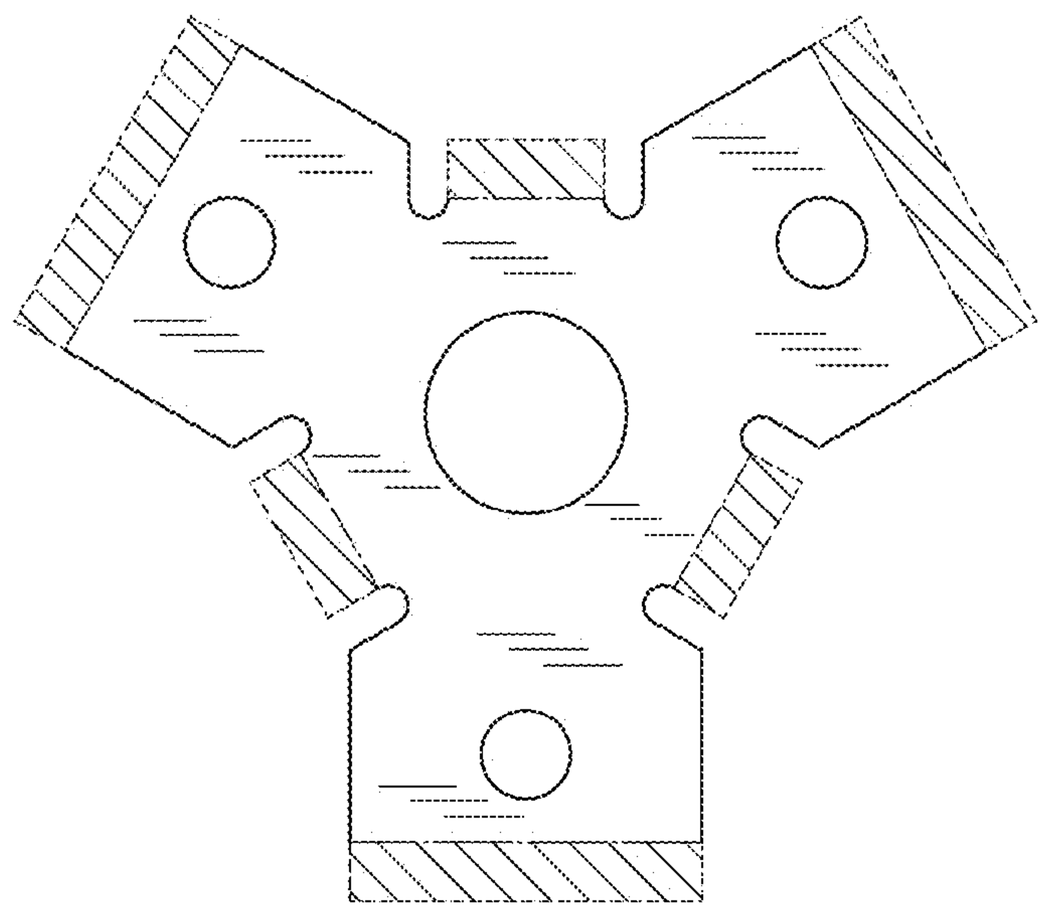
Fig.9