US00D681016S

(12) United States Design Patent
Ishinabe

(10) Patent No.: US D681,016 S
(45) Date of Patent: ** *Apr. 30, 2013

(54) **IN-VEHICLE SPEAKER PANEL**

(75) Inventor: **Hidetaka Ishinabe**, Saitama (JP)

(73) Assignee: **Clarion Co., Ltd.**, Saitama (JP)

(*) Notice: This patent is subject to a terminal disclaimer.

(**) Term: **14 Years**

(21) Appl. No.: **29/411,229**

(22) Filed: **Jan. 18, 2012**

(30) **Foreign Application Priority Data**

Jul. 27, 2011 (JP) 2011-017261

(51) **LOC (9) Cl.** **14-01**

(52) **U.S. Cl.**
USPC **D14/224**

(58) **Field of Classification Search** D14/204, D14/210, 215, 216, 217, 219, 221, 211, 224, D14/224.1; 381/332, 336, 395, 229; 360/99.02; 369/75.11; D12/114
See application file for complete search history.

(56) **References Cited**

U.S. PATENT DOCUMENTS

2,205,669	A	*	6/1940	Pye	381/395
2,924,290	A	*	2/1960	Zuerker	381/189
D191,403	S	*	9/1961	Perry	D14/224
3,952,834	A	*	4/1976	Soma et al.	181/150
D254,130	S	*	2/1980	Iijima	D14/215
D254,252	S	*	2/1980	Matsubara	D14/216
D254,490	S	*	3/1980	Matsubara	D14/215
D273,008	S	*	3/1984	Ishizaki	D14/215
4,492,826	A	*	1/1985	Chiu	381/182
4,552,242	A	*	11/1985	Kashiwabara	181/144
D284,002	S	*	5/1986	Takagi	D14/215
D284,281	S	*	6/1986	Takagi	D14/215
4,672,675	A	*	6/1987	Powell et al.	381/182
4,811,406	A	*	3/1989	Kawachi	381/186
4,837,839	A	*	6/1989	Andrews	381/182
D320,020	S	*	9/1991	Iwano	D14/216
D357,480	S	*	4/1995	Lumsden et al.	D14/224
D359,494	S	*	6/1995	Hedaya	D14/224
5,739,480	A	*	4/1998	Lin	181/144
6,095,278	A	*	8/2000	Lin	181/148
6,282,297	B1	*	8/2001	Lin	381/386
D476,313	S	*	6/2003	Rivera	D14/216
D480,070	S	*	9/2003	Hakoda	D14/216
D488,801	S	*	4/2004	Shindo et al.	D14/216
D489,359	S	*	5/2004	Hakoda	D14/215
D525,236	S	*	7/2006	Hibi	D14/221
D532,771	S	*	11/2006	Motoishi	D14/211
D534,158	S	*	12/2006	Yokoyama	D14/211
D541,790	S	*	5/2007	Yoon	D14/215
D547,751	S	*	7/2007	Shiono	D14/216

(Continued)

Primary Examiner — Paula Greene
(74) *Attorney, Agent, or Firm* — McDermott Will & Emery LLP

(57) **CLAIM**

The ornamental design for an in-vehicle speaker panel, as shown and described.

DESCRIPTION

FIG. **1** is a right-bottom perspective view of an in-vehicle speaker panel;
FIG. **2** is a left-bottom perspective view thereof;
FIG. **3** is a right-top perspective view thereof;
FIG. **4** is a left-top perspective view thereof;
FIG. **5** is a front view thereof;
FIG. **6** is a rear view thereof;
FIG. **7** is a left side view thereof;
FIG. **8** is a right side view thereof;
FIG. **9** is a top view thereof; and,
FIG. **10** is a bottom view thereof.
The broken lines in the drawings illustrate environmental subject matter only and form no part of the claimed design.

1 Claim, 9 Drawing Sheets

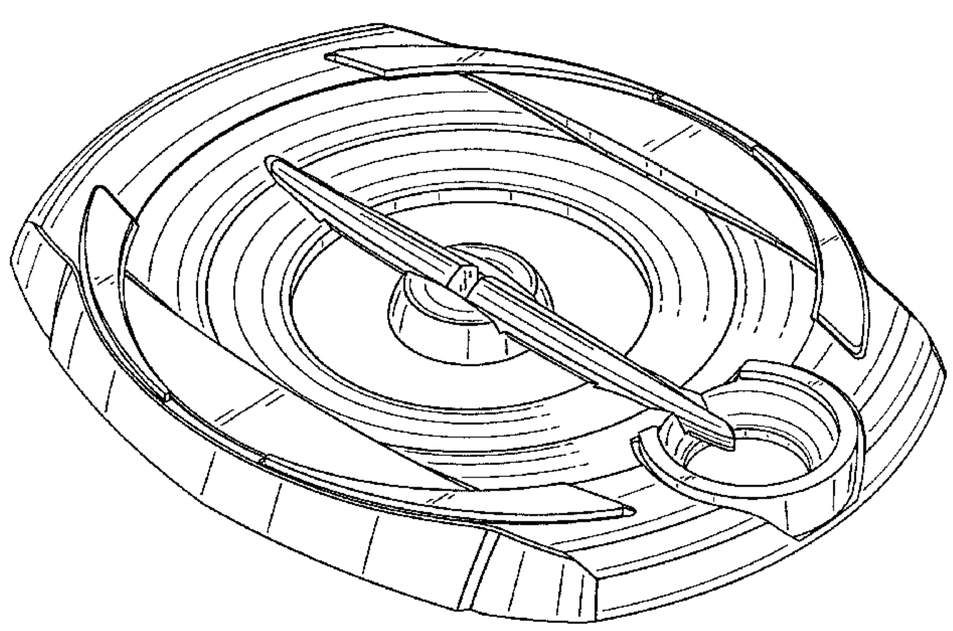

U.S. PATENT DOCUMENTS

D591,725 S * 5/2009 Komiyama D14/215
D593,070 S * 5/2009 Komiyama D14/215
D597,076 S * 7/2009 Komiyama D14/215
D602,909 S * 10/2009 Cho D14/215
D629,389 S * 12/2010 Kitayama D14/215
D656,486 S * 3/2012 Parraga Gimeno D14/216

* cited by examiner

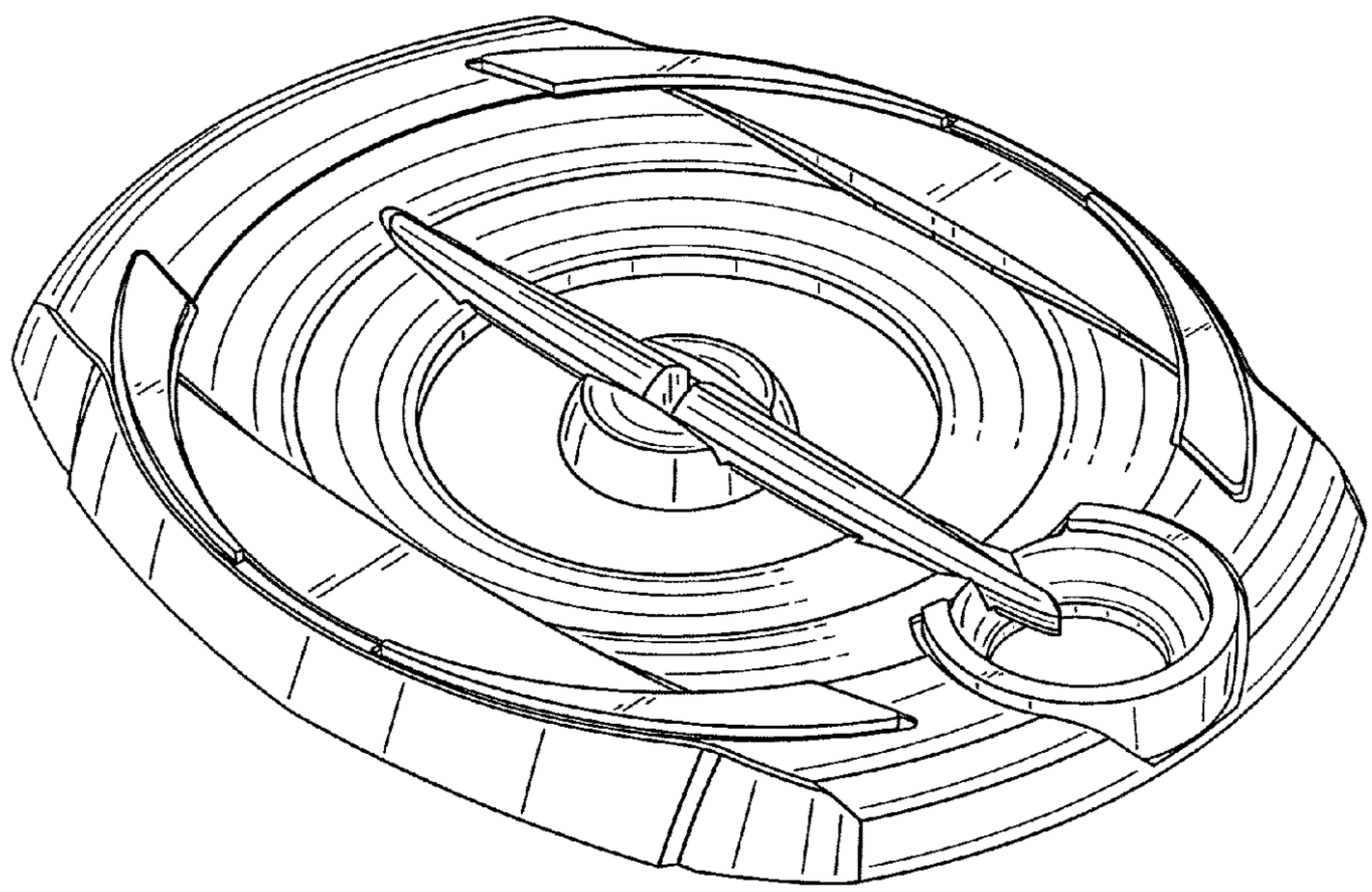

FIG. 1

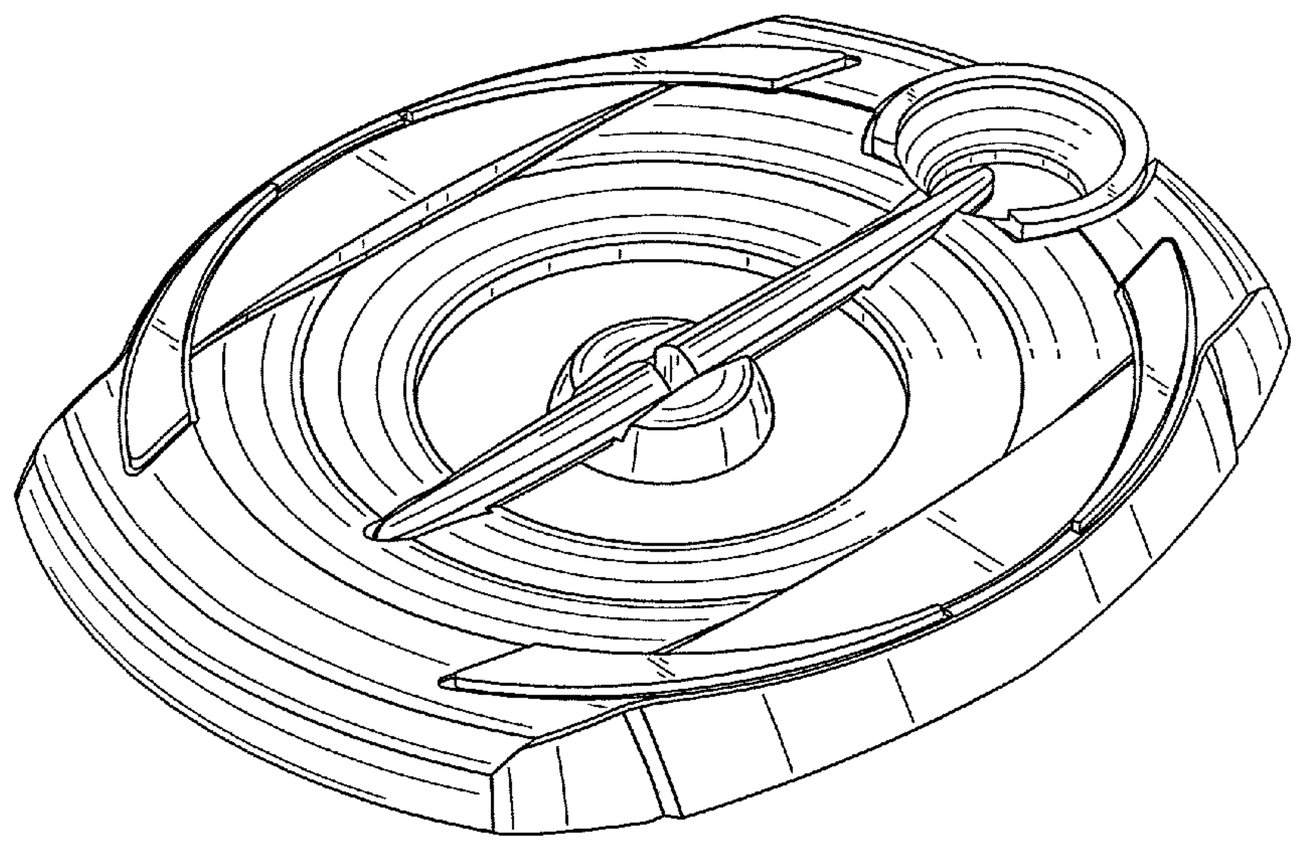

FIG. 2

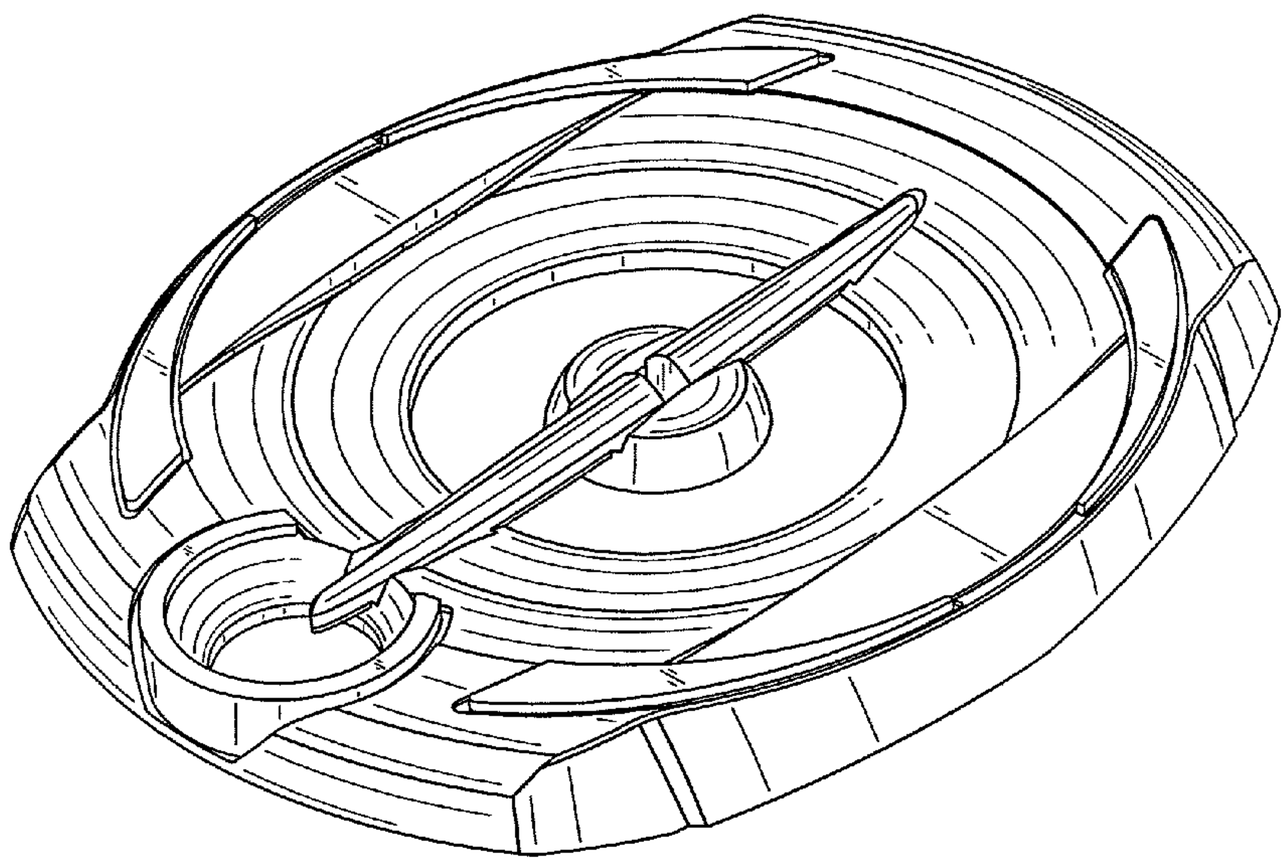

FIG. 3

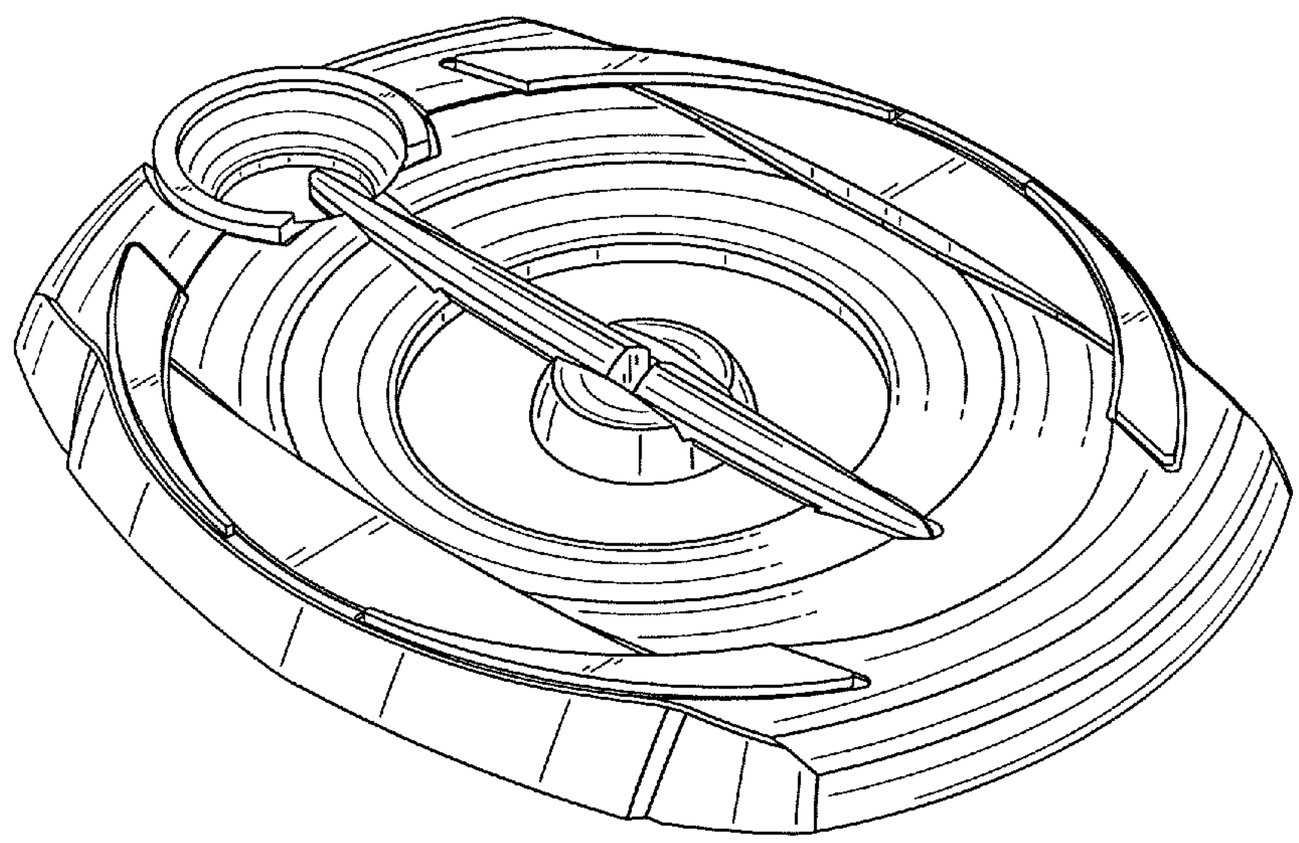

FIG. 4

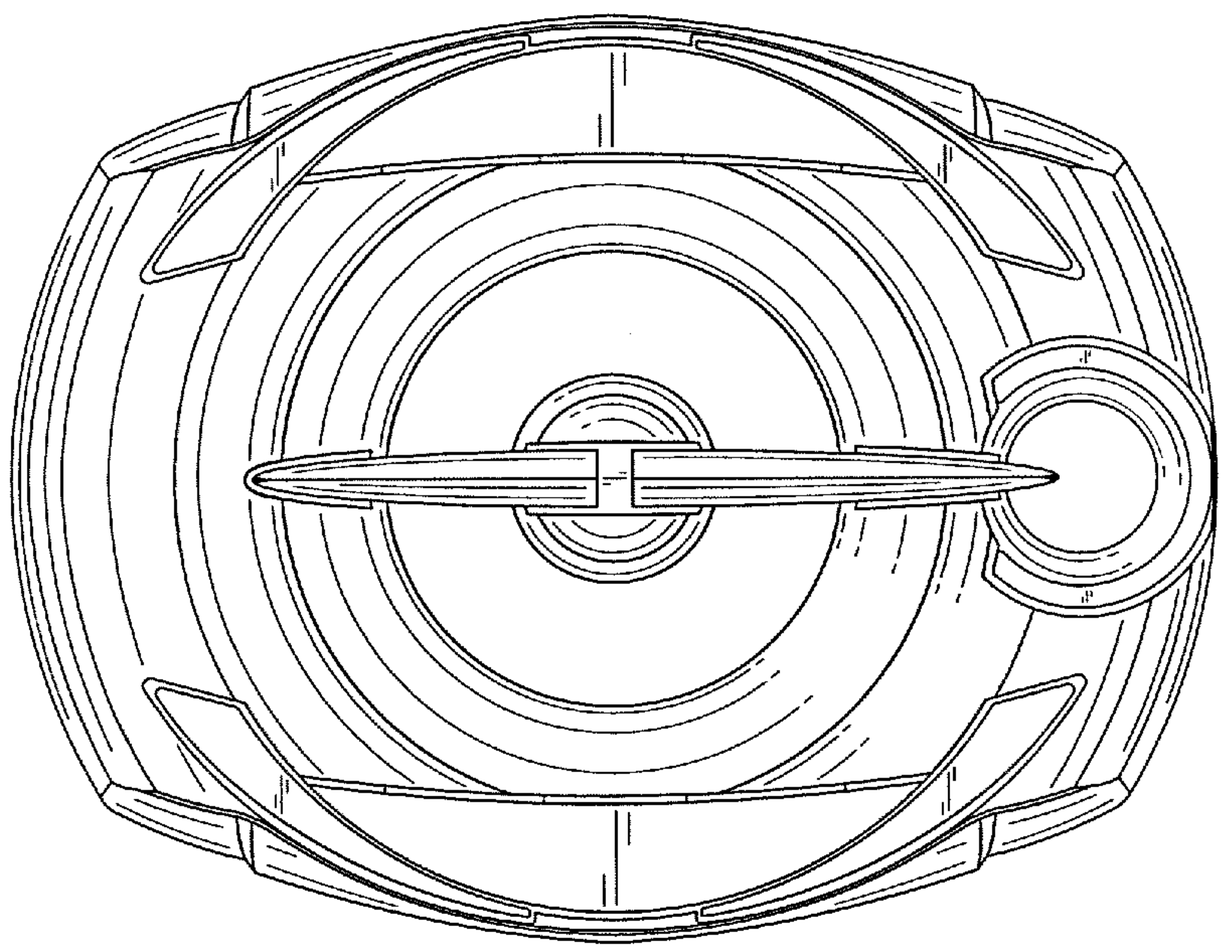

FIG. 5

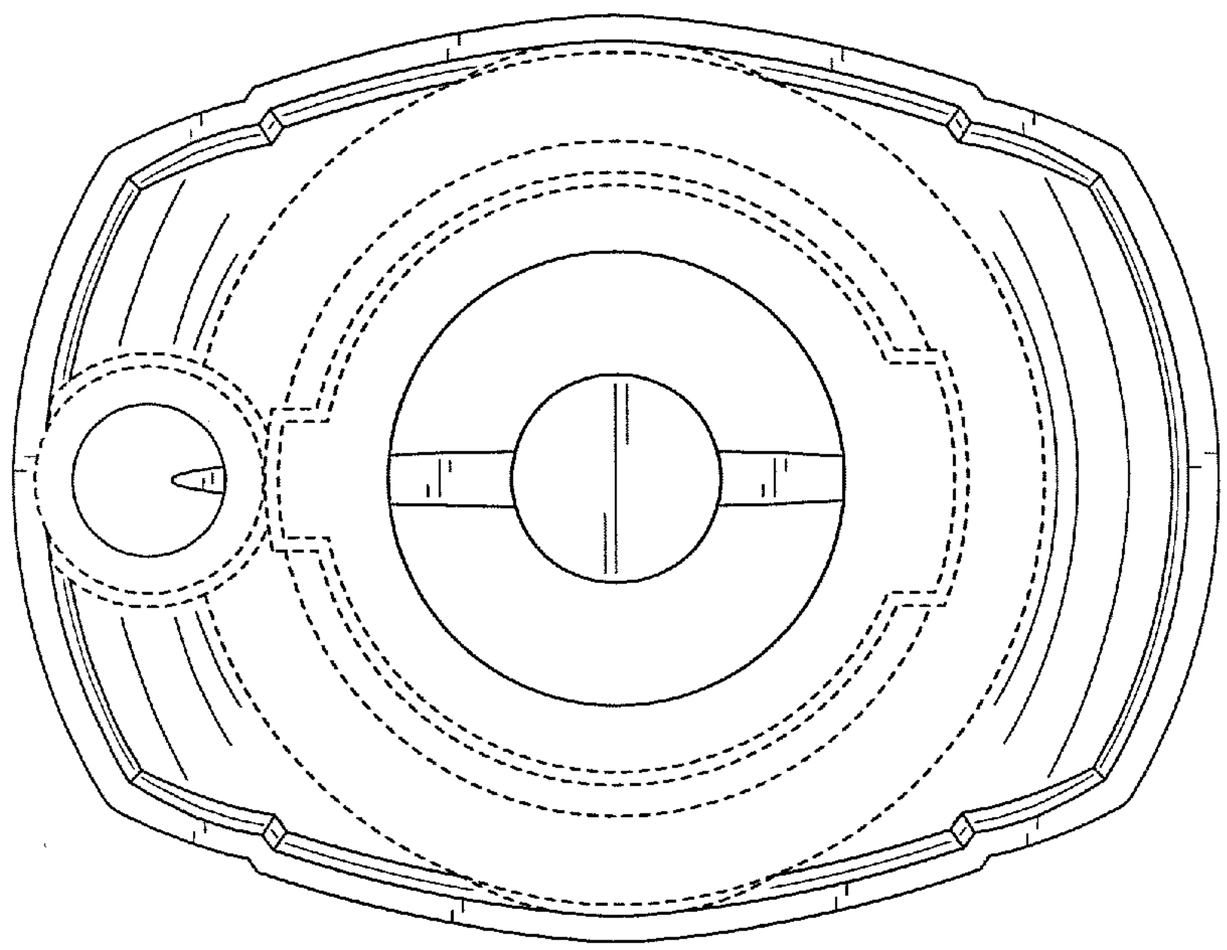

FIG. 6

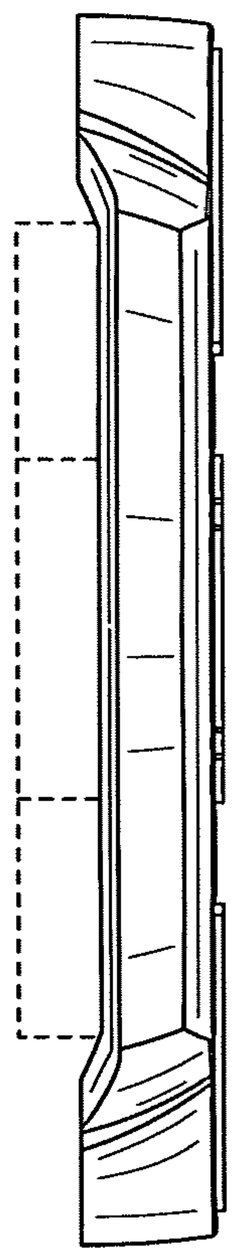

FIG. 7

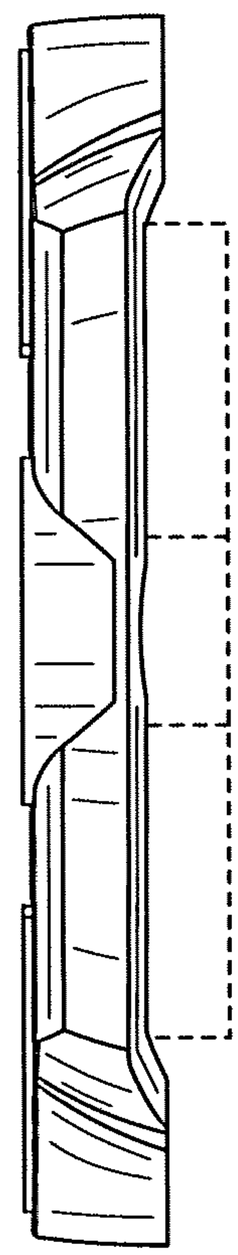

FIG. 8

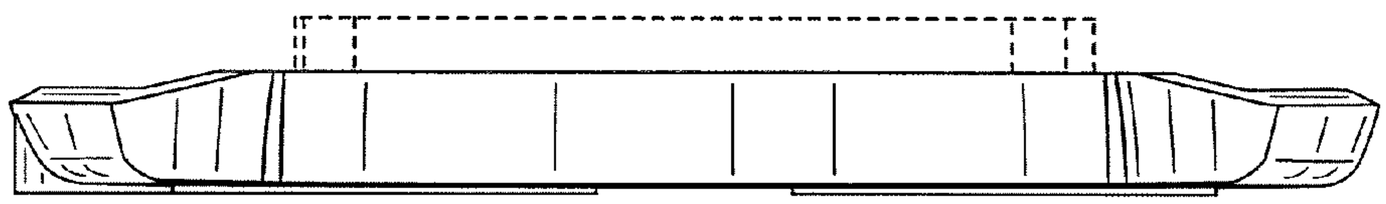

FIG. 9

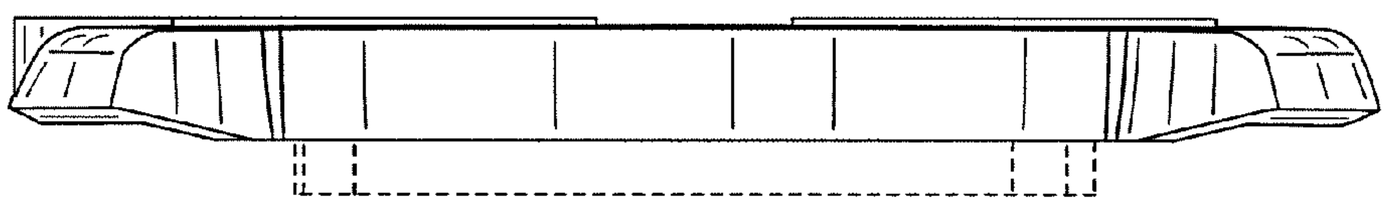

FIG. 10