US00D679707S

(12) United States Design Patent

Aarrestad et al.

(10) Patent No.: US D679,707 S
(45) Date of Patent: ** Apr. 9, 2013

(54) **DISPLAY SCREEN MODULE**

(75) Inventors: **Glenn R. G. Aarrestad**, Oslo (NO); **Evelyne Chaubert**, San Francisco, CA (US); **Eric W. Nichols**, San Francisco, CA (US); **Shawn E. Bender**, Campbell, CA (US); **Danny H. B. Chan**, Frenont, CA (US); **Torence Lu**, Fremont, CA (US); **Daniel C. Nunez**, Sunnyvale, CA (US); **David M. Sanguinet**, San Jose, CA (US); **Kenneth D. Wood**, Portola Valley, CA (US); **Terri L. Cruse**, Santa Clara, CA (US); **Emory T. Richards**, Santa Clara, CA (US); **Dan Harden**, Palo Alto, CA (US); **Christopher L. Whittall**, Los Gatos, CA (US); **Kyle A. Buzzard**, Campbell, CA (US)

(73) Assignee: **Cisco Technology, Inc.**, San Jose, CA (US)

(**) Term: **14 Years**

(21) Appl. No.: **29/416,712**

(22) Filed: **Mar. 26, 2012**

(51) **LOC (9) Cl.** **14-02**

(52) **U.S. Cl.** **D14/373**; D14/127

(58) **Field of Classification Search** D14/371–375, D14/125–129, 336, 337; 341/12; 345/104, 345/156, 168, 173; 348/180, 184, 325, 739; 349/1, 2, 11, 62; 361/679.05–679.07, 679.21; D6/300, 308

See application file for complete search history.

(56) **References Cited**

U.S. PATENT DOCUMENTS

3,909,525	A	*	9/1975	Fagan	348/383
D340,229	S	*	10/1993	Drabczyk et al.	D14/306
D448,024	S	*	9/2001	Kim	D14/337
D581,380	S	*	11/2008	Derocher et al.	D14/127
D610,105	S	*	2/2010	Graham et al.	D14/127
7,679,639	B2		3/2010	Harrell et al.	
D616,403	S		5/2010	Roed et al.	
7,710,448	B2		5/2010	De Beer et al.	
D618,644	S	*	6/2010	Graham et al.	D14/127
D623,619	S		9/2010	Roed et al.	
D624,514	S		9/2010	Roed et al.	
D626,102	S		10/2010	Buzzard et al.	
D626,103	S		10/2010	Buzzard et al.	
D628,175	S		11/2010	Desai et al.	
D628,968	S		12/2010	Desai et al.	
D634,745	S	*	3/2011	Park et al.	D14/373
D649,951	S		12/2011	Roed et al.	

* cited by examiner

Primary Examiner — Freda S Nunn

(74) *Attorney, Agent, or Firm* — Edell, Shapiro & Finnan, LLC

(57) **CLAIM**

The ornamental design for a display screen module, as shown and described.

DESCRIPTION

This application is related to the following commonly owned and co-pending design patent applications: "Video Conference System Light Reflector," filed Mar. 26, 2012 U.S. patent application Ser. No. 29/416,716; "Video Conference System," filed Mar. 26, 2012 U.S. patent application Ser. No. 29/416,717, and "Video Conference System," filed Mar. 26, 2012 U.S. patent application Ser. No. 29/416,718. These applications are hereby incorporated by reference herein in their entireties.

FIG. **1** is a front, right perspective view from above of a display screen module according to the present invention;

FIG. **2** is a top plan view of the display screen module of FIG. **1**;

FIG. **3** is a bottom plan view of the display screen module of FIG. **1**;

FIG. **4** is a front elevation view of the display screen module of FIG. **1**;

FIG. **5** is a rear elevation view of the display screen module of FIG. **1**;

FIG. **6** is a right side elevation view of the display screen module of FIG. **1**;

FIG. **7** is a left side elevation view of the display screen module of FIG. **1**; and,

FIG. **8** is another front, right perspective view from above of the display screen module of FIG. **1**.

Any portions shown in phantom are for illustrative purposes only and form no part of the claimed design.

1 Claim, 8 Drawing Sheets

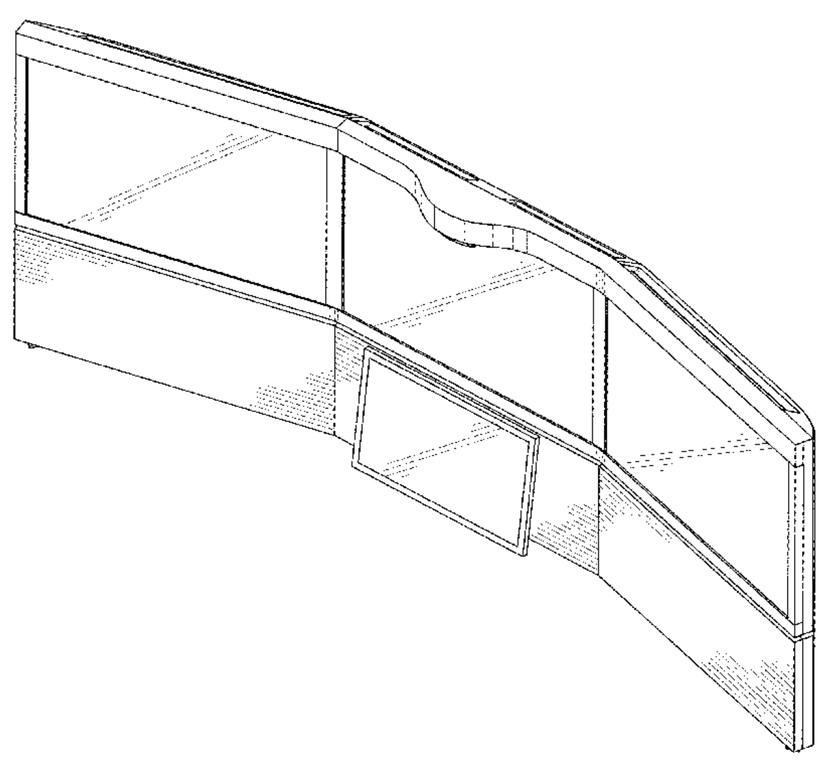

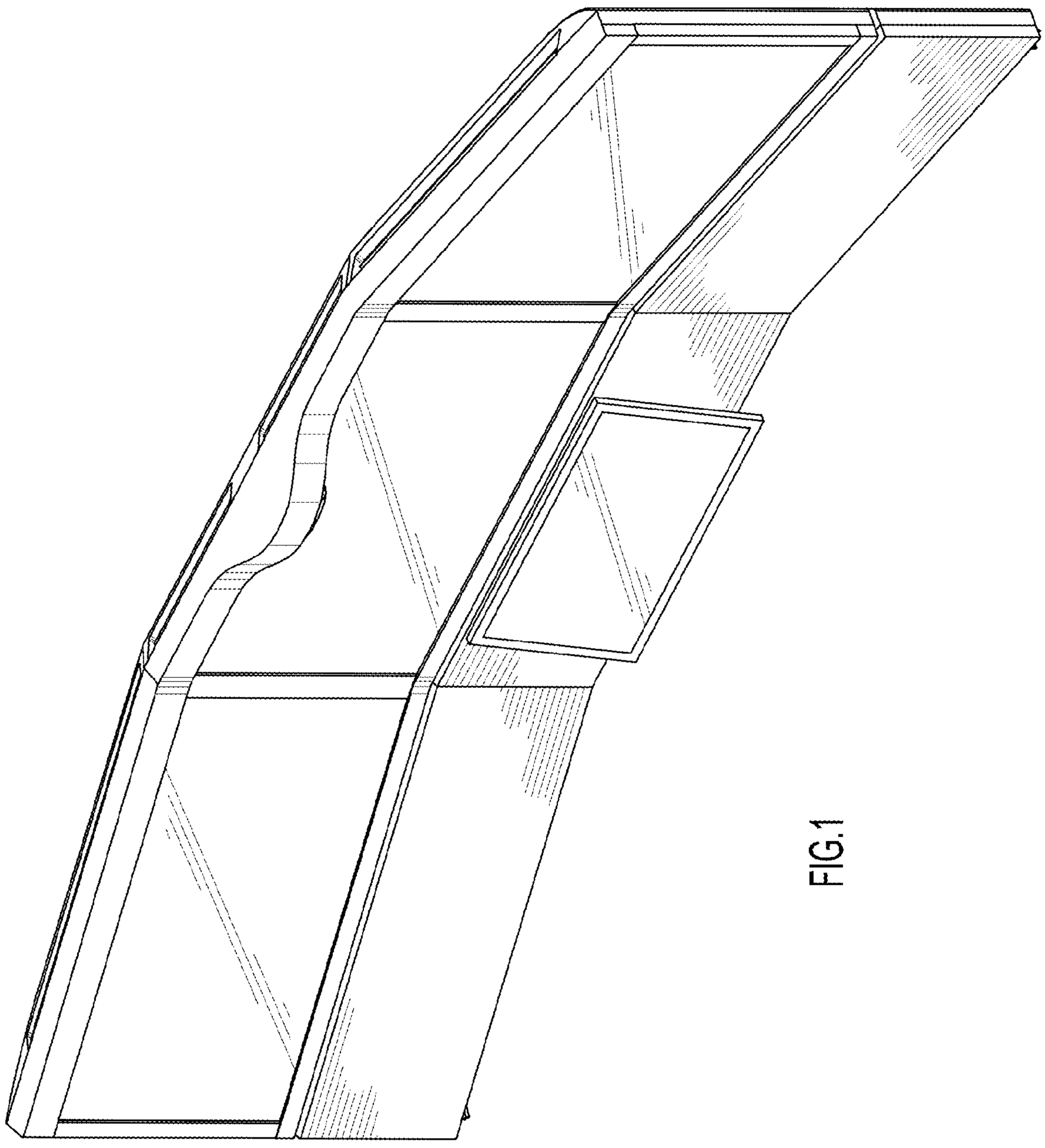

FIG.1

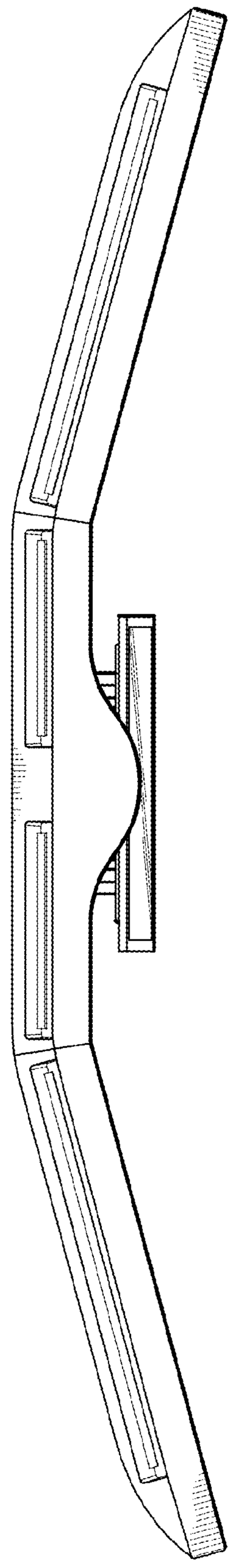

FIG.2

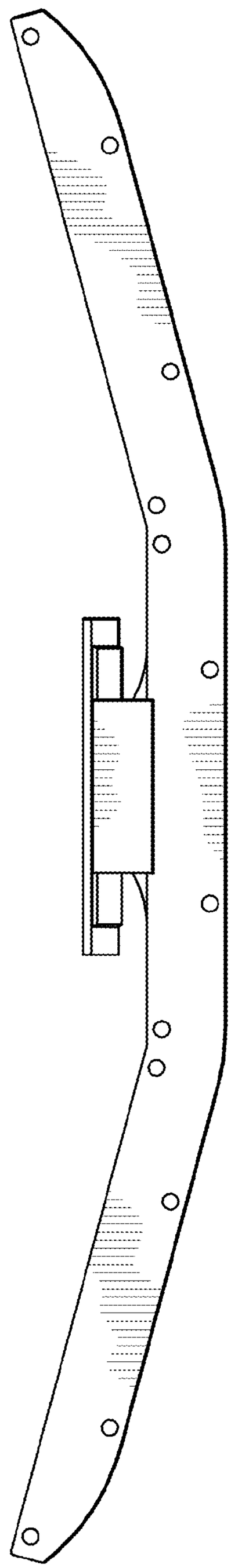

FIG.3

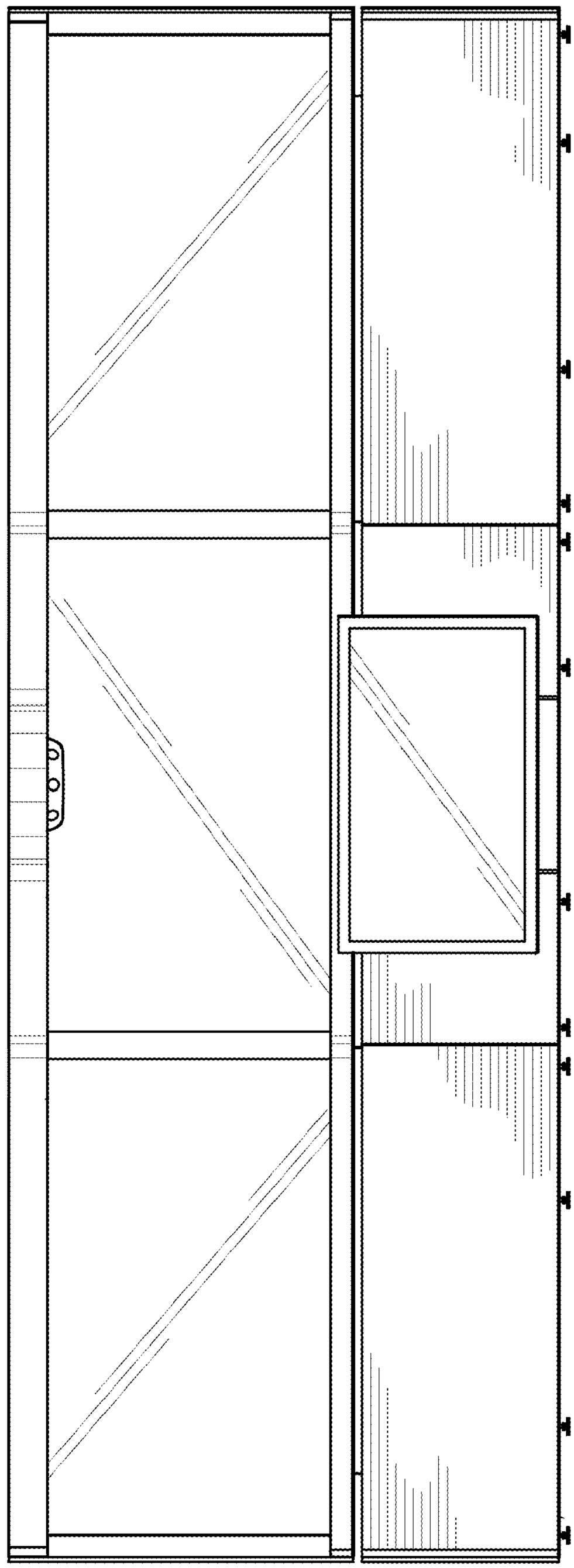

FIG.4

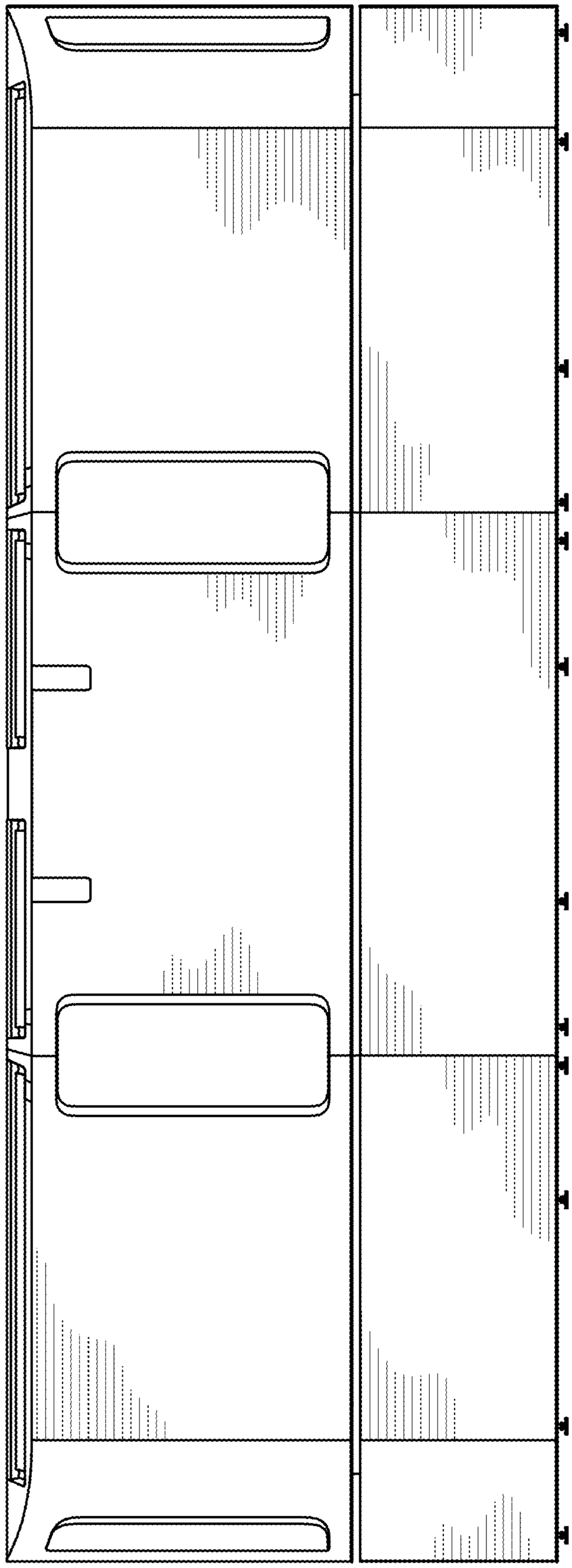

FIG.5

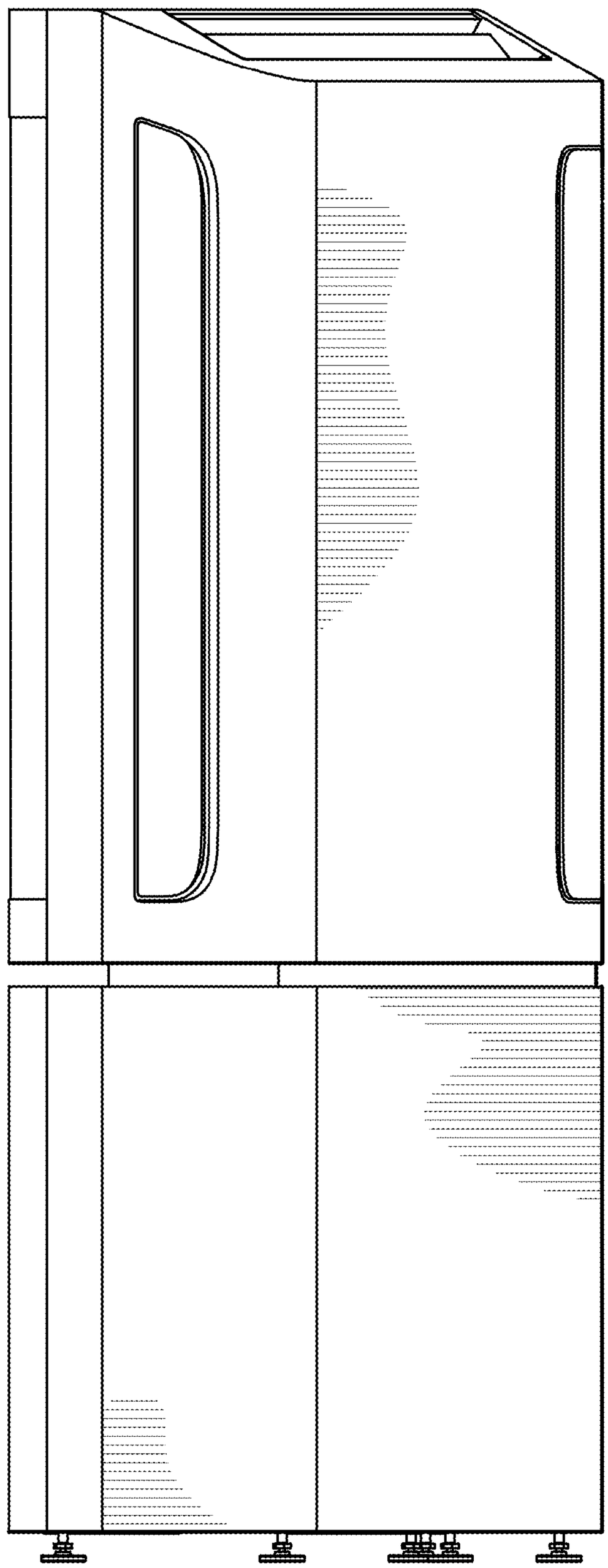

FIG.6

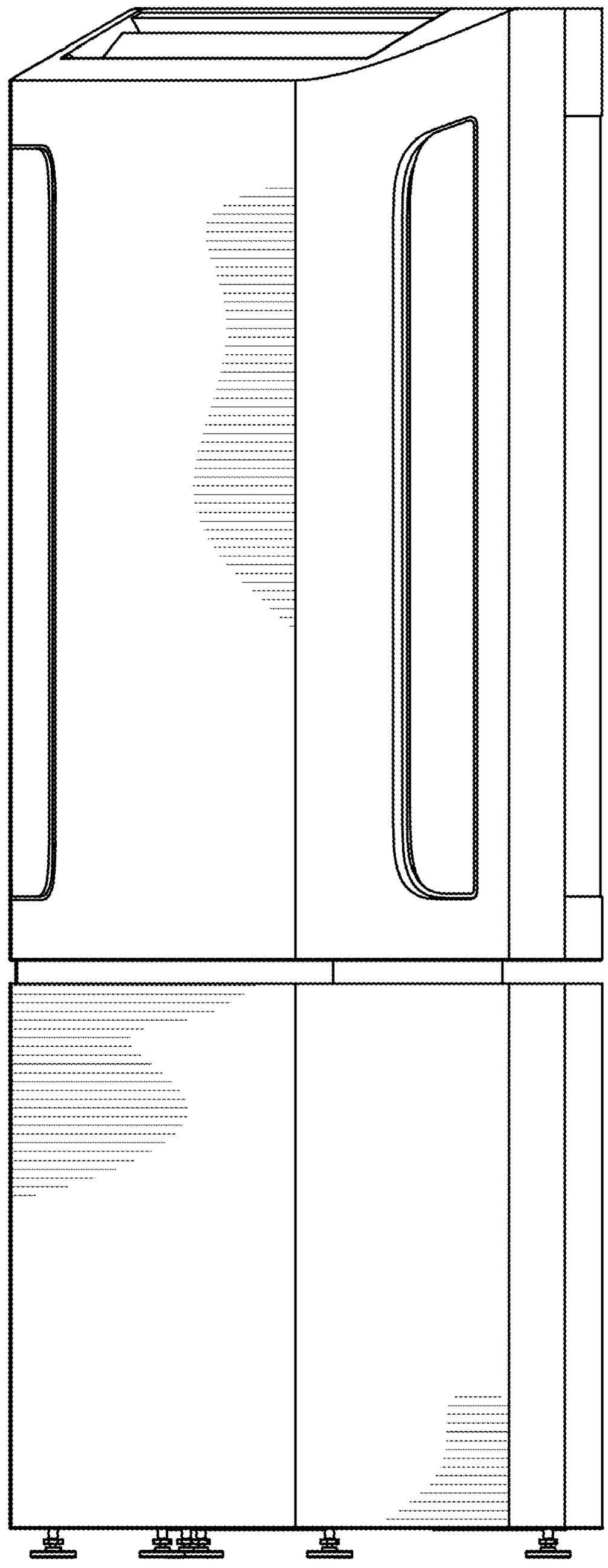

FIG.7

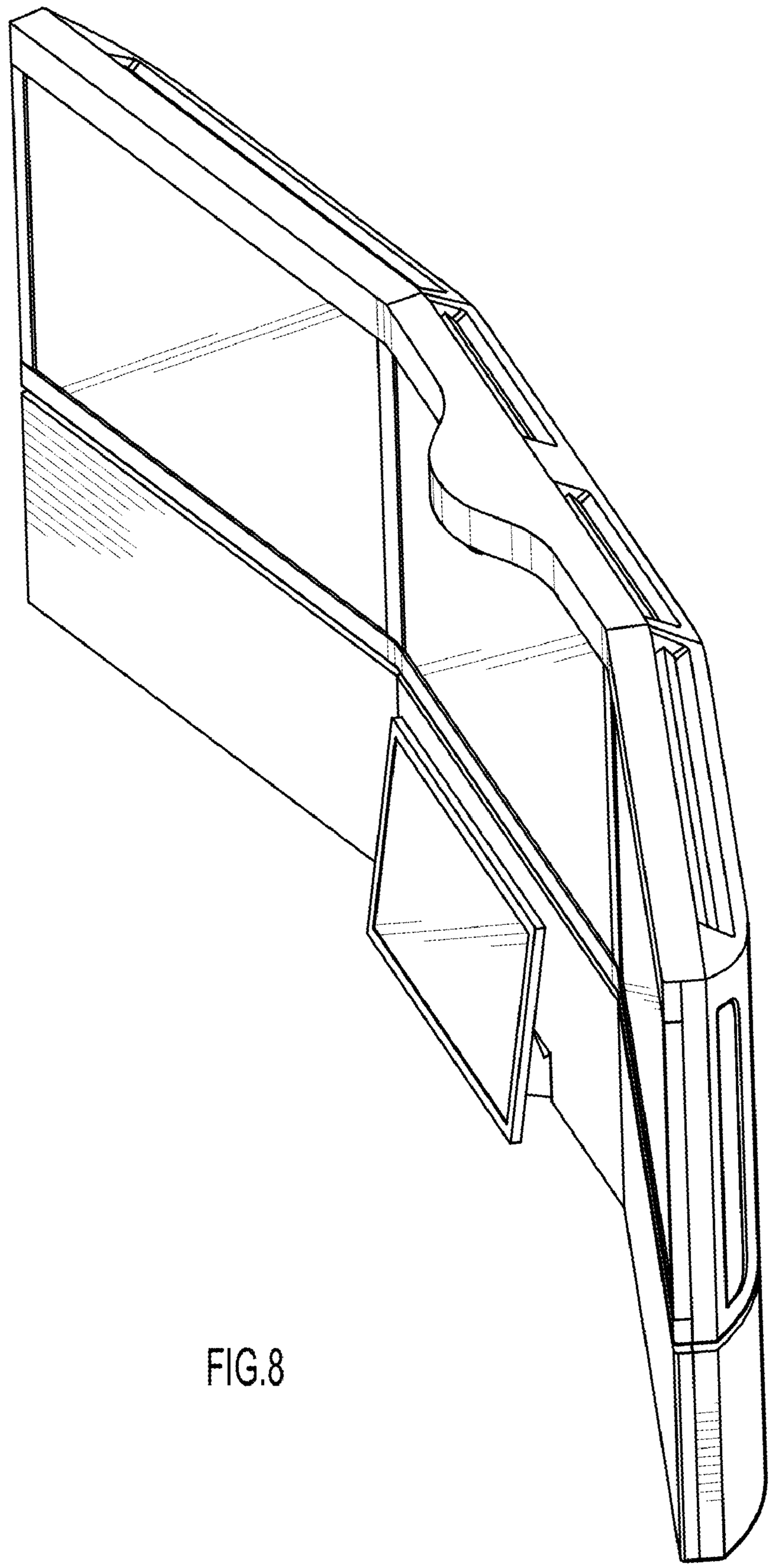

FIG.8

UNITED STATES PATENT AND TRADEMARK OFFICE

CERTIFICATE OF CORRECTION

PATENT NO. : D679,707 S
APPLICATION NO. : 29/416712
DATED : April 9, 2013
INVENTOR(S) : Aarrestad et al.

It is certified that error appears in the above-identified patent and that said Letters Patent is hereby corrected as shown below:

On the Title Page of the Patent, Item (75) Inventors, the named inventor Emory T. Richards city and state should be changed from "Santa Clara, CA" to -- Sudbury, MA --.

Signed and Sealed this
Eleventh Day of June, 2013

Teresa Stanek Rea
Acting Director of the United States Patent and Trademark Office