US00D679258S

(12) United States Design Patent

Moore et al.

(10) Patent No.: US D679,258 S
(45) Date of Patent: ** Apr. 2, 2013

(54) **ELECTRONIC BOX FOR DIGITAL RECYCLING TIMER AND CONTROLLER**

(75) Inventors: **Gregory J. Moore**, Santa Rosa, CA (US); **Ronald K. Aschermann**, Santa Rosa, CA (US); **Russell P. Winnett**, Glen Ellen, CA (US)

(73) Assignee: **Sentinel Global Product Solutions Inc.**, Santa Rosa, CA (US)

(**) Term: **14 Years**

(21) Appl. No.: **29/393,749**

(22) Filed: **Jun. 8, 2011**

(51) **LOC (9) Cl.** **13-03**

(52) **U.S. Cl.** **D13/162.1**; D13/184

(58) **Field of Classification Search** D13/162, D13/162.1, 164, 177, 184; D10/52; 174/66; 200/293, 308; 220/3.2, 3.3, 3.8; 361/600, 361/601, 622, 641; 700/11, 17, 65, 83, 306; 439/535

See application file for complete search history.

(56) **References Cited**

U.S. PATENT DOCUMENTS

D269,605	S	*	7/1983	Provanzano et al.	D13/162.1
D275,851	S	*	10/1984	Bambeck	D13/164
D280,406	S	*	9/1985	Walker	D14/339
4,688,146	A	*	8/1987	Newmark et al.	361/672
5,239,129	A	*	8/1993	Ehrenfels	174/51
5,245,507	A	*	9/1993	Ericksen	361/641
D360,620	S	*	7/1995	Gehrs et al.	D13/184
5,506,767	A	*	4/1996	Naylor	700/11
D400,513	S	*	11/1998	Seirio	D13/184
D402,275	S	*	12/1998	Korhonen	D13/184
D437,586	S	*	2/2001	Sonntag	D13/184

* cited by examiner

Primary Examiner — Selina Sikder

(74) *Attorney, Agent, or Firm* — Craig M. Stainbrook; Stainbrook & Stainbrook, LLP

(57) **CLAIM**

The ornamental design for a electronic box for digital recycling timer and controller, as shown and described.

DESCRIPTION

FIG. **1** is a upper right front perspective view of the design;
FIG. **2** is a front elevation view of the design;
FIG. **3** is a left side elevation view of the design, the right side elevation being a mirror image thereof;
FIG. **4** is a rear view in elevation;
FIG. **5** is a top plan view of the design; and,
FIG. **6** is a bottom plan view of the design.
The broken lines shown in the drawings are included for purposes of illustrating environmental structures only and form no part of the claimed design.

1 Claim, 5 Drawing Sheets

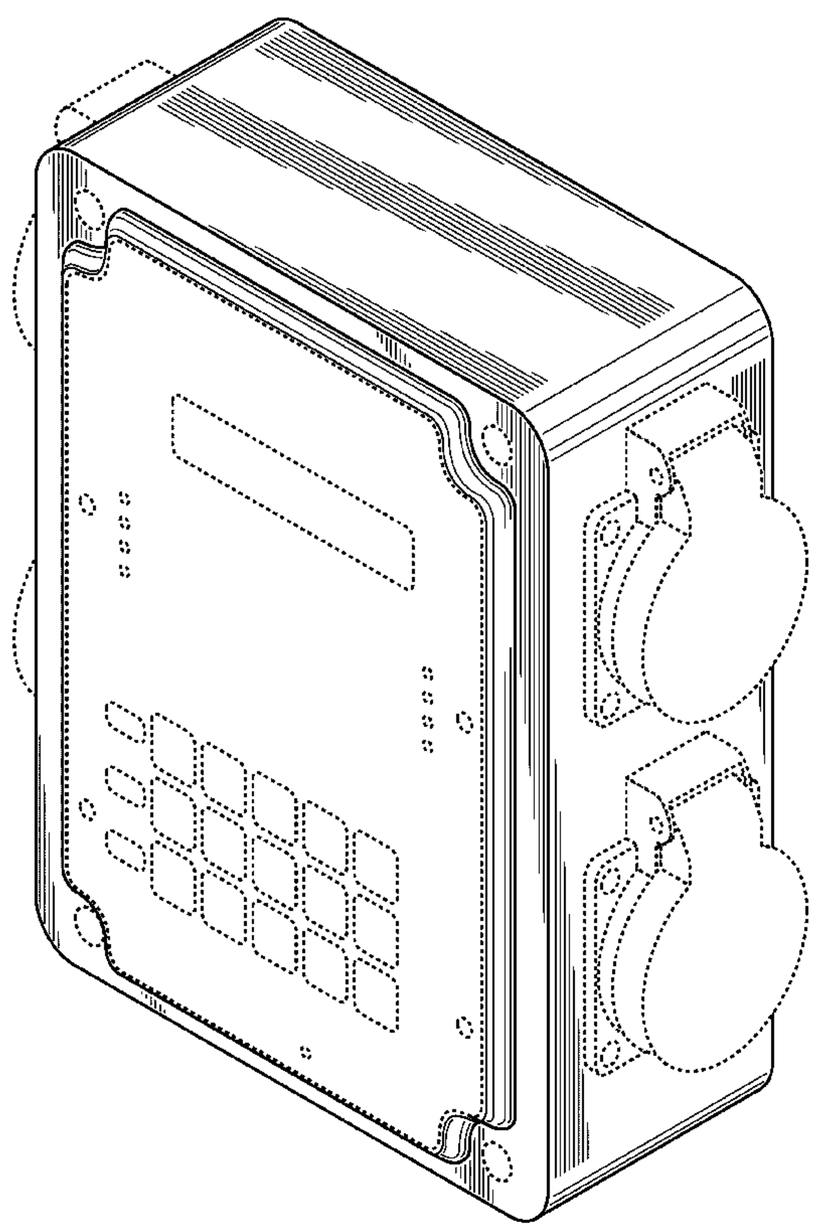

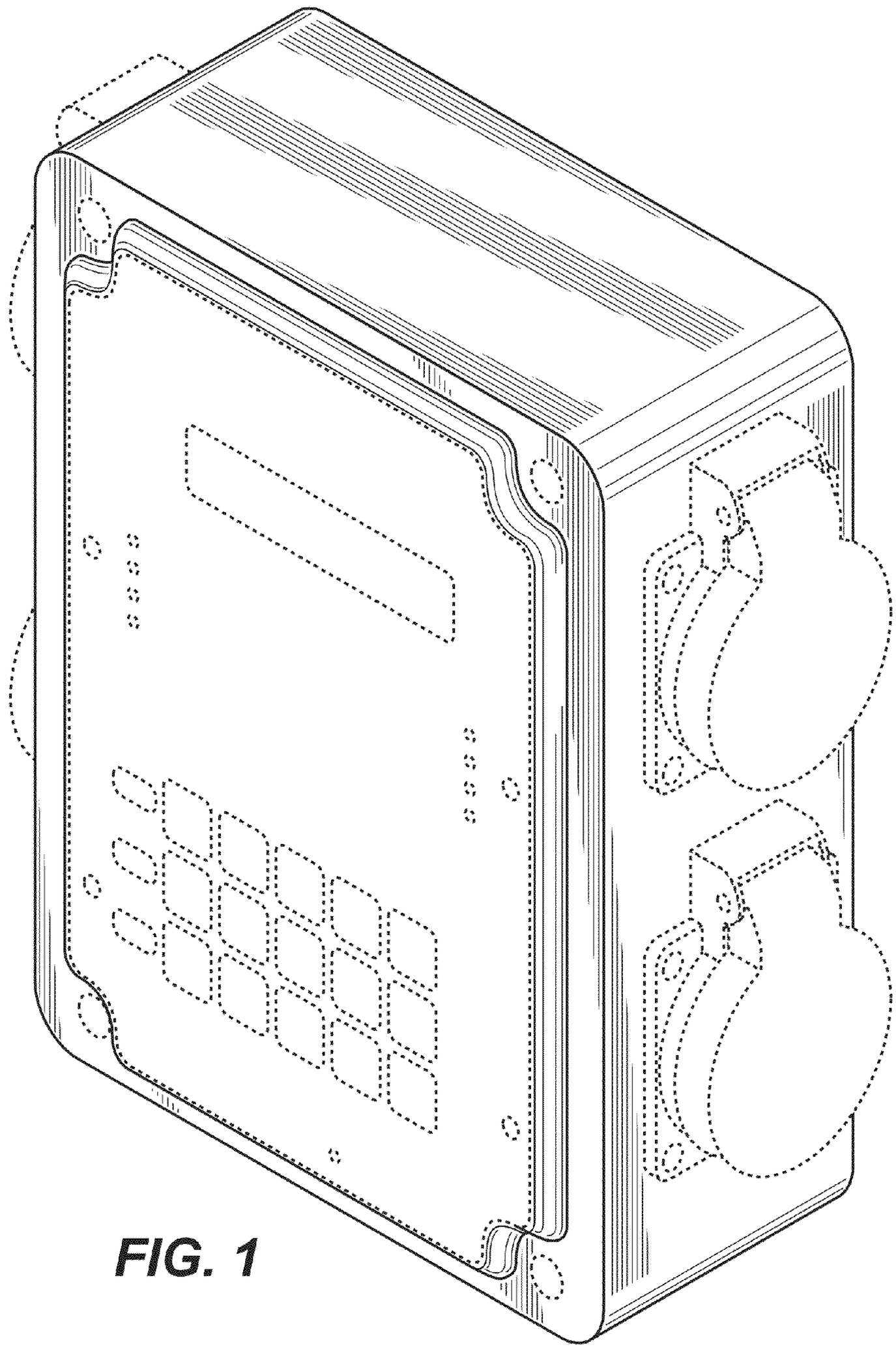

FIG. 1

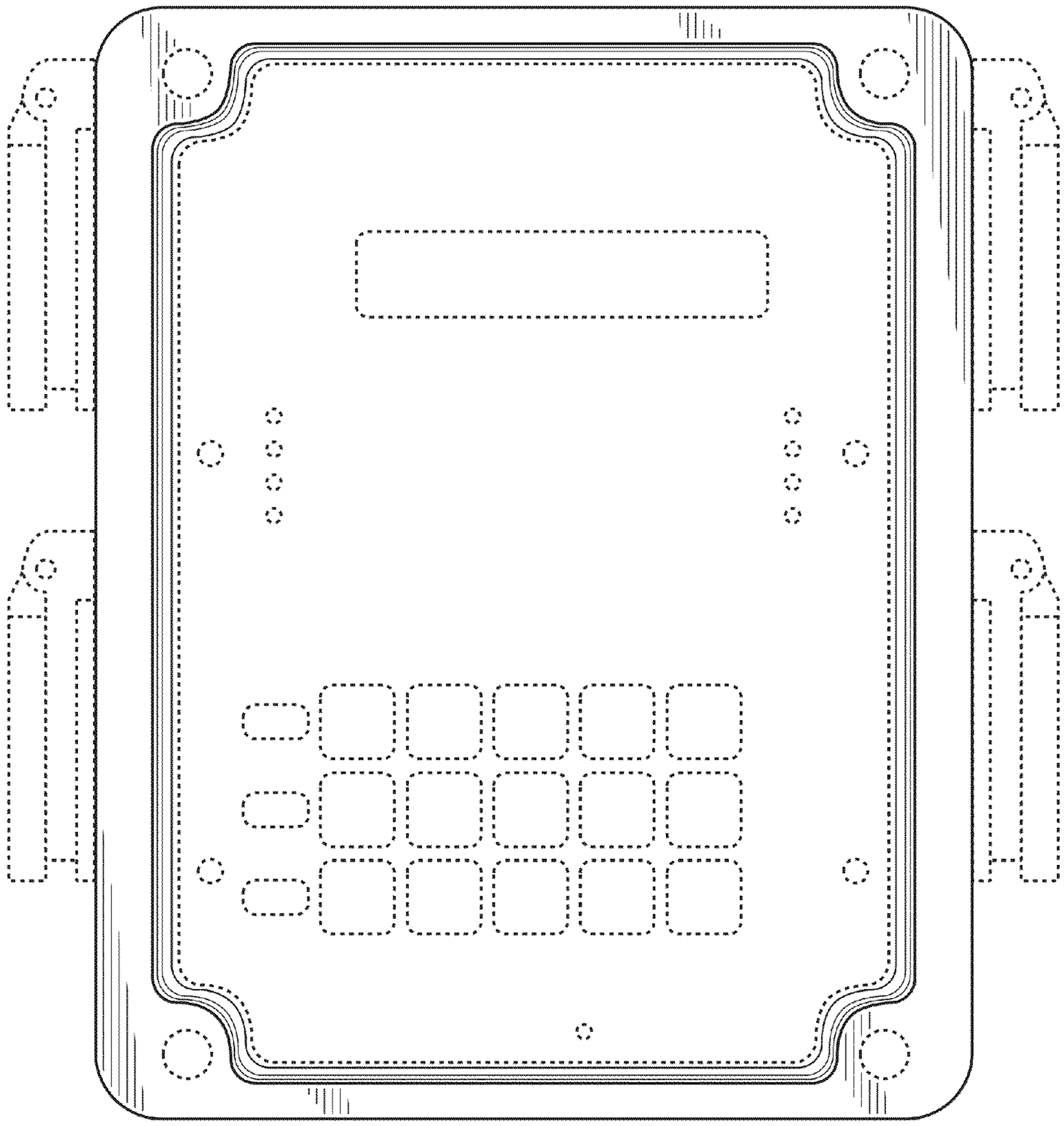

FIG. 2

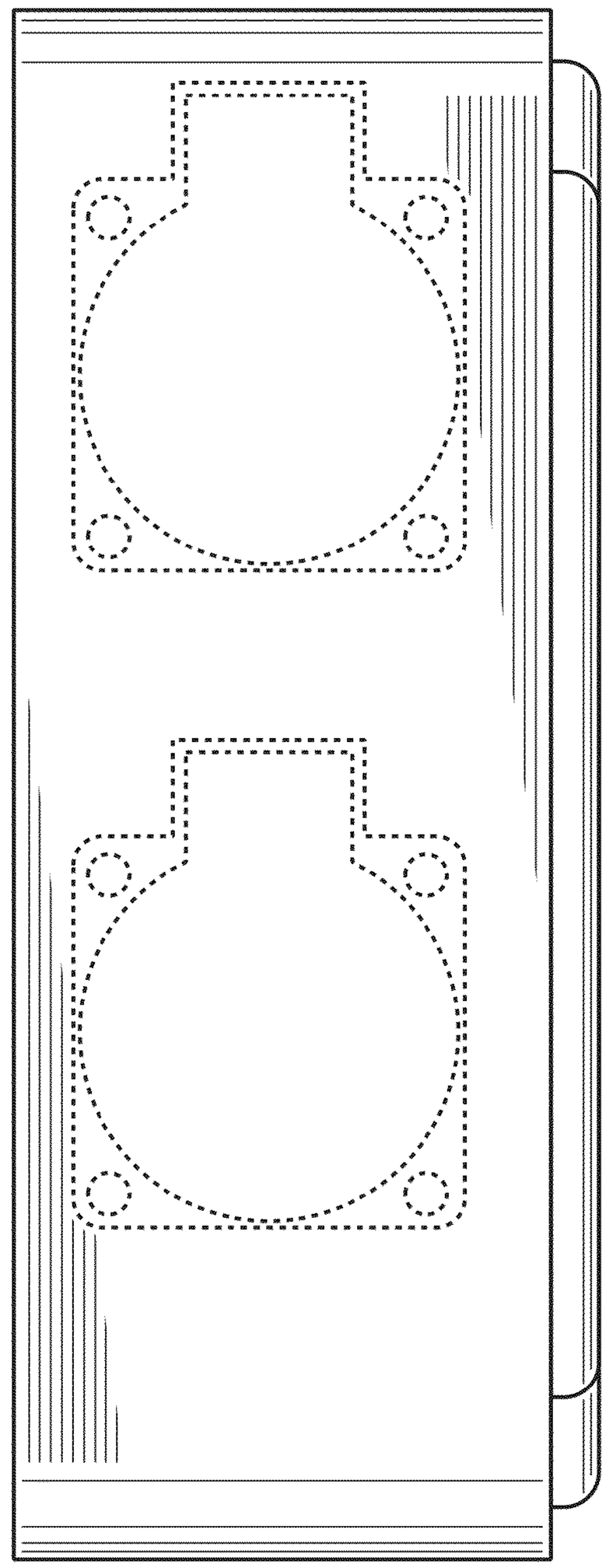

FIG. 3

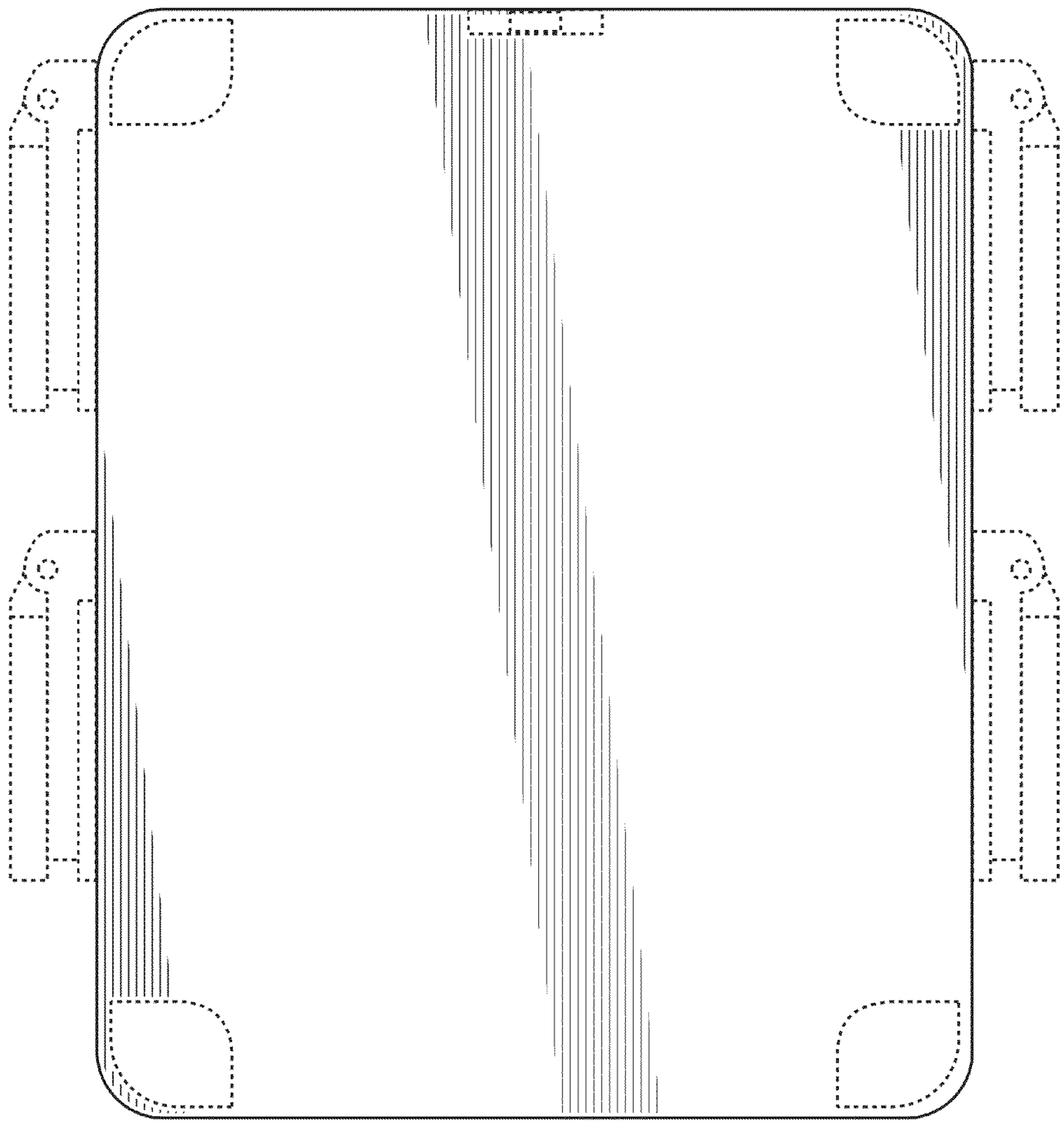

FIG. 4

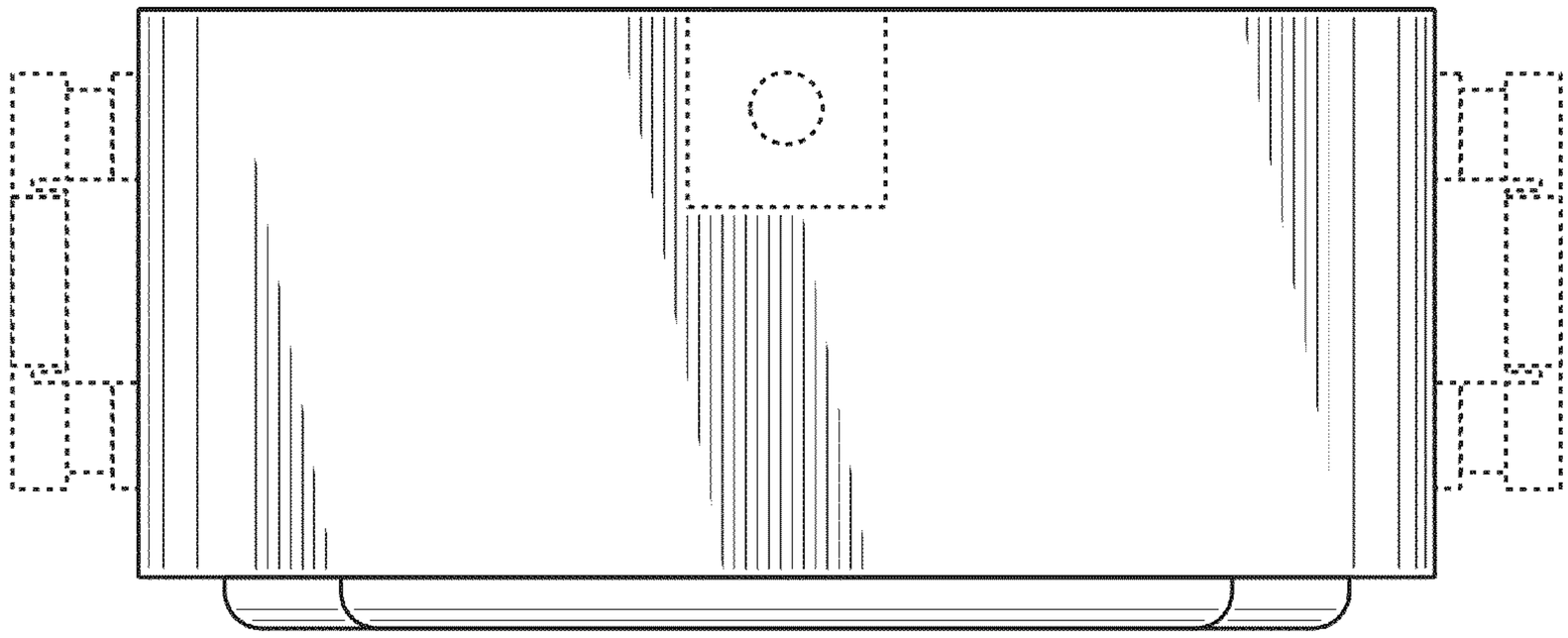

FIG. 5

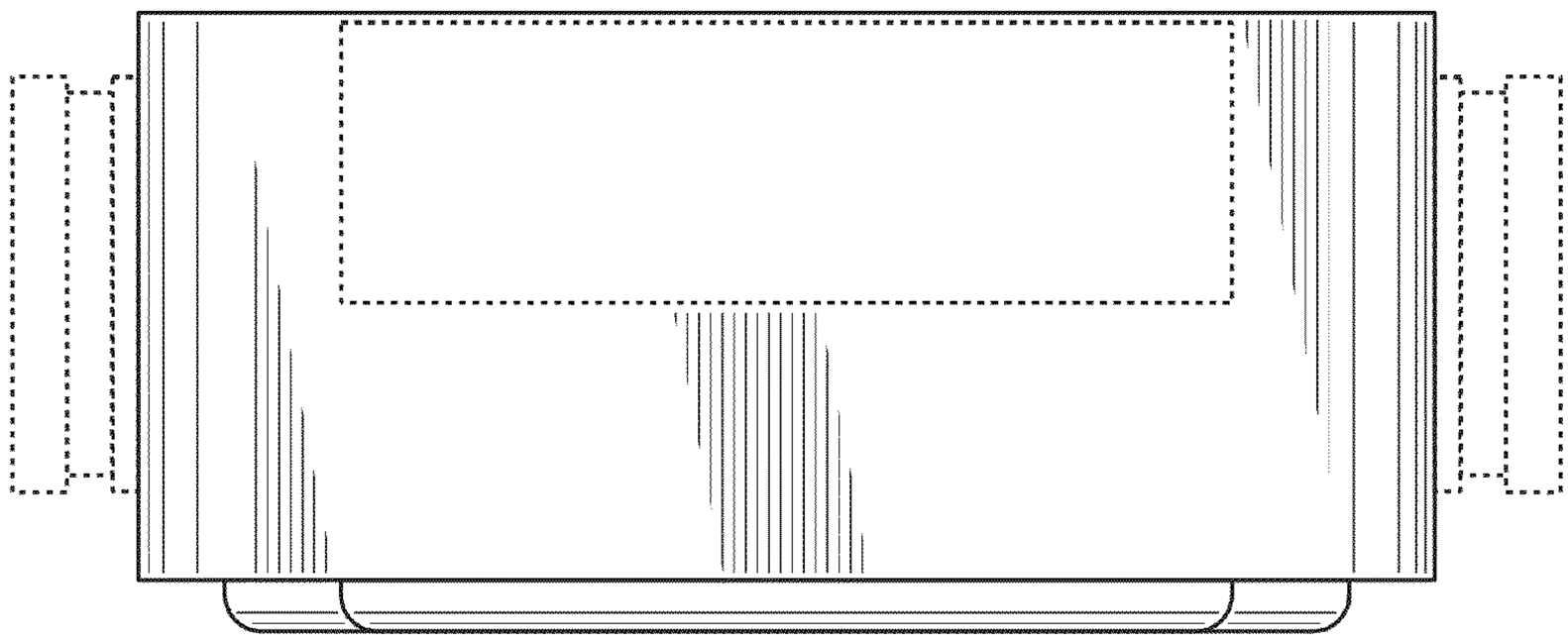

FIG. 6