US00D678288S

# (12) United States Design Patent

Feldstein et al.

(10) Patent No.: US D678,288 S
(45) Date of Patent: ** Mar. 19, 2013

(54) **CONTROL FRAME ASSEMBLY FOR A SMART TOUCHPANEL DEVICE**

(75) Inventors: **George Feldstein**, Cresskill, NJ (US); **Jeffrey Ausfeld**, New York, NY (US)

(73) Assignee: **Crestron Electronics Inc.**, Rockleigh, NJ (US)

(**) Term: **14 Years**

(21) Appl. No.: **29/369,642**

(22) Filed: **Sep. 10, 2010**

(51) **LOC (9) Cl.** ..... **14-02**

(52) **U.S. Cl.** ..... **D14/439**

(58) **Field of Classification Search** ..... D14/250, D14/251, 253, 240, 217, 496, 440, 203.3, D14/203.4, 203.5, 203.8, 432, 439, 300, 447, D14/346, 443; D3/218, 215, 201; 220/4.02; 248/309.1, 459; 361/679.56, 679.03; 379/426, 379/433.11, 455; 455/575.1, 575.8; 190/100; 206/305, 320; D8/356

See application file for complete search history.

(56) **References Cited**

U.S. PATENT DOCUMENTS

| | | | | | |
|---|---|---|---|---|---|
| 4,044,980 | A | * | 8/1977 | Cummins | 248/456 |
| D397,679 | S | * | 9/1998 | Hawkins et al. | D14/342 |
| D434,034 | S | * | 11/2000 | Burke et al. | D14/341 |
| D450,054 | S | * | 11/2001 | Dworkin | D14/443 |
| D523,424 | S | * | 6/2006 | Chen et al. | D14/248 |
| D523,425 | S | * | 6/2006 | Ye et al. | D14/248 |
| D541,799 | S | * | 5/2007 | Andre et al. | D14/375 |
| D586,803 | S | * | 2/2009 | Whitehorn et al. | D14/346 |
| D608,785 | S | * | 1/2010 | Hsu et al. | D14/443 |
| D641,756 | S | * | 7/2011 | Hsieh et al. | D14/440 |
| D653,543 | S | * | 2/2012 | Yourist et al. | D9/502 |
| D663,294 | S | * | 7/2012 | Buxton | D14/250 |
| D665,807 | S | * | 8/2012 | Ferrari et al. | D14/439 |

* cited by examiner

*Primary Examiner* — Cynthia Underwood

(74) *Attorney, Agent, or Firm* — Crestron Electronics Inc.

(57) **CLAIM**

The ornamental design for a control frame assembly for a smart touchpanel device, as shown and described.

**DESCRIPTION**

FIG. **1** shows a front left isometric view of a control frame assembly for a smart touchpanel device.

FIG. **2** shows a back right isometric view of the front portion of the control frame assembly for a smart touchpanel device shown in an open configuration and separated from the back portion of the control frame assembly.

FIG. **3** shows a back right isometric view of the front portion of the control frame assembly and a back portion of the control frame assembly for a smart touchpanel device separated from each other in the open configuration.

FIG. **4** shows a front elevational view of the control frame assembly for a smart touchpanel device.

FIG. **5** shows a left side view of the control frame assembly for a smart touchpanel device.

FIG. **6** shows a right side view of the control frame assembly for a smart touchpanel device.

FIG. **7** shows a back elevational view of the control frame assembly for a smart touchpanel device.

FIG. **8** shows a front left isometric view of the control frame assembly for a smart touchpanel device docked on an associated stand.

FIG. **9** shows a front elevational view of the control frame assembly for a smart touchpanel device docked on the associated stand.

FIG. **10** shows a left side view of the control frame assembly for a smart touchpanel device docked on the associated stand.

FIG. **11** shows a right side view of the control frame assembly for a smart touchpanel device docked on the associated stand; and,

FIG. **12** shows a back elevational view of the control frame assembly for a smart touchpanel device docked on the associated stand.

The broken line portions of the figure drawings are included to show unclaimed subject matter only and form no part of the claimed design.

**1 Claim, 11 Drawing Sheets**

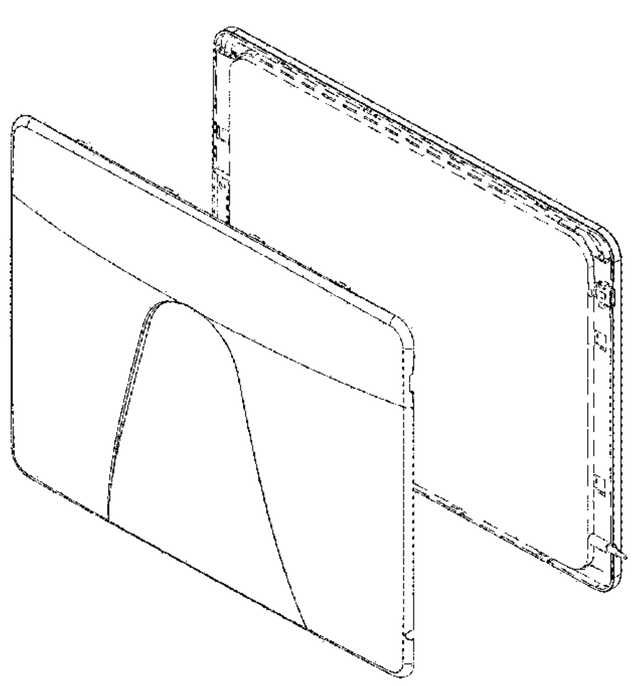

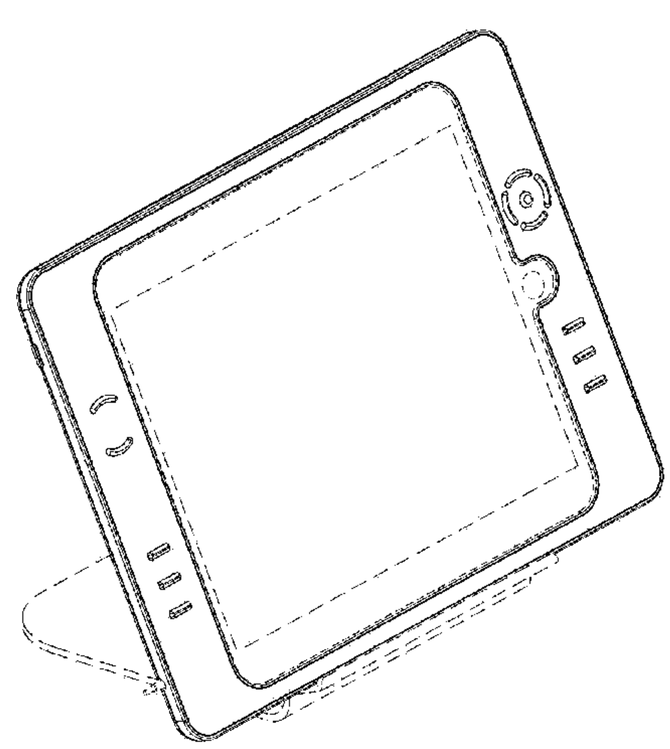

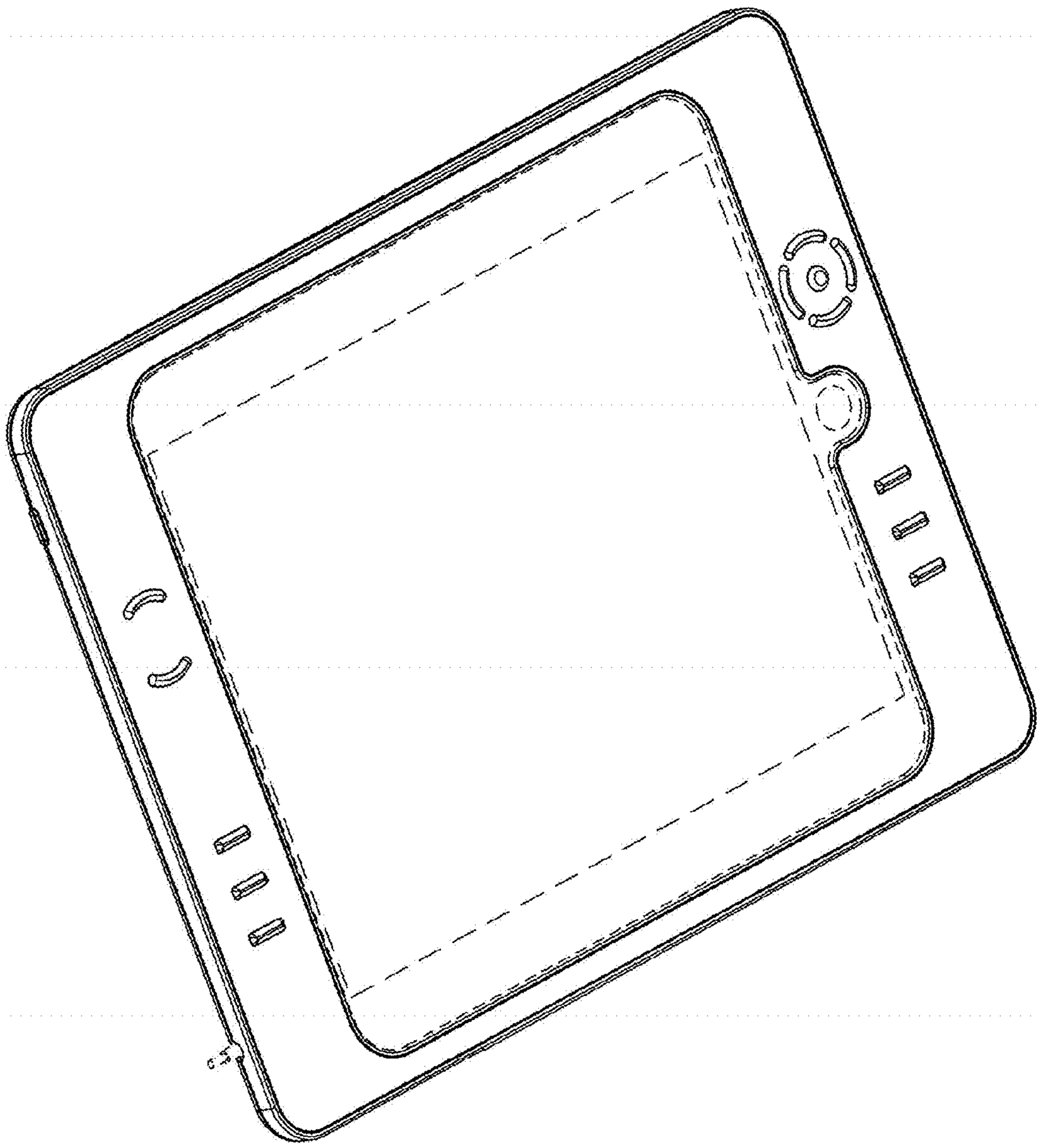

FIG. 1

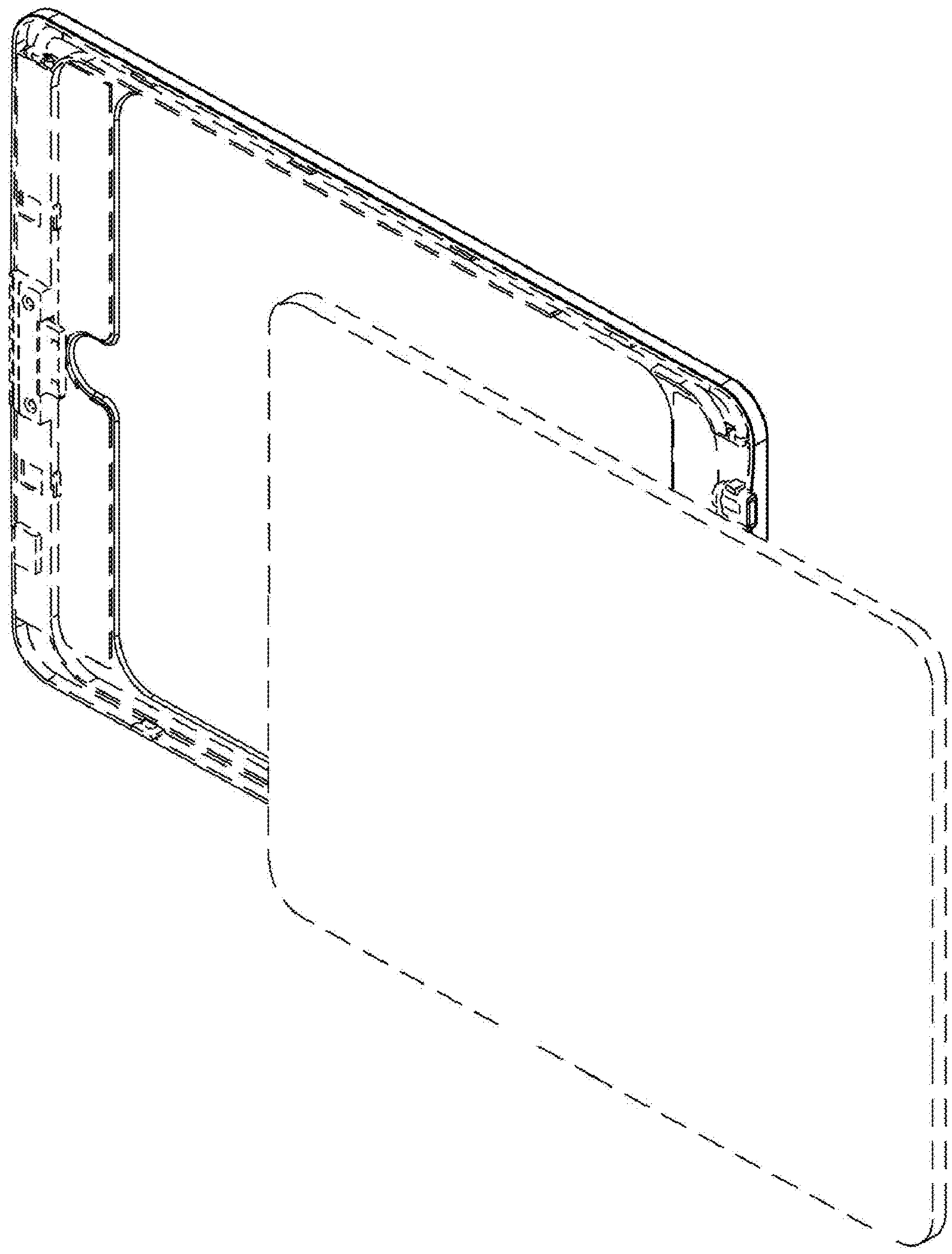

FIG. 2

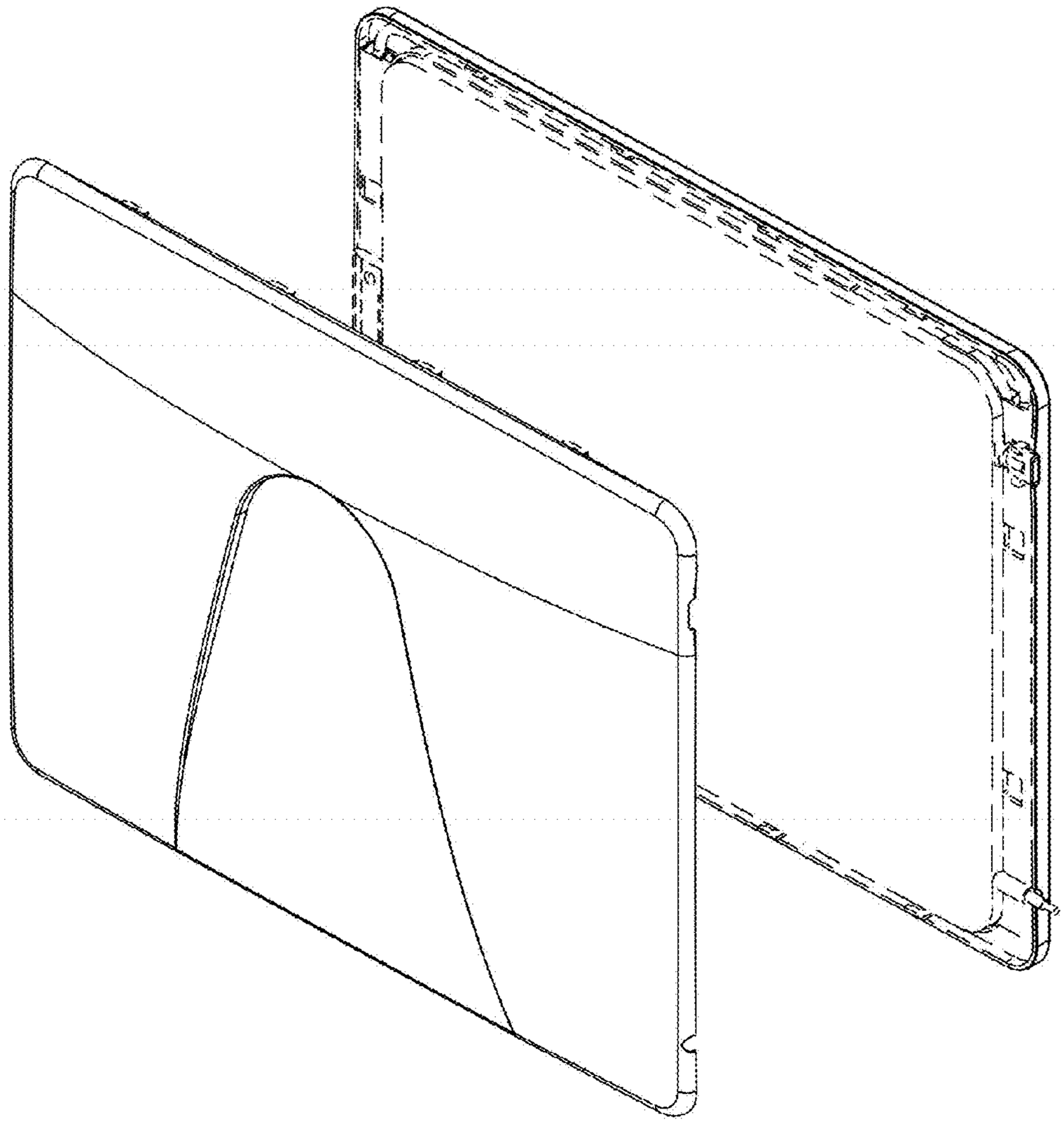

FIG 3

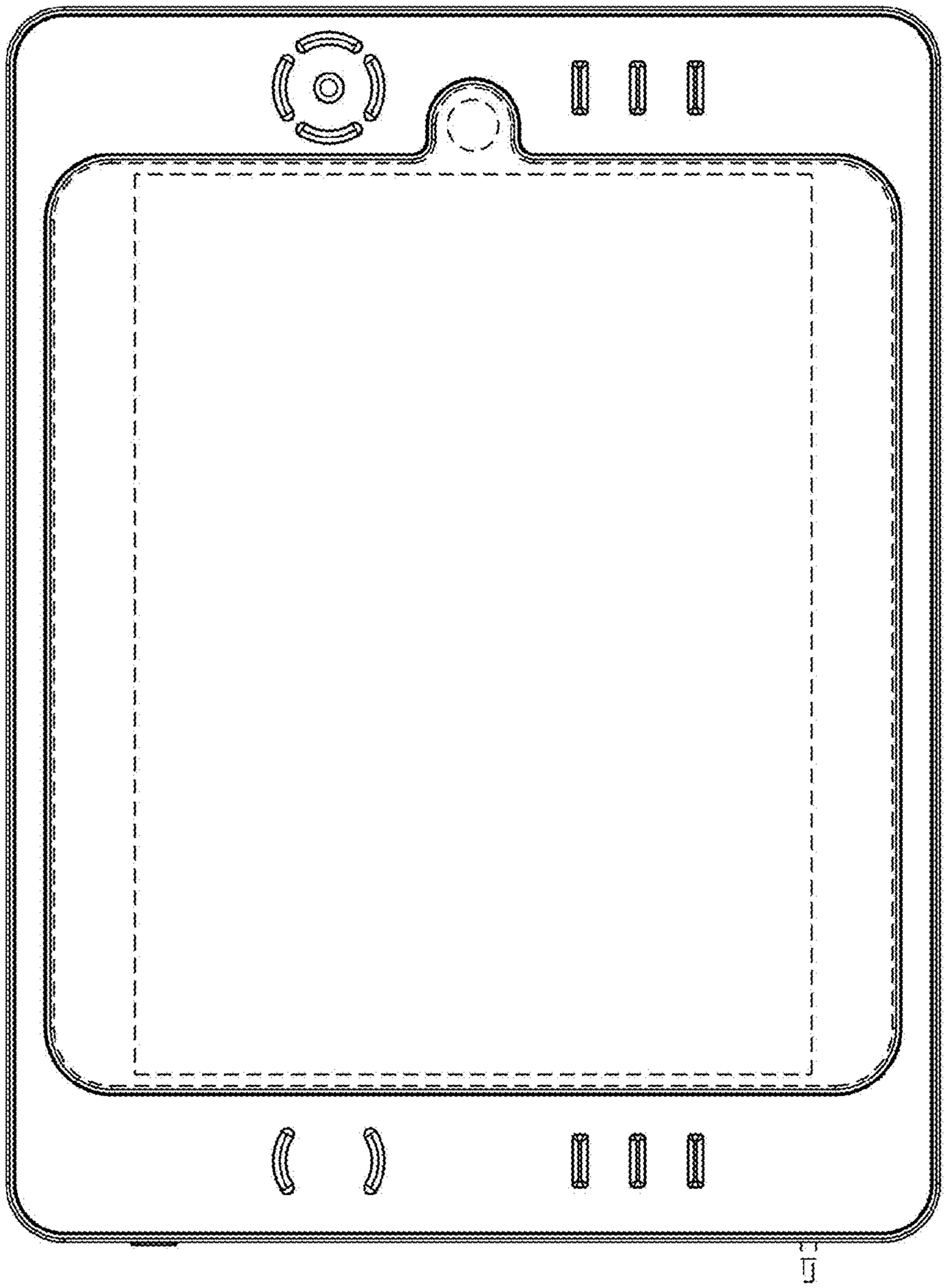

FIG. 4

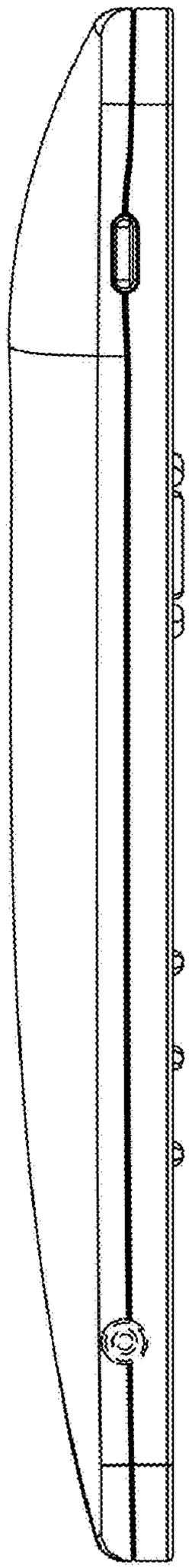

FIG. 5

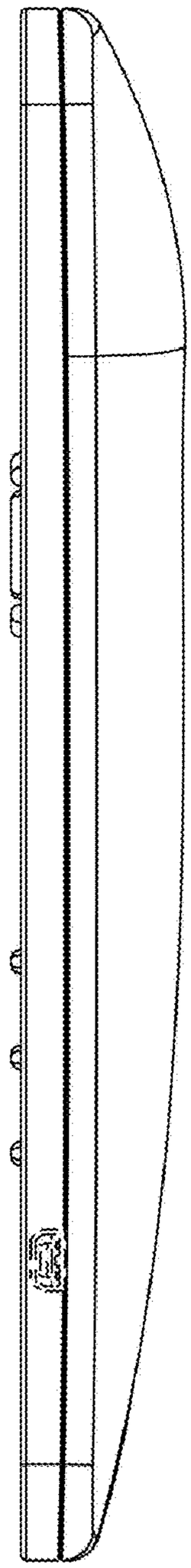

FIG. 6

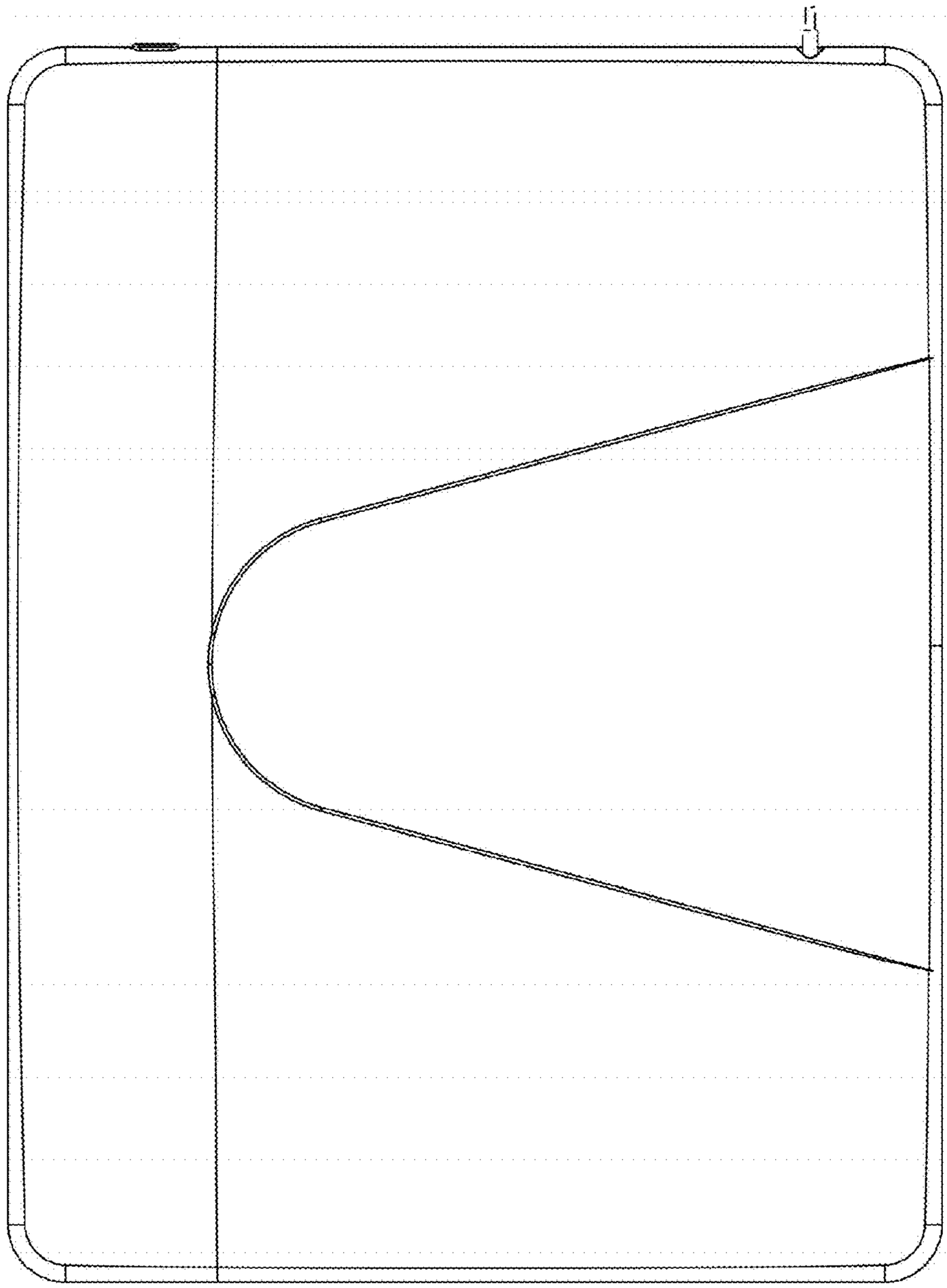

FIG. 7

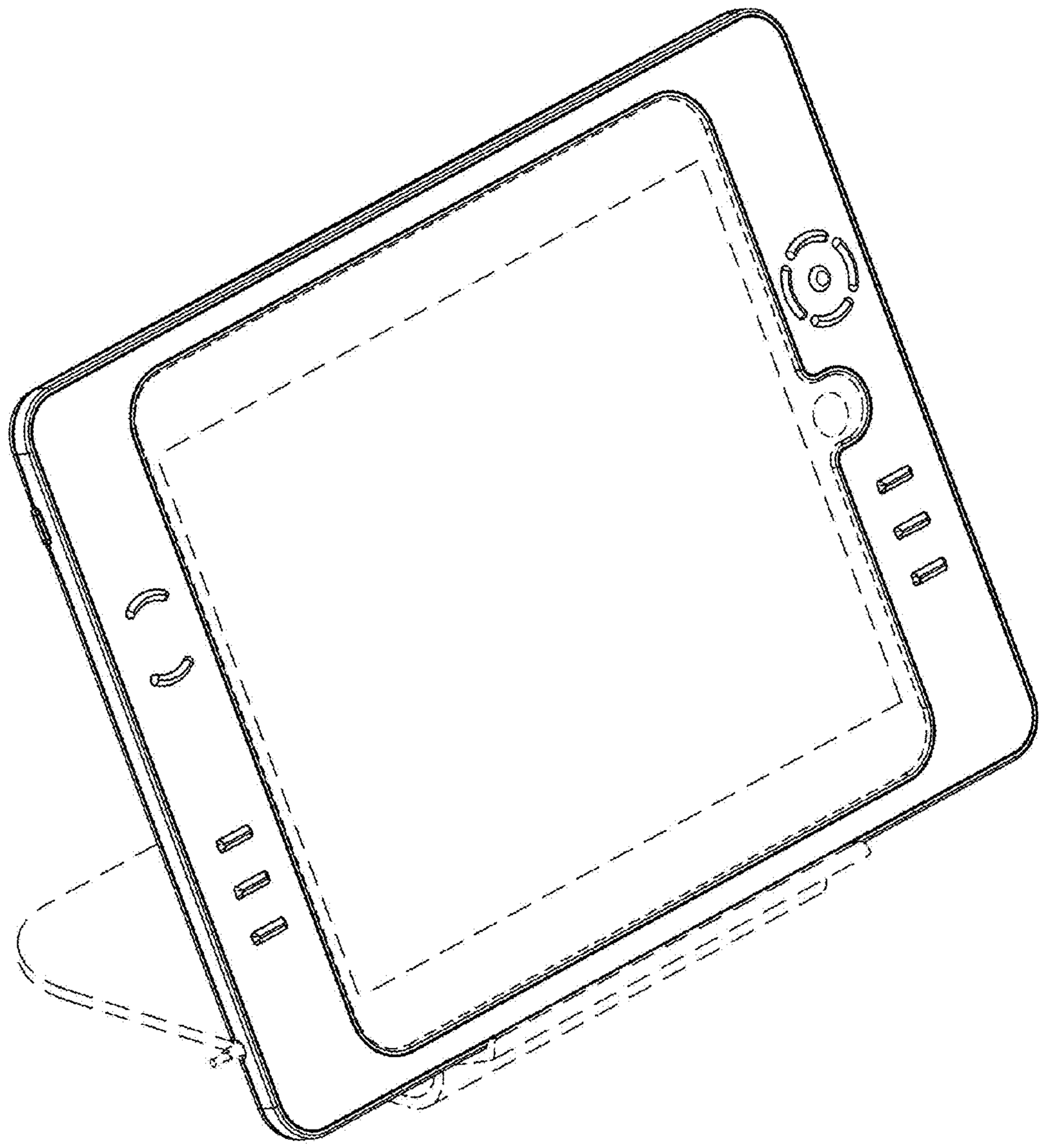

FIG. 8

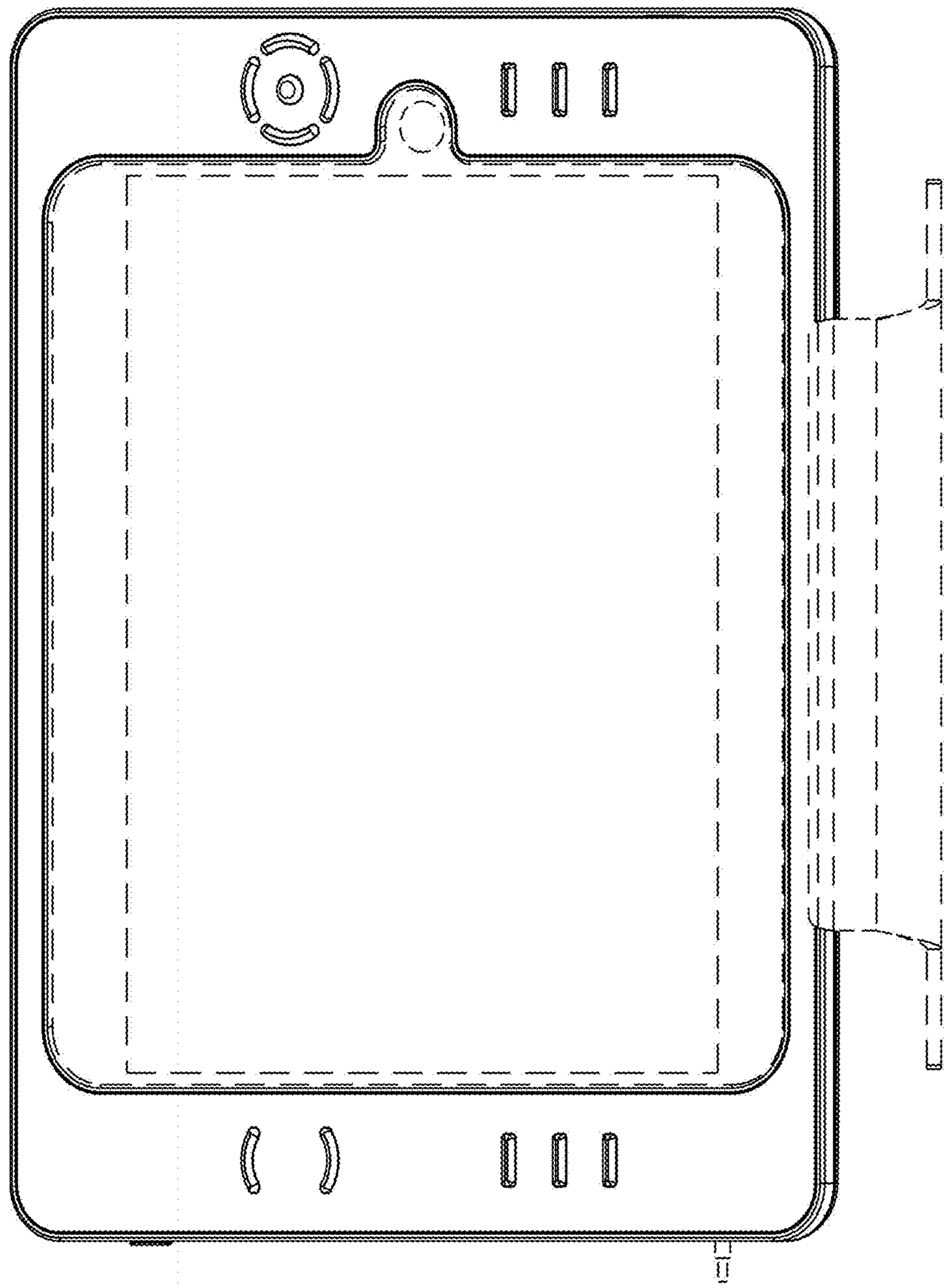

FIG. 9

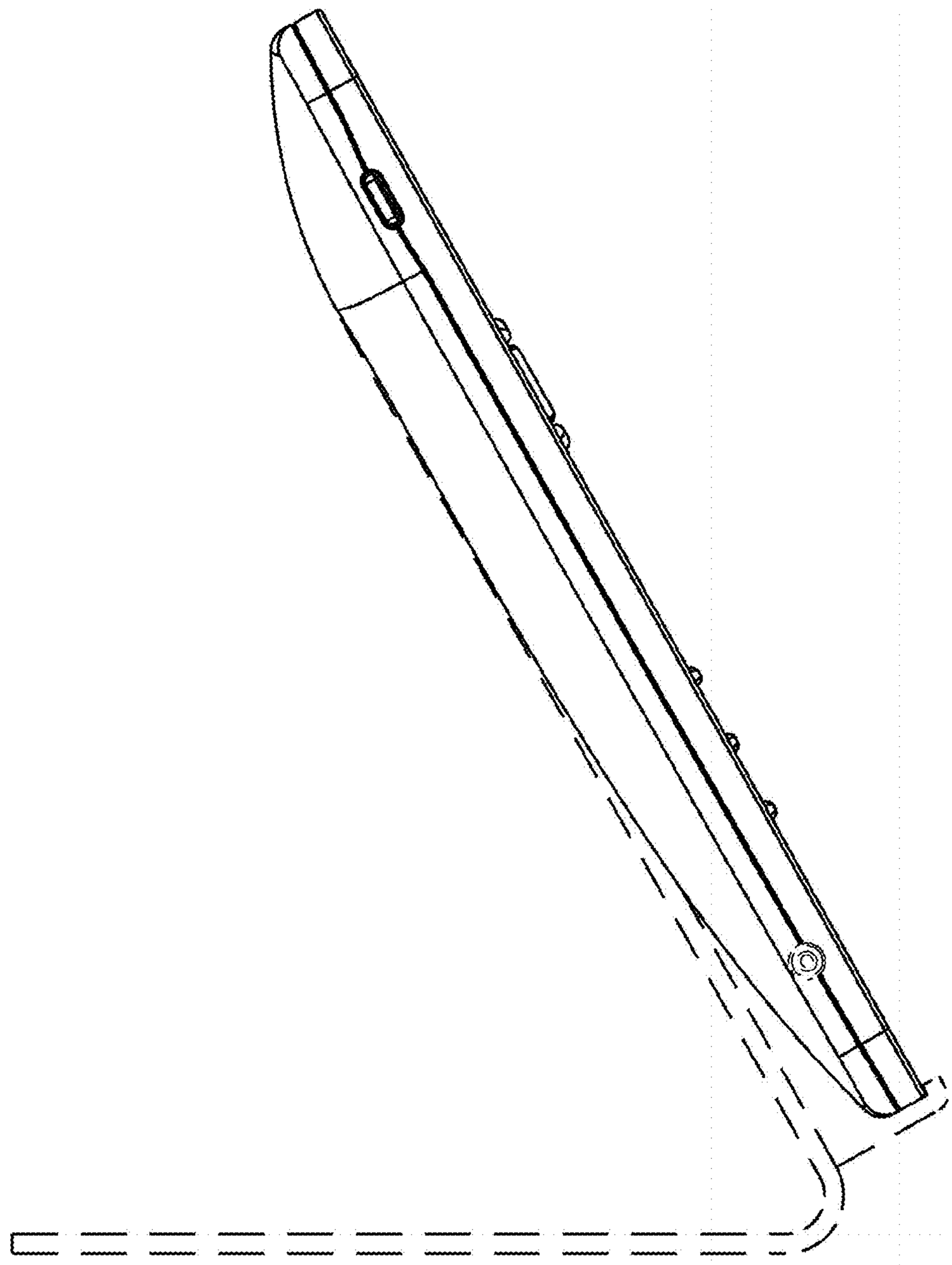

FIG. 10

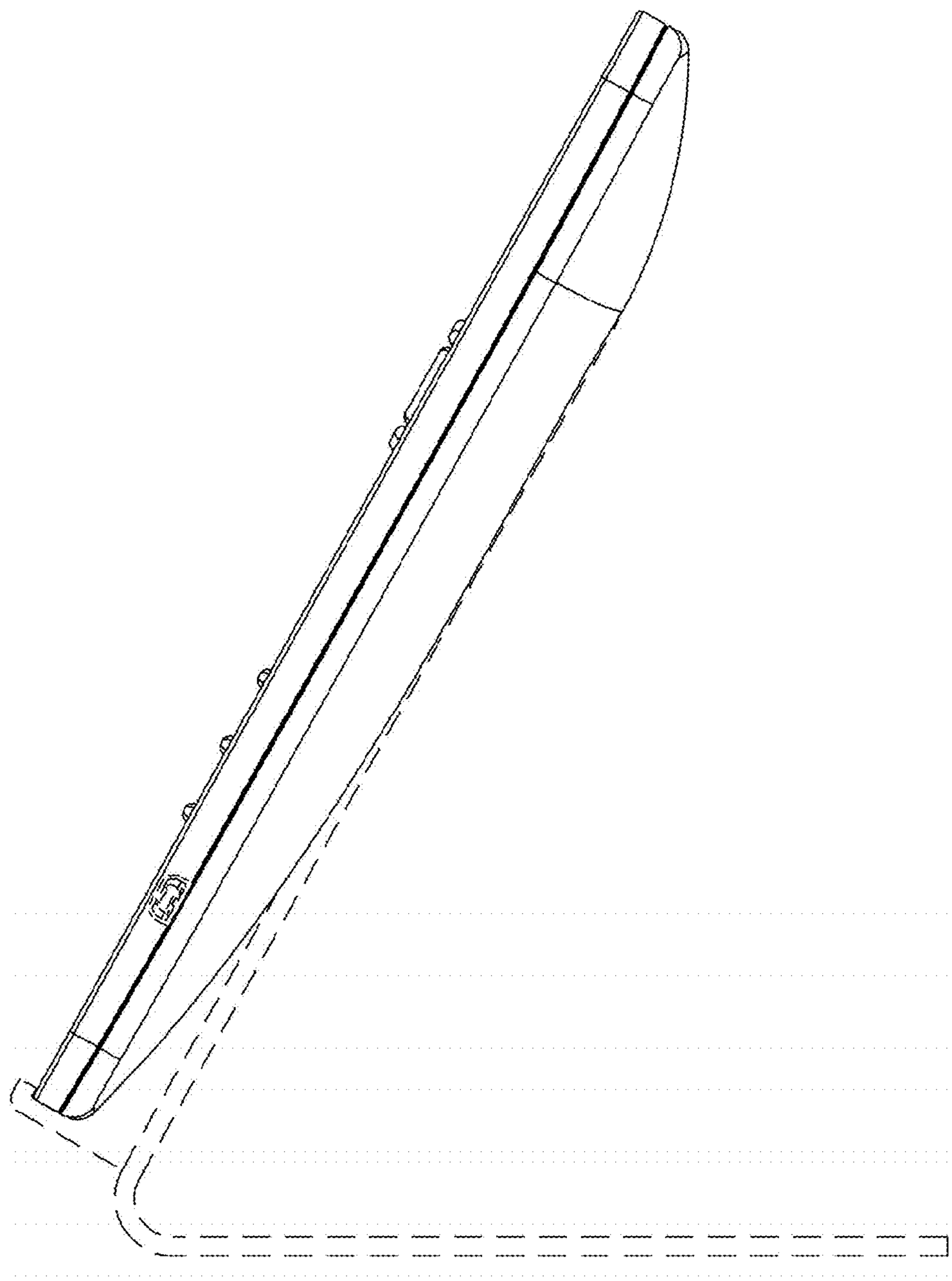

FIG. 11

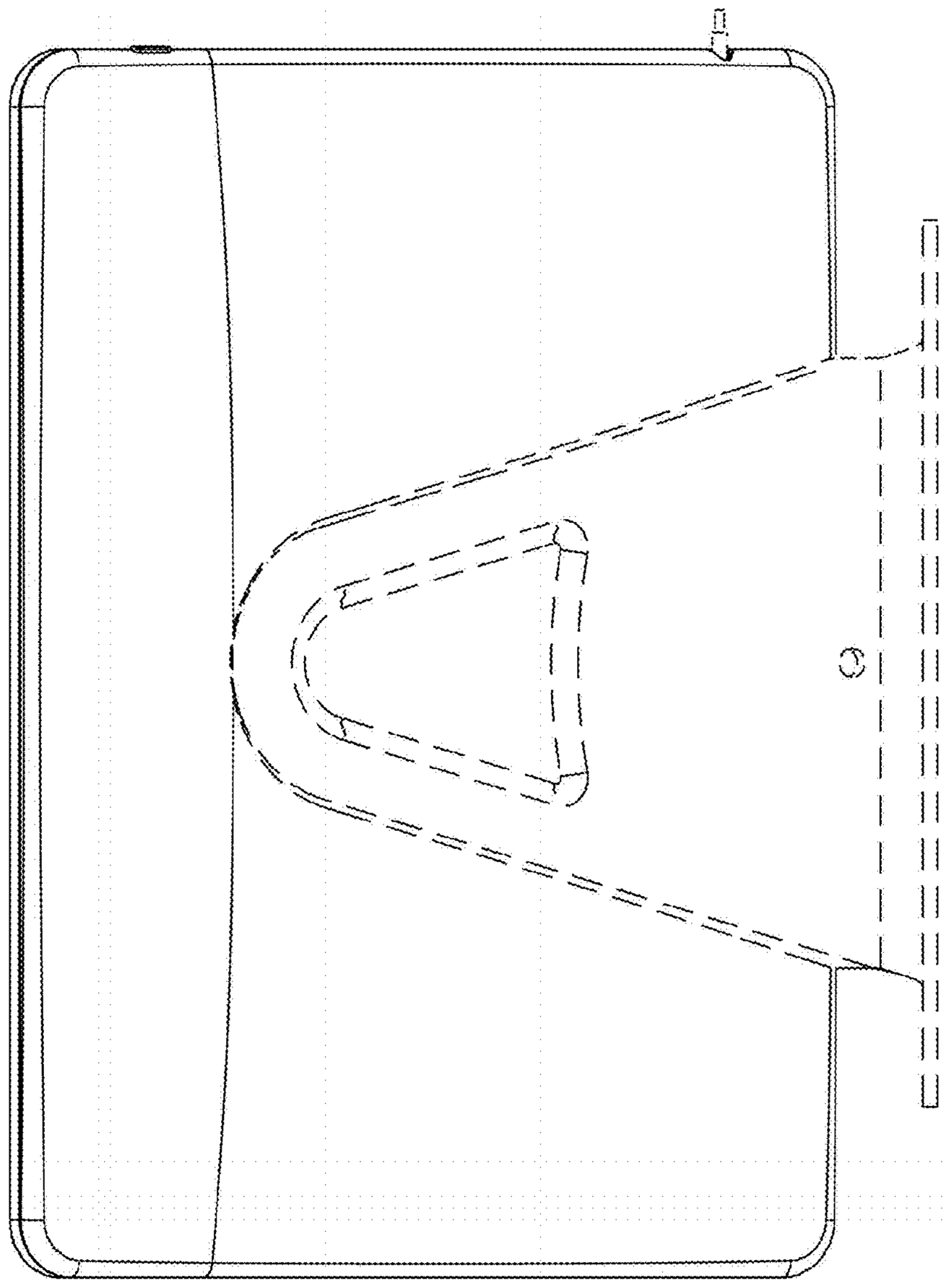

FIG. 12