US00D677664S

(12) United States Design Patent

Akana et al.

(10) Patent No.: US D677,664 S
(45) Date of Patent: ** Mar. 12, 2013

(54) **COMPONENT OF AN ELECTRONIC DEVICE**

(75) Inventors: **Jody Akana**, San Francisco, CA (US); **Bartley K. Andre**, Menlo Park, CA (US); **Jeremy Bataillou**, San Francisco, CA (US); **Daniel J. Coster**, San Francisco, CA (US); **Daniele De Iuliis**, San Francisco, CA (US); **Richard Hung Minh Dinh**, San Jose, CA (US); **Evans Hankey**, San Francisco, CA (US); **Richard P. Howarth**, San Francisco, CA (US); **Jonathan P. Ive**, San Francisco, CA (US); **Steve Jobs**, Palo Alto, CA (US); **Duncan Robert Kerr**, San Francisco, CA (US); **Nicholas George LeBreton Merz**, San Francisco, CA (US); **Scott A. Myers**, San Francisco, CA (US); **Shin Nishibori**, Portola Valley, CA (US); **David A. Pakula**, San Francisco, CA (US); **Matthew Dean Rohrbach**, San Francisco, CA (US); **Peter Russell-Clarke**, San Francisco, CA (US); **Christopher J. Stringer**, Woodside, CA (US); **Tang Yew Tan**, San Francisco, CA (US); **Trent Weber**, Saratoga, CA (US); **Eugene Antony Whang**, San Francisco, CA (US); **Michael Benjamin Wittenberg**, Sunnyvale, CA (US); **Rico Zorkendorfer**, San Francisco, CA (US)

(73) Assignee: **Apple Inc.**, Cupertino, CA (US)

(**) Term: **14 Years**

(21) Appl. No.: **29/376,052**

(22) Filed: **Sep. 30, 2010**

(51) **LOC (9) Cl.** **14-02**
(52) **U.S. Cl.** **D14/439**
(58) **Field of Classification Search** ..... D14/341–347, D14/424, 425, 432–453, 464, 468, 469, 471, D14/496, 511, 138 AA, 138 AD, 138 C, 138 G, D14/203.1–203.8, 217, 238.1, 248, 250, 257, D14/299; 361/679.01, 679.02, 679.03, 679.3, 361/679.55, 679.56; 455/550.1, 556.1, 556.2, 455/575.1, 575.3–575.5, 575.8, 90.3
See application file for complete search history.

(56) **References Cited**

U.S. PATENT DOCUMENTS

D270,061 S 8/1983 Ackeret
(Continued)

FOREIGN PATENT DOCUMENTS

EM 000910591-0001 3/2008
(Continued)

OTHER PUBLICATIONS

Co-pending U.S. Appl. No. 29/384,916, Akana et al., "Component of an Electronic Device," filed Feb. 4, 2011 (not published).

Primary Examiner — Deanna L Fluegeman
(74) *Attorney, Agent, or Firm* — Sterne, Kessler, Goldstein & Fox PLLC

(57) **CLAIM**

The ornamental design for a component of an electronic device, as shown and described.

DESCRIPTION

An example of the type of device that may incorporate the present invention is the electronic device disclosed in U.S. Appl. No. 29/360,036.

FIG. **1** is a bottom front perspective view of a component of an electronic device showing our new design;
FIG. **2** is a front view thereof;
FIG. **3** is a rear view thereof;
FIG. **4** is a top view thereof;
FIG. **5** is a bottom view thereof;
FIG. **6** is a left side view thereof; and,
FIG. **7** is a right side view thereof.

The shade lines in the Figures indicate contour and not surface ornamentation.

The broken lines in the Figures show portions of the component of an electronic device which form no part of the claimed design.

1 Claim, 5 Drawing Sheets

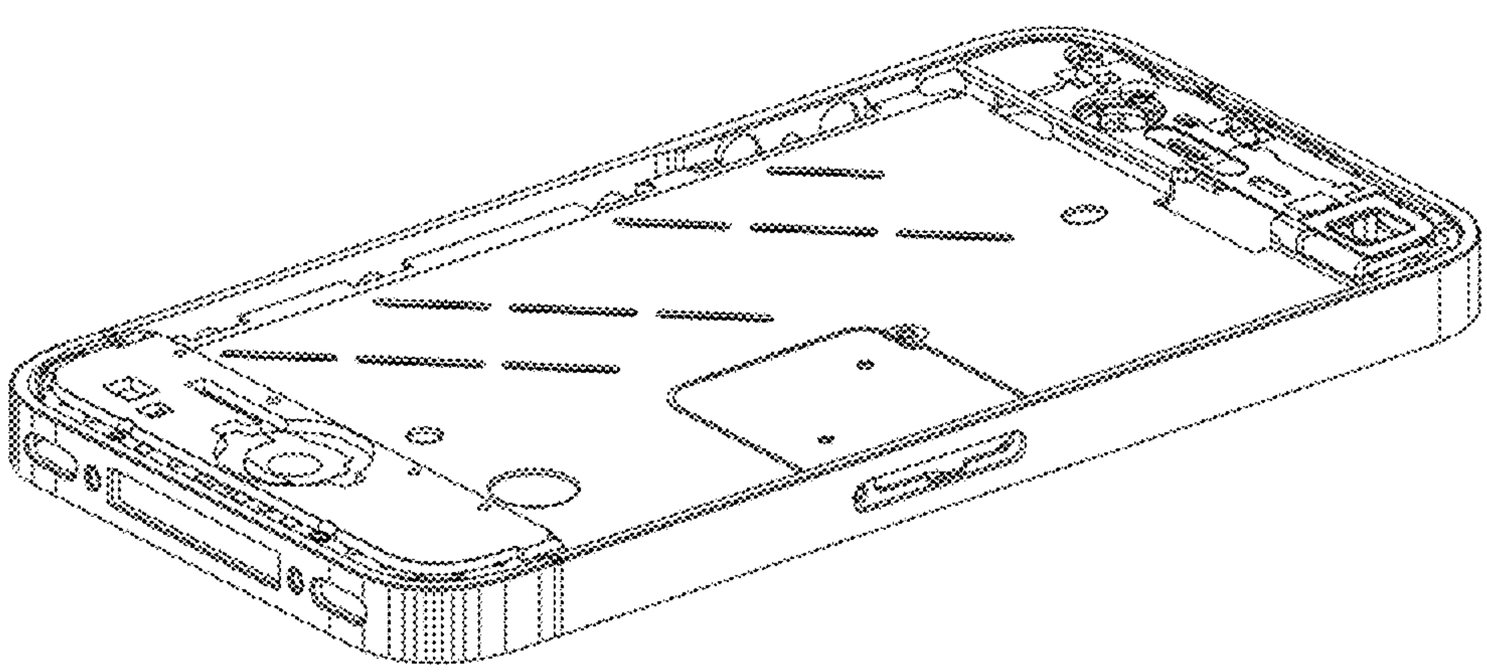

U.S. PATENT DOCUMENTS

D300,831	S		4/1989	Jenkins et al.	
D332,328	S		1/1993	Lombardi, Jr.	
D384,942	S	*	10/1997	Vinuela	D14/346
D410,440	S		6/1999	Carnell	
D420,354	S	*	2/2000	Morales	D14/191
D469,413	S		1/2003	To et al.	
D494,165	S	*	8/2004	Yokota	D14/341
D513,617	S		1/2006	Tierney	
D515,541	S		2/2006	Jensfelt	
D535,281	S		1/2007	Yang	
D539,815	S		4/2007	Lai et al.	
D558,460	S		1/2008	Yu et al.	
D558,726	S		1/2008	Wang et al.	
D560,227	S	*	1/2008	Bennett et al.	D14/496
D562,285	S		2/2008	Lim	
D567,819	S		4/2008	Devericks et al.	
D569,629	S		5/2008	Yu et al.	
D569,837	S		5/2008	Baik et al.	
D583,346	S		12/2008	Jung et al.	
D583,796	S		12/2008	Tanaka	
D584,272	S		1/2009	Chung et al.	
D584,738	S		1/2009	Kim et al.	
7,554,812	B2	*	6/2009	Lynch et al.	361/736
D598,887	S		8/2009	Xiao et al.	
D601,530	S		10/2009	Park et al.	
D603,834	S		11/2009	Lyman et al.	
D606,988	S	*	12/2009	Andre et al.	D14/315
D610,123	S	*	2/2010	Youn et al.	D14/138 AA
7,660,560	B2	*	2/2010	Zuo et al.	455/90.3
D618,194	S	*	6/2010	Kim et al.	D14/138 AA
D623,161	S	*	9/2010	Kwon et al.	D14/138 AA
D626,437	S	*	11/2010	Lee et al.	D10/65
D627,777	S	*	11/2010	Akana et al.	D14/341
D627,778	S	*	11/2010	Akana et al.	D14/341
D629,787	S	*	12/2010	Lee	D14/203.7
D629,788	S	*	12/2010	Lee	D14/203.7
D630,181	S	*	1/2011	Xiao	D14/138 AA
D631,051	S	*	1/2011	DeFronzo	D14/434
D631,454	S	*	1/2011	Cui	D14/138 AA
7,876,274	B2	*	1/2011	Hobson et al.	343/702
D633,493	S		3/2011	Akana et al.	
7,911,774	B2	*	3/2011	Nakanishi et al.	361/679.21
D636,392	S	*	4/2011	Akana et al.	D14/341
D636,770	S	*	4/2011	Li	D14/341
7,933,123	B2	*	4/2011	Wang et al.	361/679.56
D637,596	S	*	5/2011	Akana et al.	D14/341
D637,988	S	*	5/2011	Jinkinson	D14/138 AA
D638,835	S	*	5/2011	Akana et al.	D14/341
D641,017	S	*	7/2011	Meng	D14/341
D647,519	S	*	10/2011	Rothbaum et al.	D14/250
D652,015	S	*	1/2012	Han	D14/138 AA
8,090,408	B2	*	1/2012	Ochi et al.	455/558
D653,645	S	*	2/2012	Park	D14/138 G
D654,497	S	*	2/2012	Lee	D14/341
D655,701	S	*	3/2012	Bruette	D14/250
D656,134	S	*	3/2012	Melville et al.	D14/250
D659,132	S	*	5/2012	Wen	D14/250
D671,109	S	*	11/2012	Rothbaum et al.	D14/250
D671,930	S	*	12/2012	Akana et al.	D14/250
2006/0094464	A1		5/2006	Kyou et al.	
2006/0281501	A1	*	12/2006	Zuo et al.	455/575.1
2009/0067141	A1	*	3/2009	Dabov et al.	361/753
2009/0219259	A1	*	9/2009	Kwon	345/173
2009/0247244	A1		10/2009	Mittleman et al.	
2009/0256759	A1	*	10/2009	Hill et al.	343/702
2009/0315690	A1		12/2009	Hwang et al.	
2010/0061055	A1	*	3/2010	Dabov et al.	361/679.56
2011/0050560	A1	*	3/2011	Foster et al.	345/107
2011/0151945	A1	*	6/2011	Jiang et al.	455/575.1
2011/0186325	A1	*	8/2011	Myers et al.	174/50
2011/0188179	A1	*	8/2011	Myers et al.	361/679.01
2011/0255218	A1	*	10/2011	Pakula et al.	361/679.01
2011/0255252	A1	*	10/2011	Sloey et al.	361/752
2011/0310029	A1	*	12/2011	Uttermann et al.	345/173
2012/0008266	A1	*	1/2012	Nomura	361/679.01
2012/0009974	A1	*	1/2012	Sunderland	455/550.1
2012/0044123	A1	*	2/2012	Rothkopf et al.	343/878
2012/0044637	A1	*	2/2012	Rothkopf et al.	361/679.55
2012/0048589	A1	*	3/2012	Jol	174/59
2012/0073115	A1	*	3/2012	Filson et al.	29/592.1
2012/0099253	A1	*	4/2012	Tang et al.	361/679.01

FOREIGN PATENT DOCUMENTS

EM	000938071-0001	5/2008
EM	000939731-0001	6/2008
EM	000569157-0005	9/2008
EM	001183461-0002	12/2009
JP	132490	12/2009
KR	30-0418547	7/2006
KR	30-0550428	1/2010
KR	30-0553546	2/2010

* cited by examiner

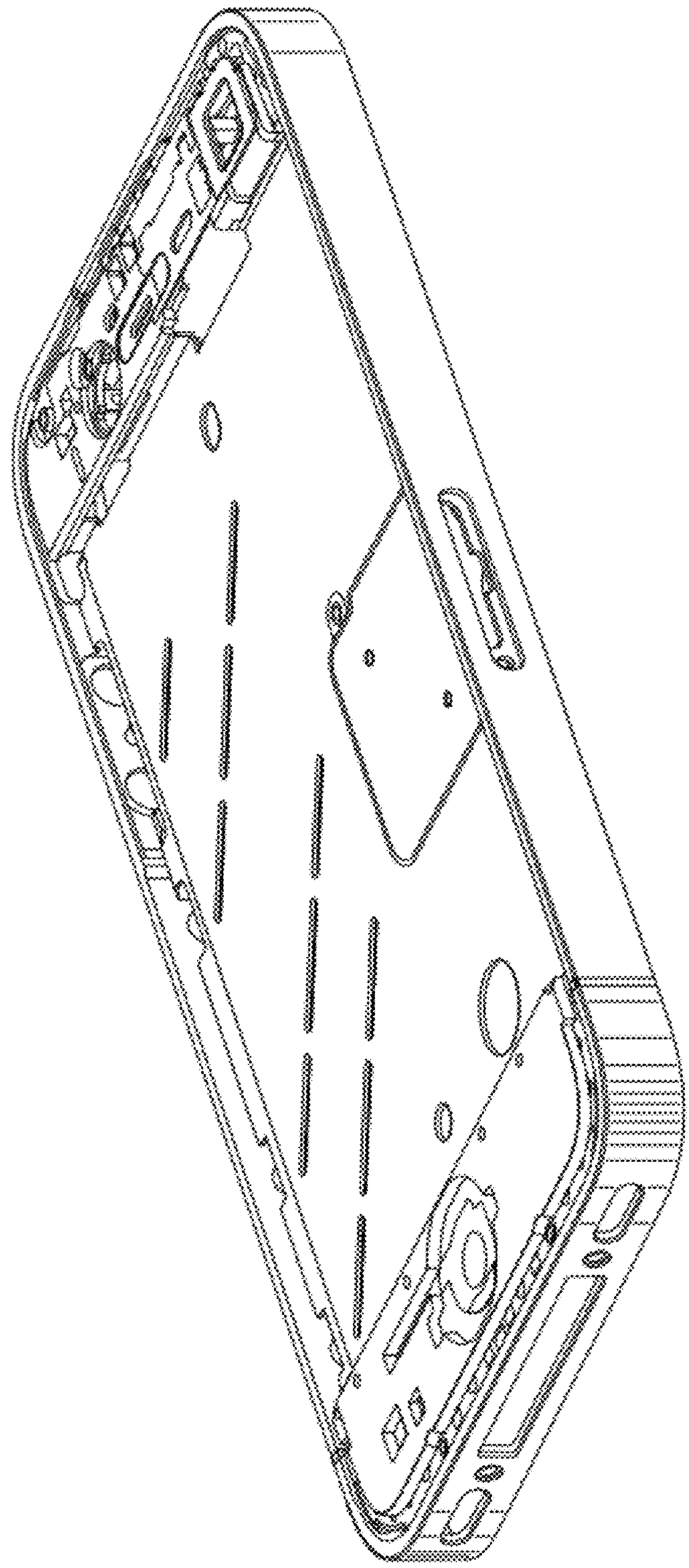

FIG. 1

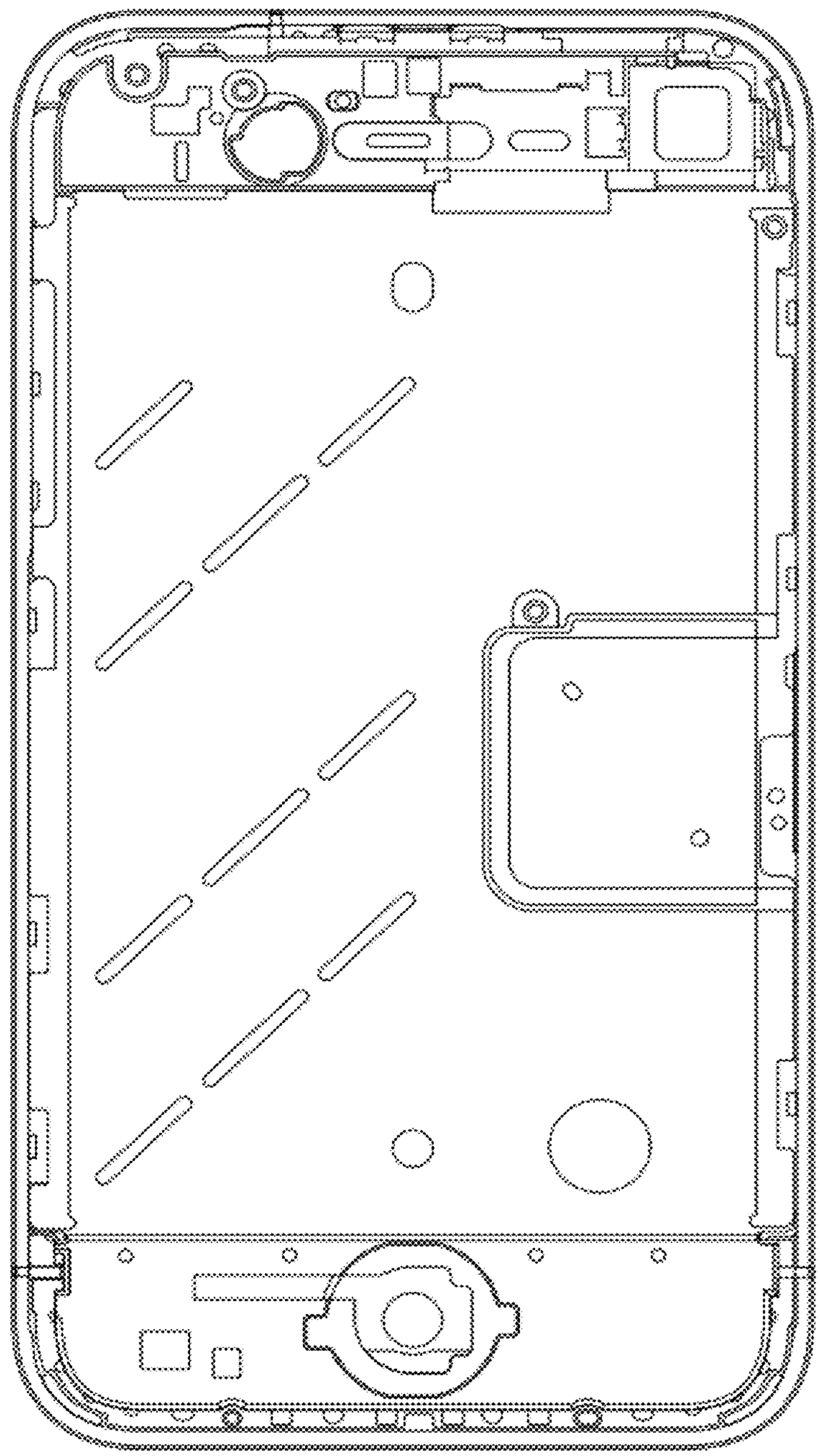

FIG. 2

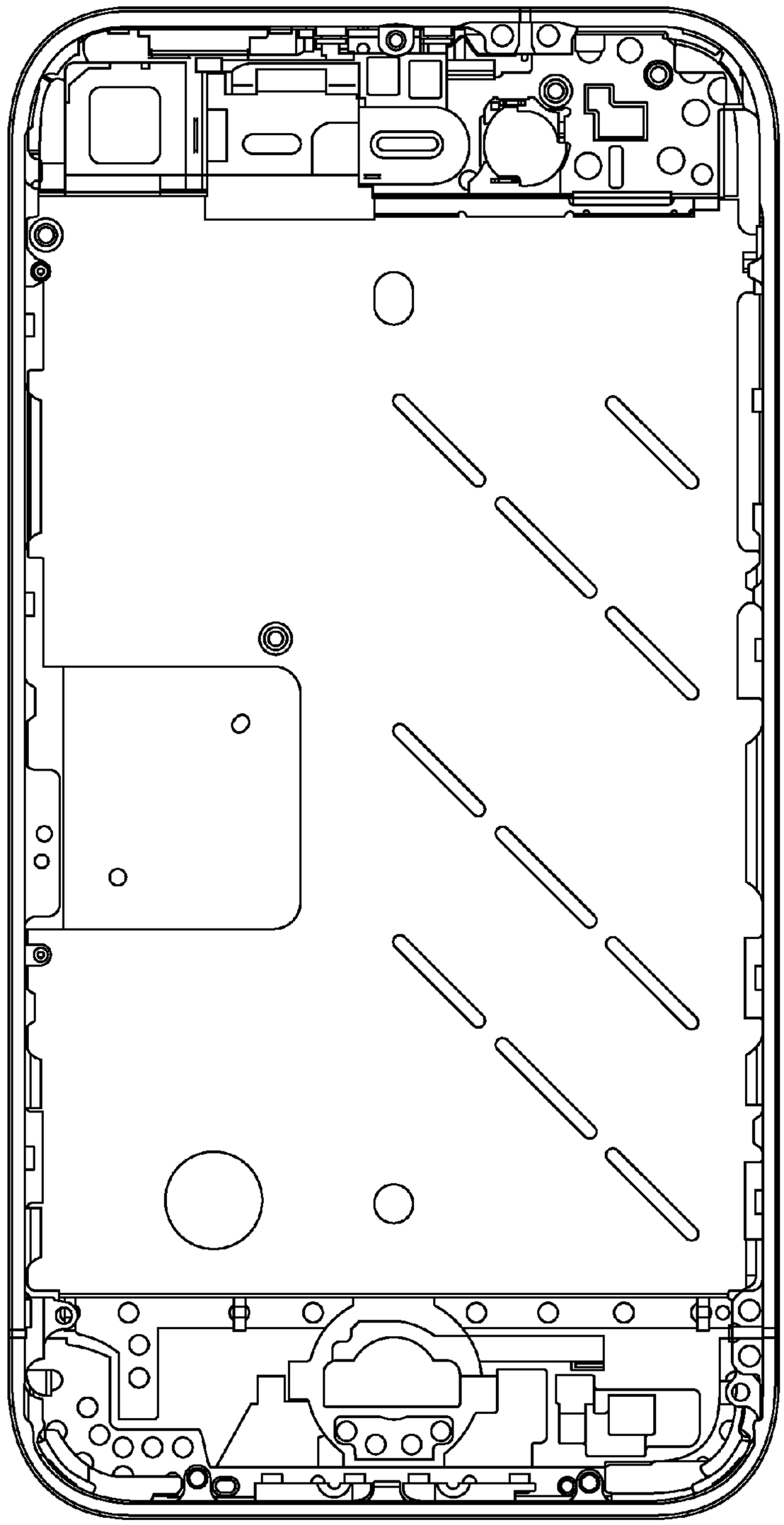

FIG. 3

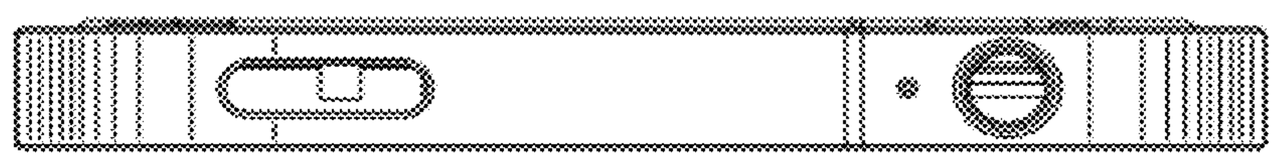

FIG. 4

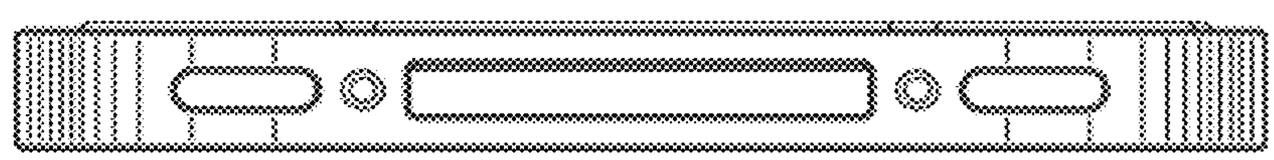

FIG. 5

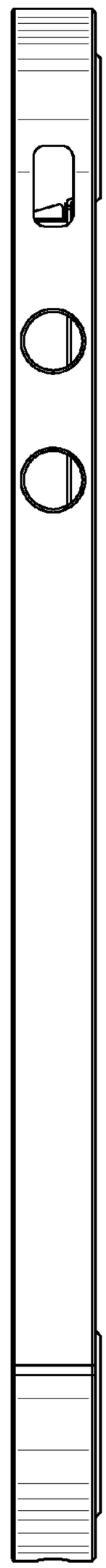

FIG. 6

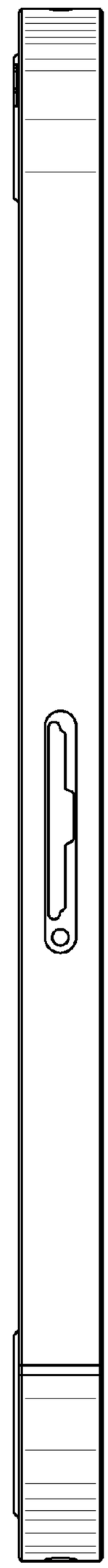

FIG. 7