US00D677397S

(12) United States Design Patent

Belfance et al.

(10) Patent No.: US D677,397 S
(45) Date of Patent: ** Mar. 5, 2013

(54) **VIAL**

(75) Inventors: **John Belfance**, Phenix City, AL (US); **Ronald Supranowicz**, Lenox, MA (US)

(73) Assignee: **CSP Technologies, Inc.**, Auburn, AL (US)

(**) Term: **14 Years**

(21) Appl. No.: **29/397,850**

(22) Filed: **Jul. 21, 2011**

Related U.S. Application Data

(63) Continuation of application No. 29/380,884, filed on Dec. 13, 2010, now Pat. No. Des. 644,739.

(51) **LOC (9) Cl.** **24-01**

(52) **U.S. Cl.** **D24/224**

(58) **Field of Classification Search** D24/216–232, D24/110, 115; D10/81; 422/500, 547, 549, 422/556, 557, 558; 435/287.1, 288.1; D3/201, D3/203.1, 203.2; D9/435, 445, 446, 449, D9/454, 503, 504, 529; 215/235–237
See application file for complete search history.

(56) **References Cited**

U.S. PATENT DOCUMENTS

6,221,655	B1 *	4/2001	Fung et al.	435/288.1
D491,275	S *	6/2004	Walters et al.	D24/224
6,769,558	B1 *	8/2004	Bucholtz	215/237
D555,490	S *	11/2007	Liu	D9/549
7,472,797	B2 *	1/2009	Ostrowski	215/306
D606,399	S *	12/2009	Scuturio	D9/449
D613,495	S *	4/2010	Foreman	D3/203.2
D621,951	S *	8/2010	Bucholtz et al.	D24/224
7,915,032	B2 *	3/2011	Ostrowski et al.	435/287.7
2003/0150191	A1 *	8/2003	Odet	53/285
2008/0081000	A1 *	4/2008	MacLeod et al.	422/68.1
2008/0116163	A1 *	5/2008	Sawyer	215/225
2009/0095699	A1 *	4/2009	Milante	215/217

* cited by examiner

Primary Examiner — Anhdao Doan
(74) *Attorney, Agent, or Firm* — Alissa L. Saenz

(57) **CLAIM**

The ornamental design for a vial, as shown and described.

DESCRIPTION

FIG. **1** is a perspective view of a first embodiment of the vial, in a closed state;
FIG. **2** is a perspective view of the vial of FIG. **1**, in an opened state;
FIG. **3** is a top plan view of the vial of FIG. **1**, in an opened state;
FIG. **4** is a bottom plan view of the vial of FIG. **1**, in an opened state;
FIG. **5** is a right side elevation of the vial of FIG. **1**, in an opened state;
FIG. **6** is a front elevation of the vial of FIG. **1**, in an opened state:
FIG. **7** is a left side elevation of the vial of FIG. **1**, in an opened state;
FIG. **8** is a rear elevation of the vial of FIG. **1**, in an opened state;
FIG. **9** is a perspective view of a second embodiment of the vial, in an opened state;
FIG. **10** is a top plan view of the vial of FIG. **9**, in an opened state;
FIG. **11** is a bottom plan view of the vial of FIG. **9**, in an opened state;
FIG. **12** is a right side elevation of the vial of FIG. **9**, in an opened state;
FIG. **13** is a front elevation of the vial of FIG. **9**, in an opened state;
FIG. **14** is a left side elevation of the vial of FIG. **9**, in an opened state; and,
FIG. **15** is a rear elevation of the vial of FIG. **9**, in an opened state.
The broken lines in the drawing views are included for the purpose of illustrating portions of the vial that form no part of the claimed design.

1 Claim, 9 Drawing Sheets

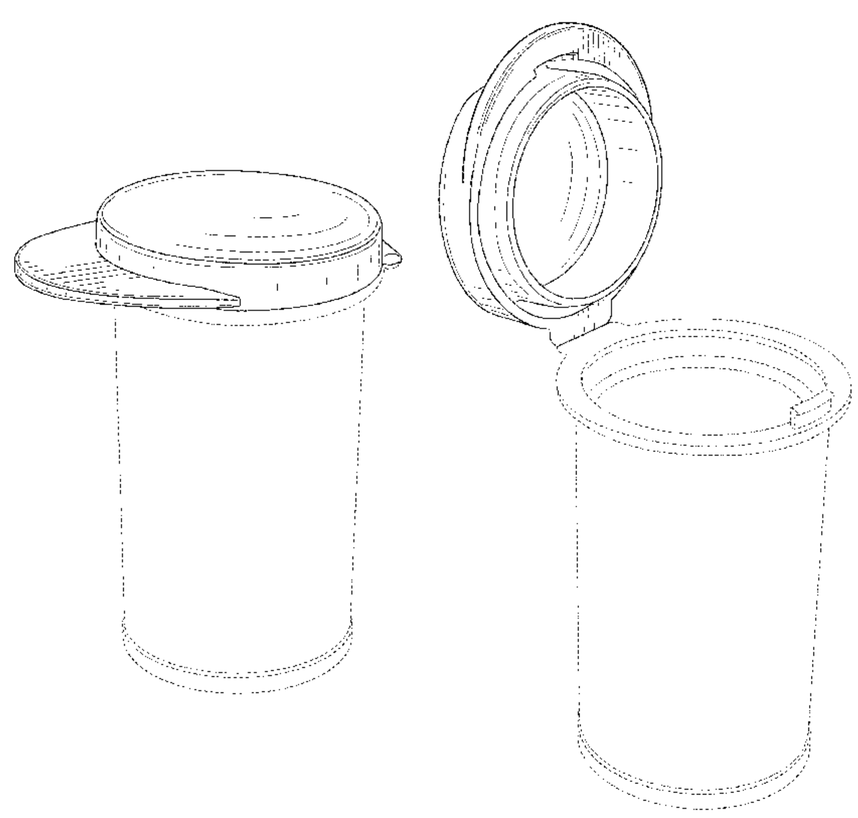

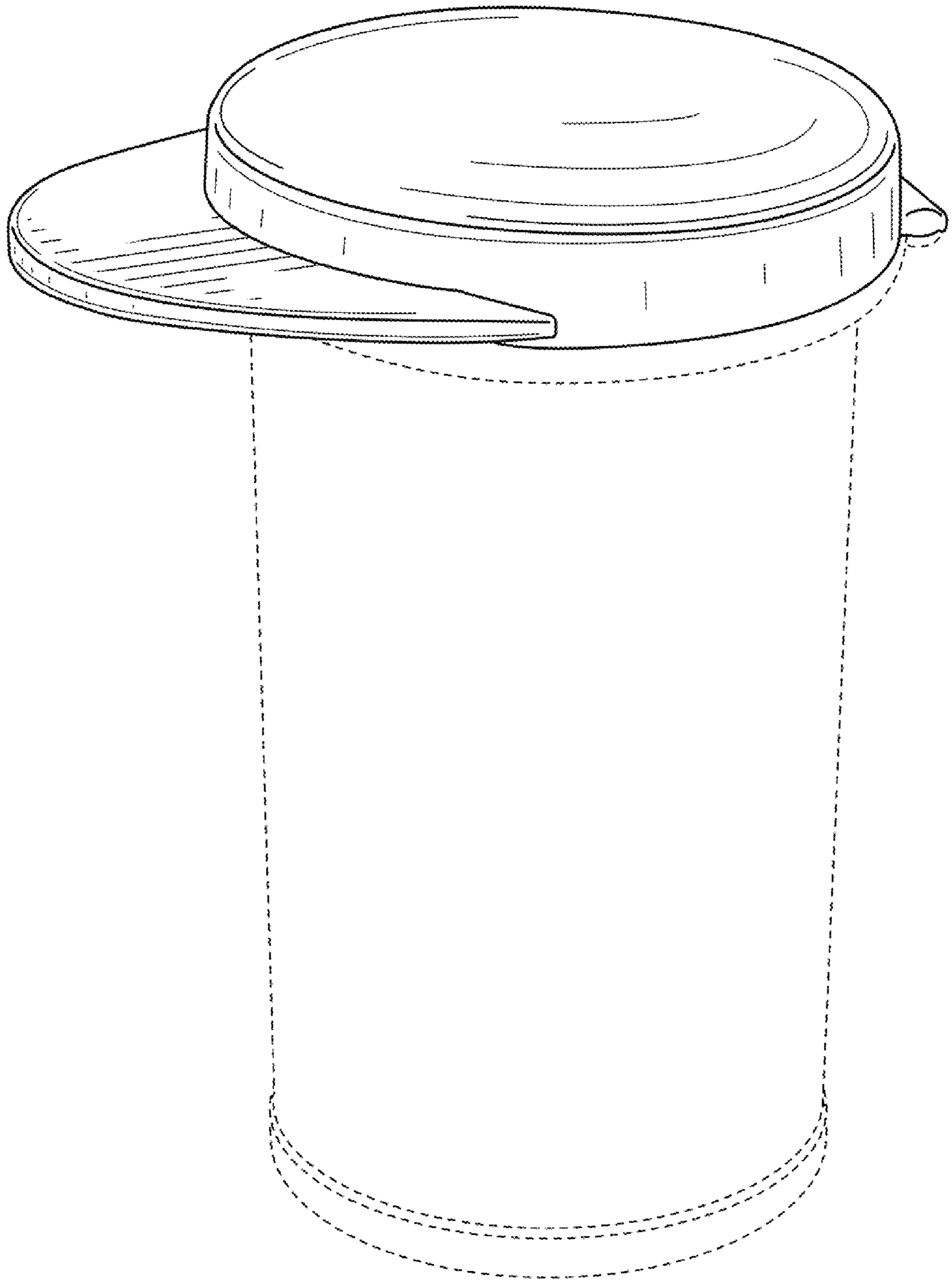

FIG. 1

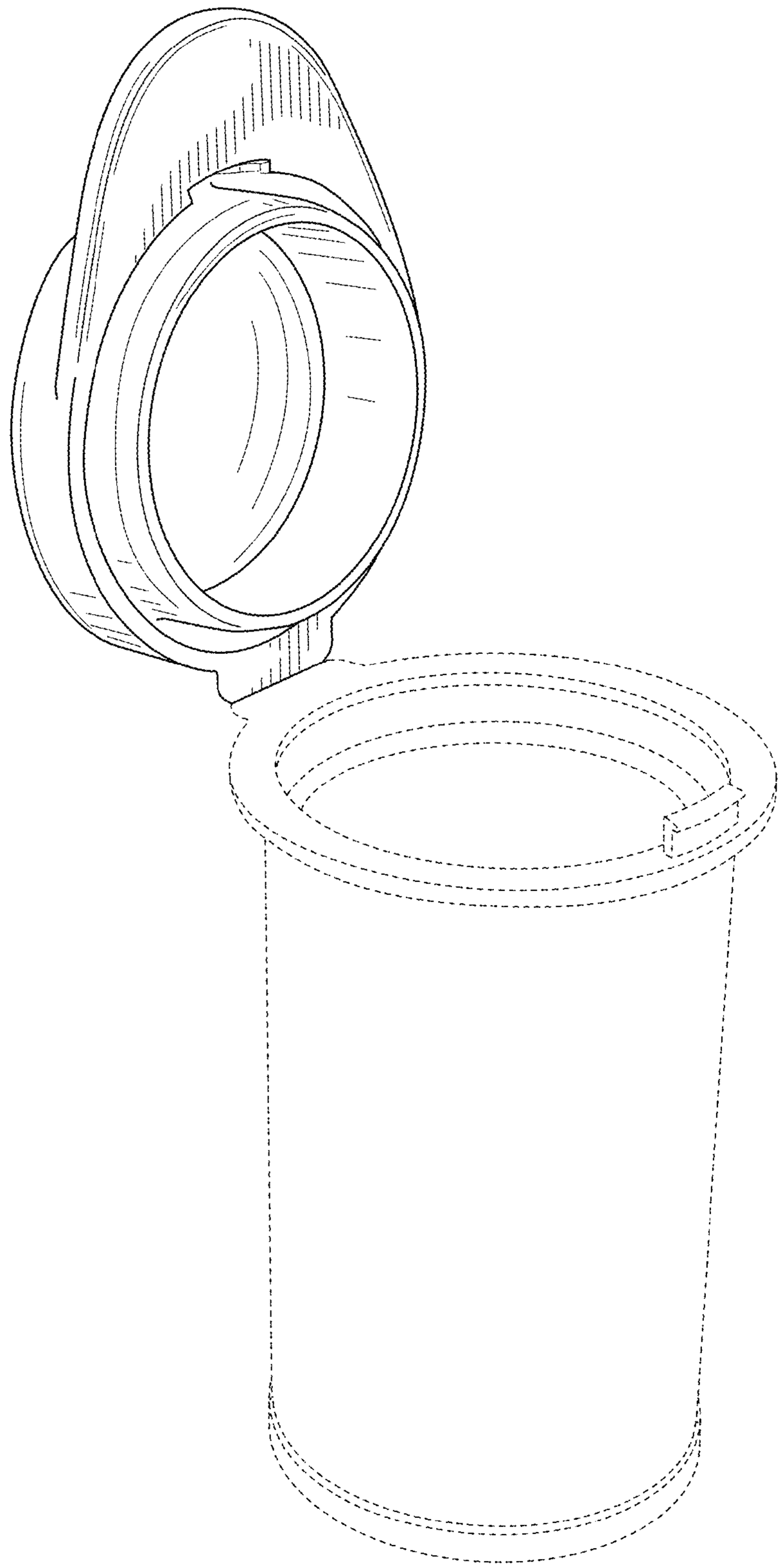

FIG. 2

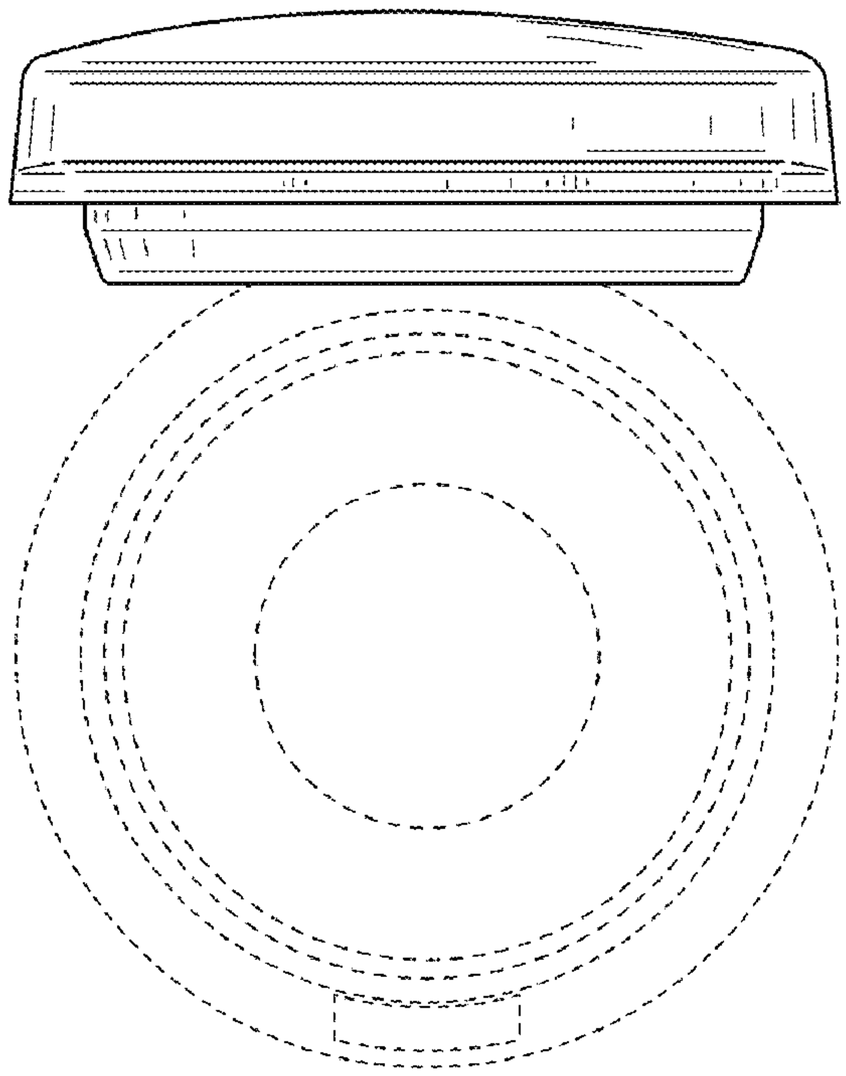

FIG. 3

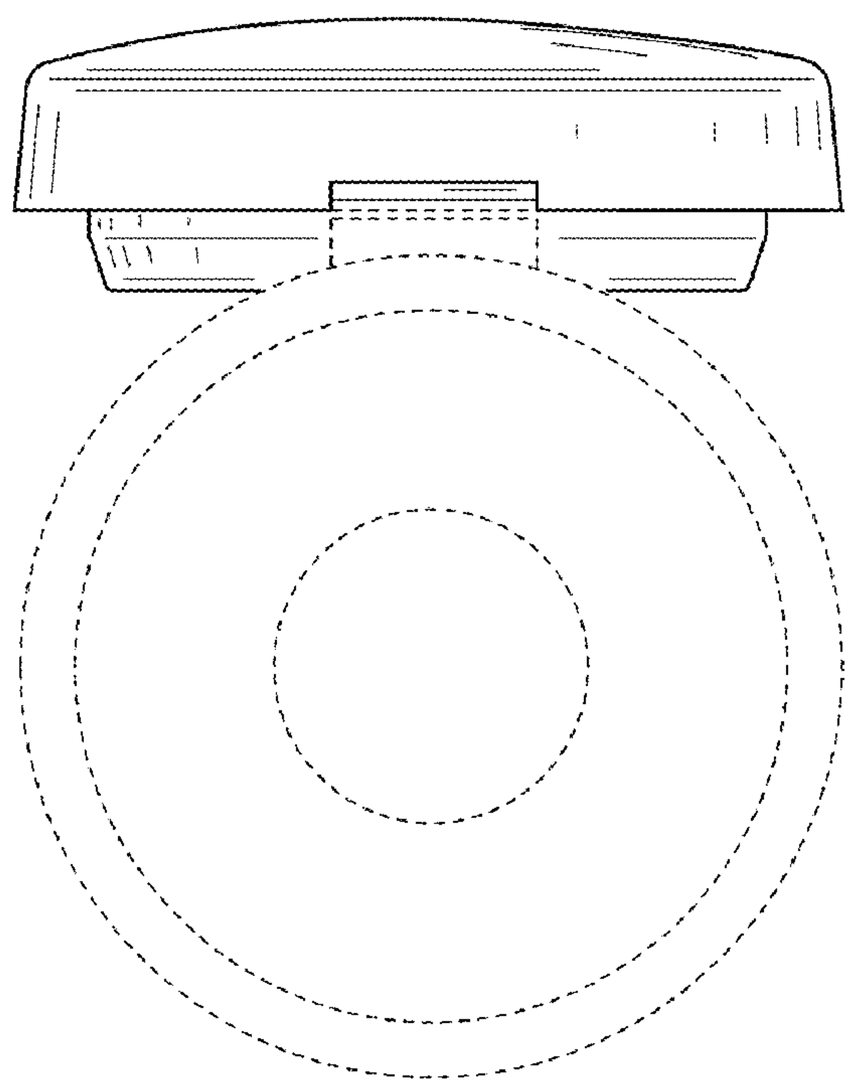

FIG. 4

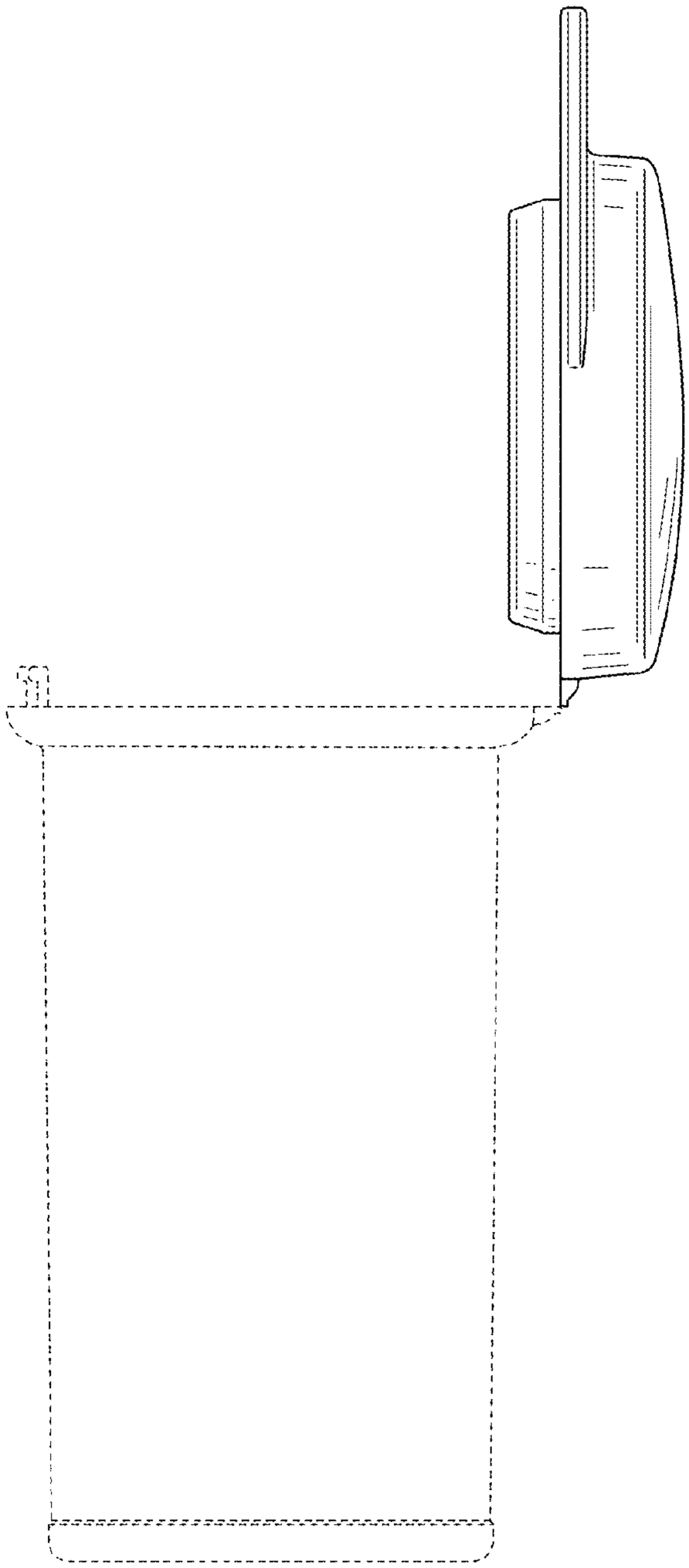

FIG. 5

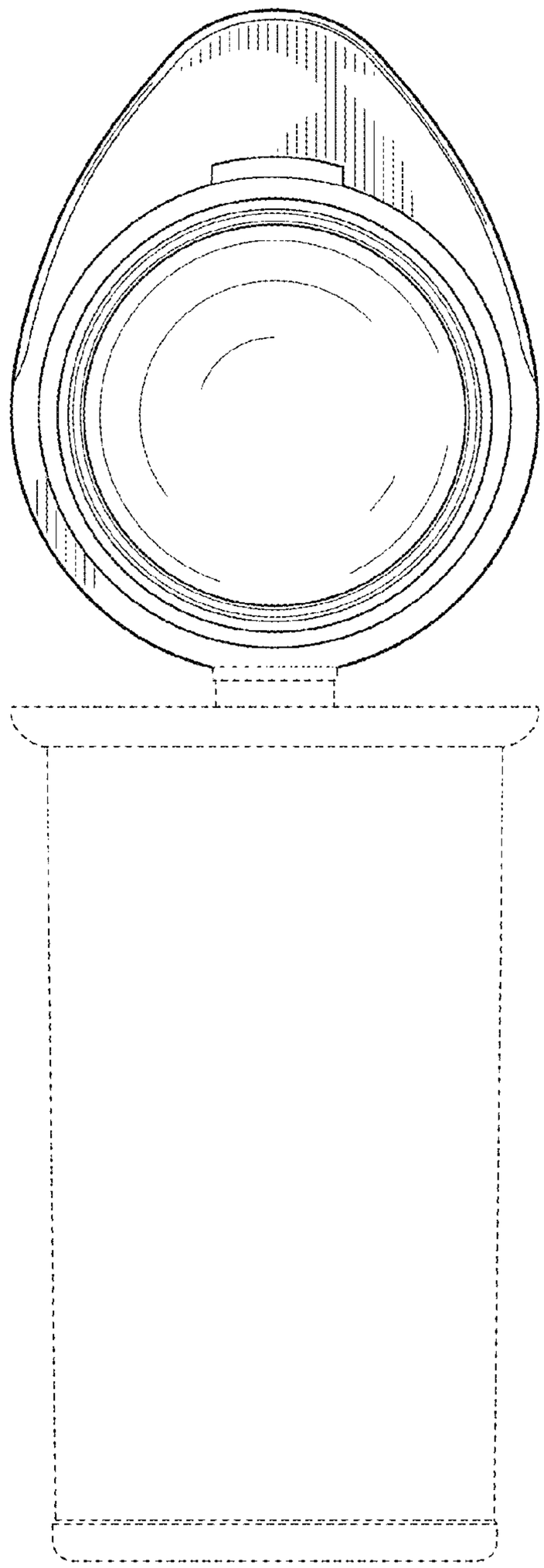

FIG. 6

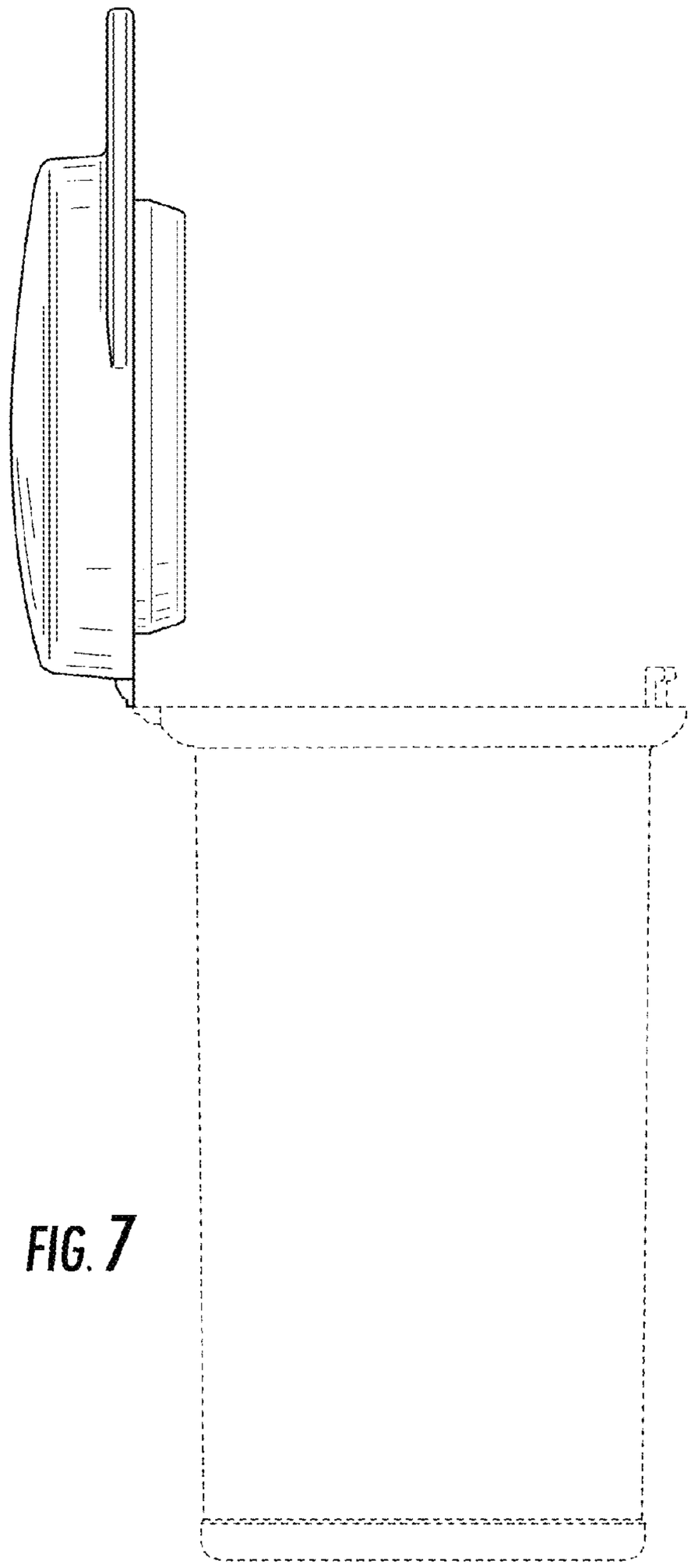

FIG. 7

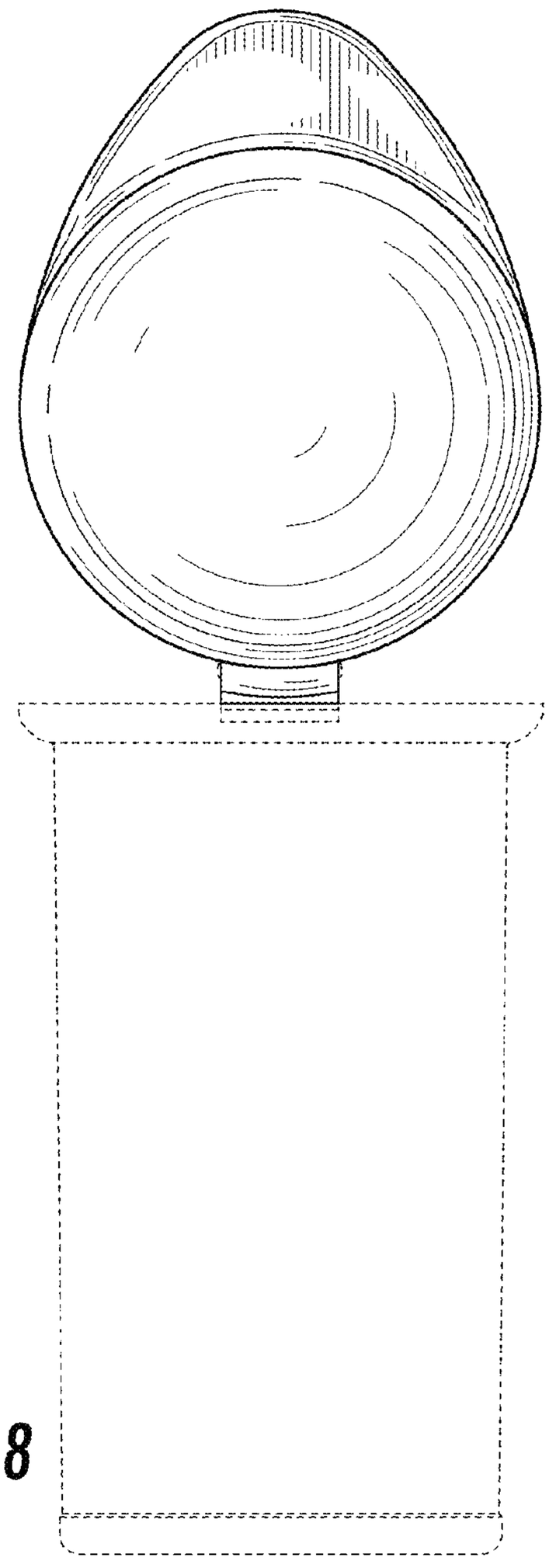

FIG. 8

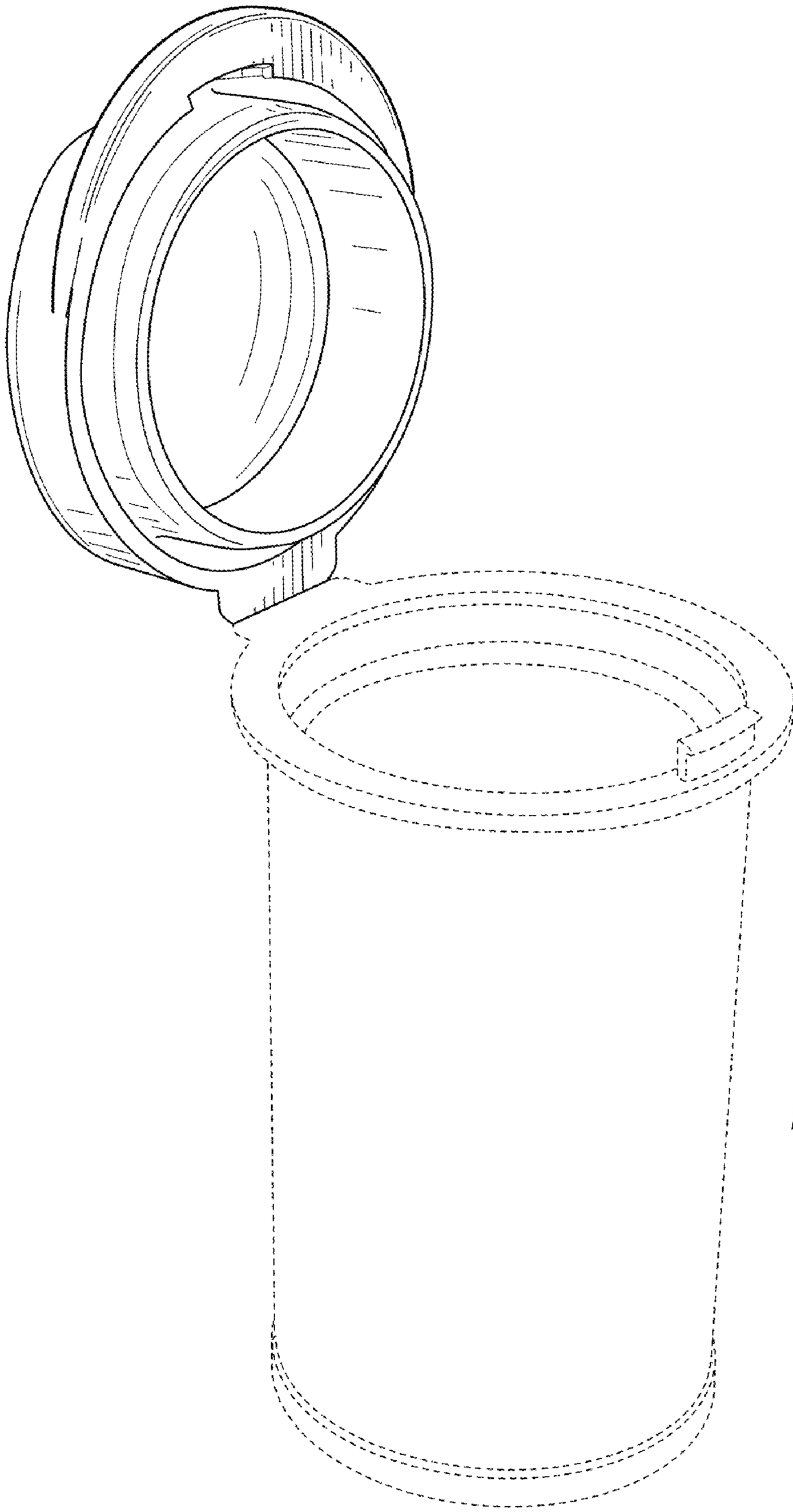

FIG. 9

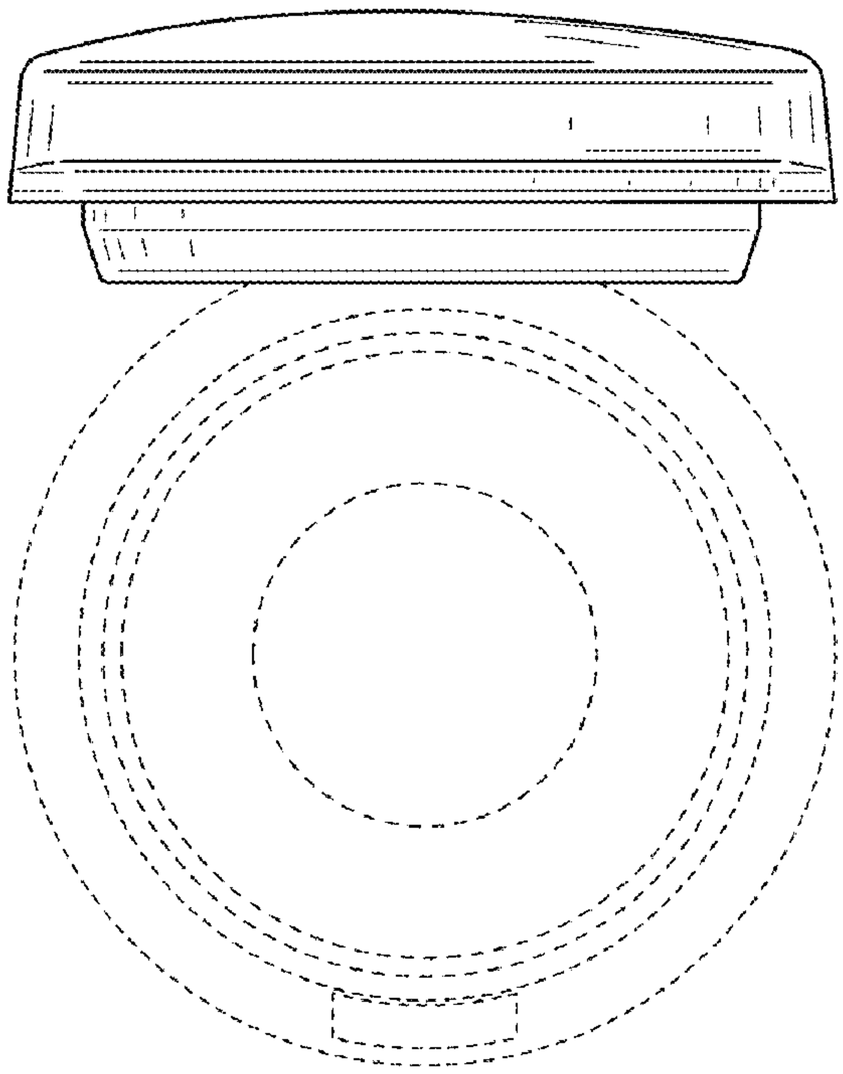

FIG. 10

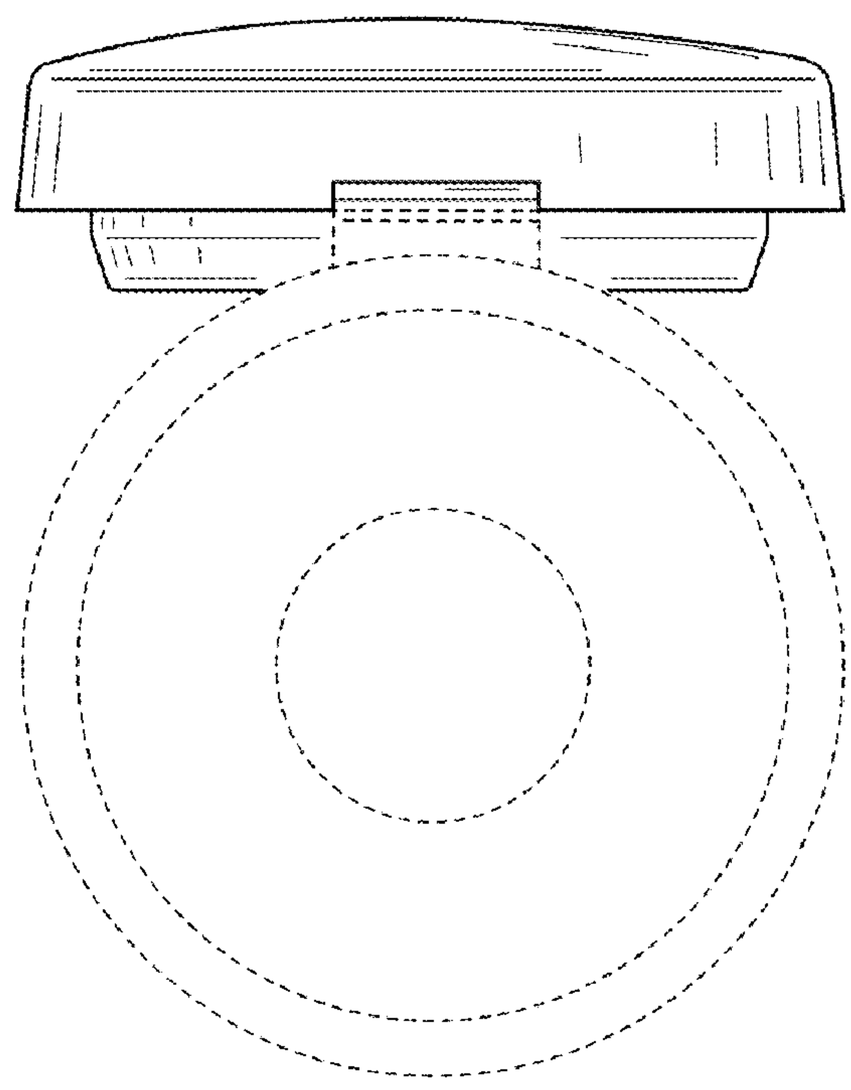

FIG. 11

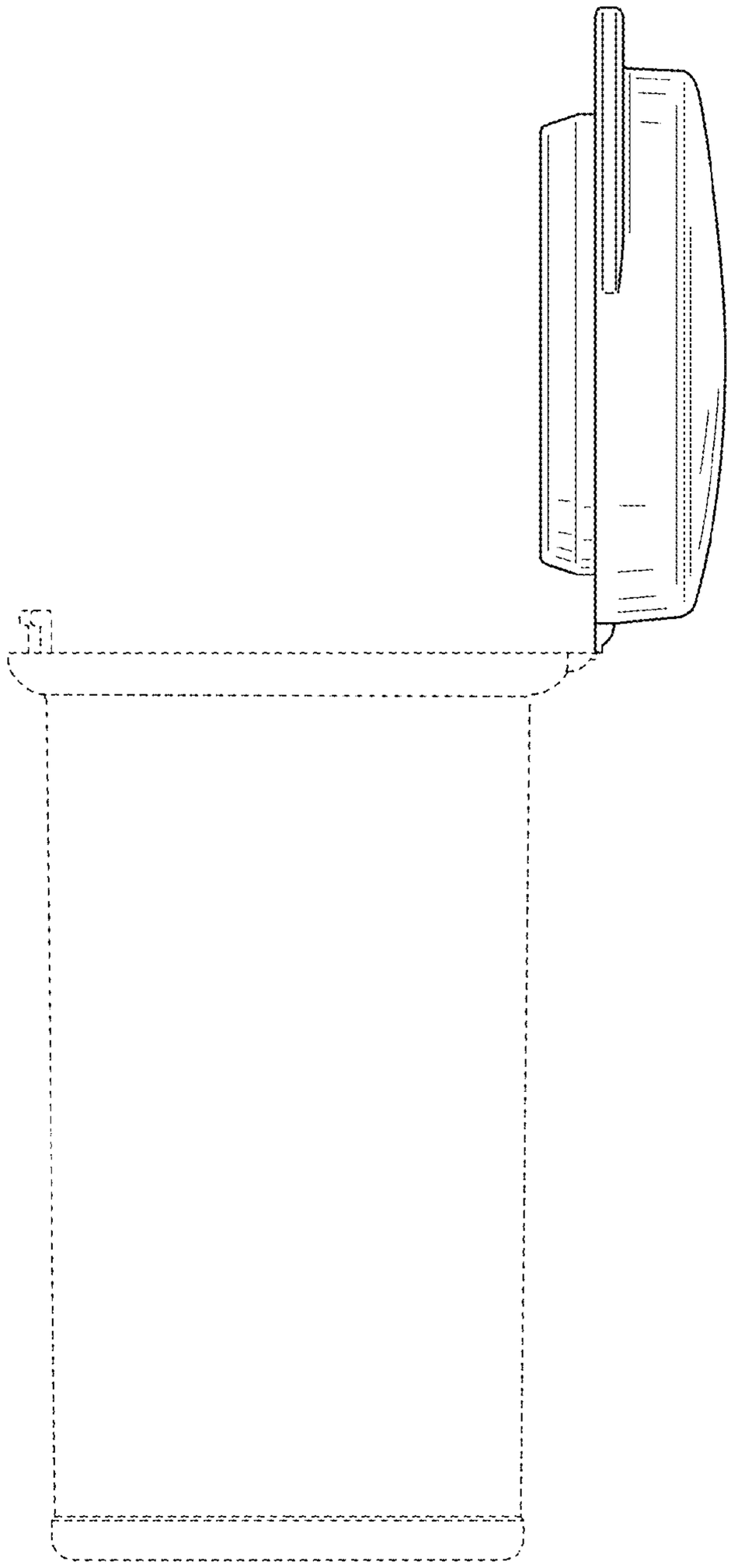

FIG. 12

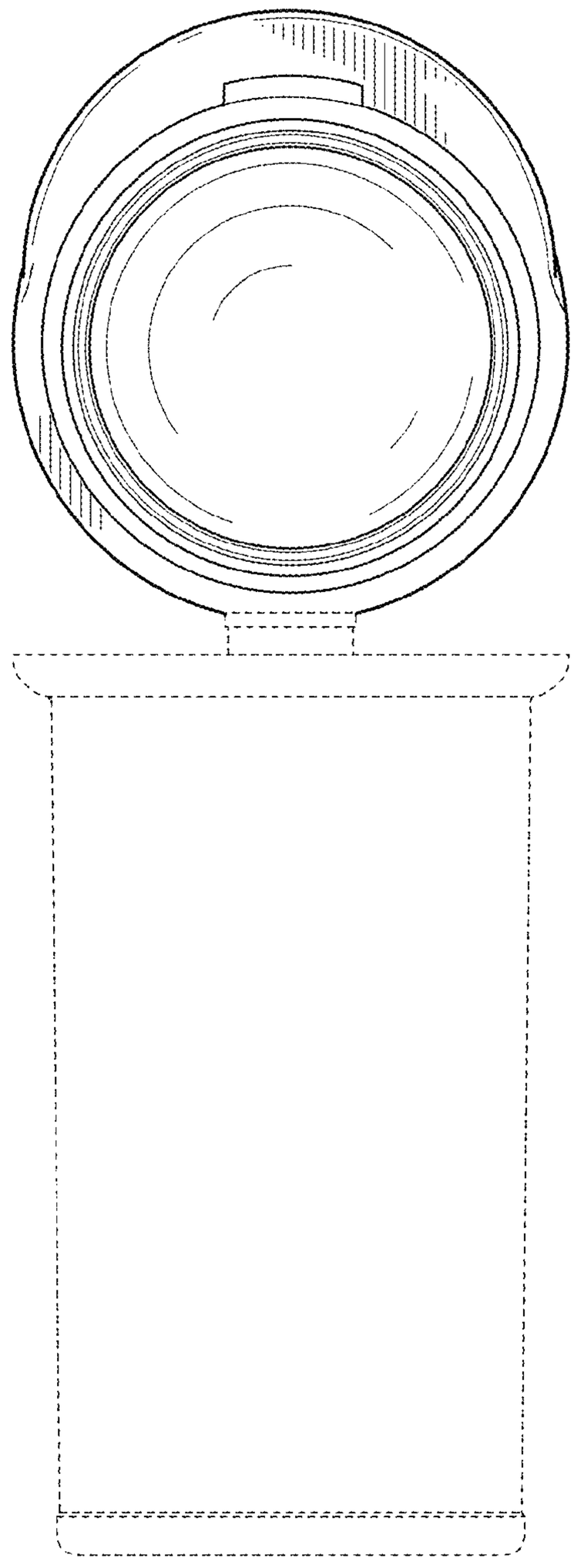

FIG. 13

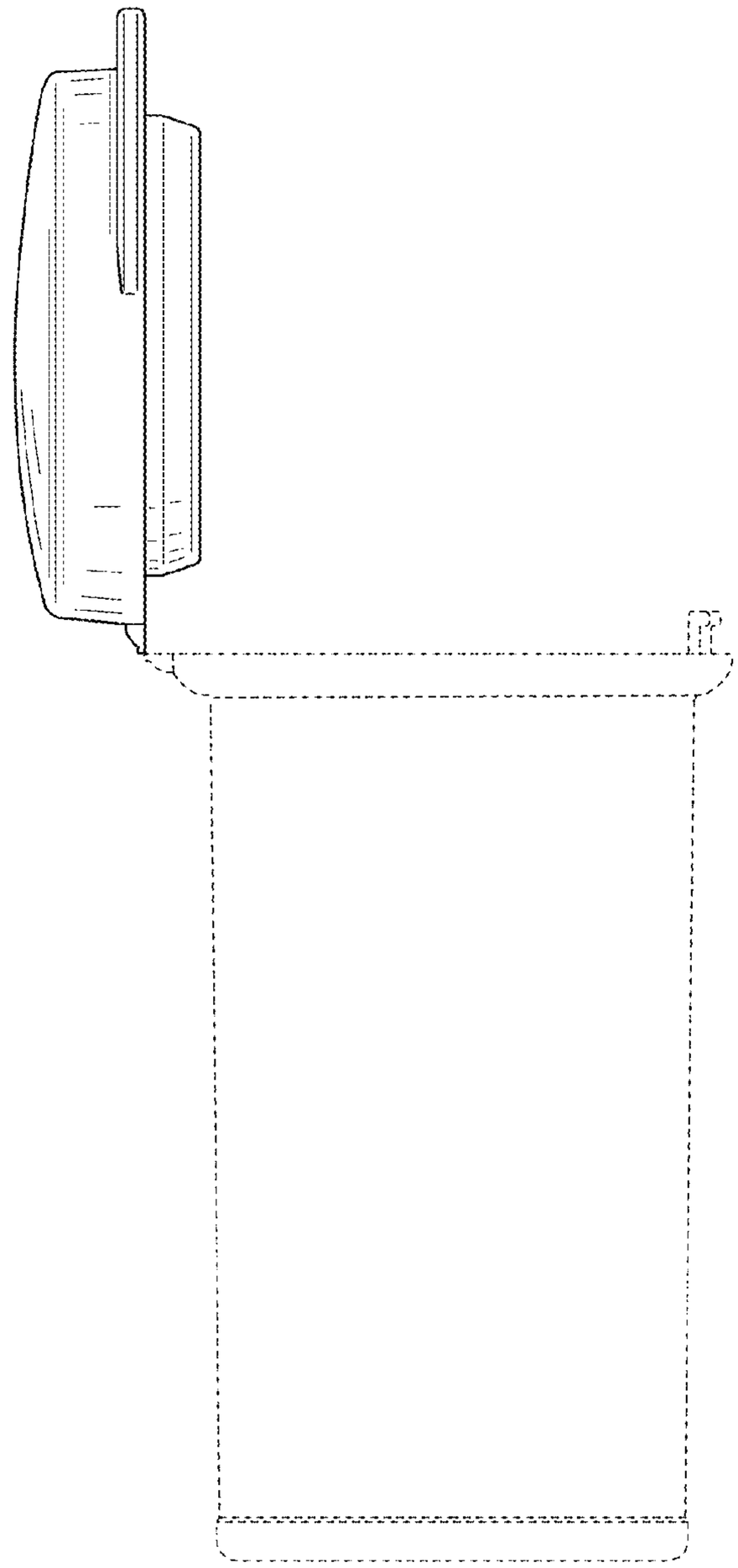

FIG. 14

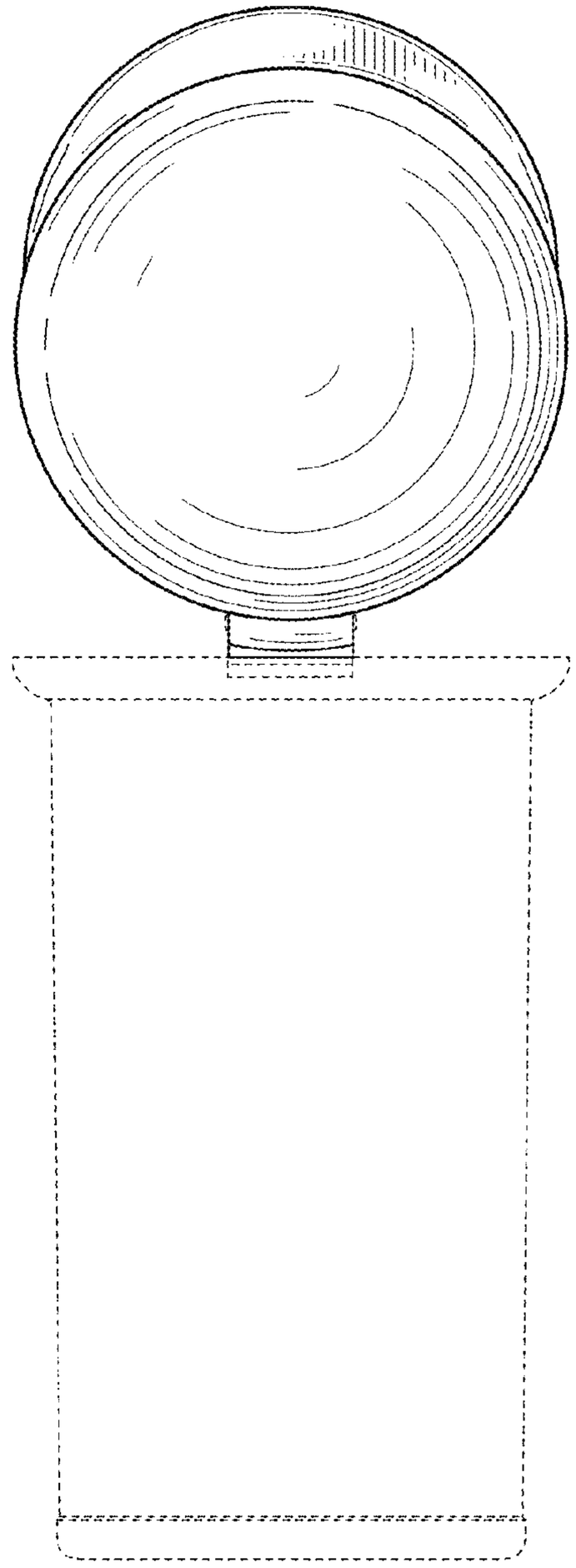

FIG. 15