US00D675581S

# (12) United States Design Patent

Bergmann et al.

(10) Patent No.: US D675,581 S
(45) Date of Patent: ** Feb. 5, 2013

(54) **LIGHT EMITTING DIODE**

(75) Inventors: **Michael Bergmann**, Chapel Hill, NC (US); **Kevin Haberern**, Cary, NC (US); **Matthew Donofrio**, Raleigh, NC (US); **Christopher D. Williams**, Morrisville, NC (US); **Kevin Shawne Schneider**, Cary, NC (US)

(73) Assignee: **Cree, Inc.**, Durham, NC (US)

(**) Term: **14 Years**

(21) Appl. No.: **29/396,907**

(22) Filed: **Jul. 8, 2011**

**Related U.S. Application Data**

(63) Continuation of application No. 29/383,908, filed on Jan. 24, 2011, which is a continuation-in-part of application No. 13/011,417, filed on Jan. 21, 2011.

(51) **LOC (9) Cl.** ..... **13-03**

(52) **U.S. Cl.** ..... **D13/180**

(58) **Field of Classification Search** ..... D13/180; D26/1, 2; 257/79, 80, 81, 88, 89, 95, 98, 257/99, 100, E33.058; 313/483, 498, 500; 362/555, 800; D5/1, 4; D25/48.7, 109, 113; D19/1; D20/27

See application file for complete search history.

(56) **References Cited**

U.S. PATENT DOCUMENTS


| | | | | | |
|---|---|---|---|---|---|
| D264,792 | S | * | 6/1982 | Conti | D7/584 |
| D283,399 | S | * | 4/1986 | Forbes, Jr. | D9/416 |
| D305,410 | S | * | 1/1990 | Tyler | D9/425 |
| D327,234 | S | * | 6/1992 | Vaughn | D11/143 |
| 5,309,001 | A | * | 5/1994 | Watanabe et al. | 257/99 |
| D421,046 | S | * | 2/2000 | Popat | D19/1 |
| D448,404 | S | * | 9/2001 | Hamilton et al. | D19/1 |
| 6,518,598 | B1 | * | 2/2003 | Chen | 257/91 |
| 6,518,601 | B2 | * | 2/2003 | Wirth | 257/98 |
| D476,680 | S | * | 7/2003 | Haas | D19/2 |
| D495,116 | S | * | 8/2004 | Trocme | D1/127 |
| 6,847,052 | B2 | * | 1/2005 | Fan et al. | 257/79 |
| D521,565 | S | * | 5/2006 | Stewart et al. | D20/27 |
| 7,319,044 | B2 | * | 1/2008 | Han et al. | 438/22 |
| D566,057 | S | * | 4/2008 | Edmond et al. | D13/180 |
| D580,888 | S | * | 11/2008 | Liu | D13/180 |
| D582,865 | S | * | 12/2008 | Edmond et al. | D13/180 |
| D599,748 | S | * | 9/2009 | Liu | D13/180 |
| D601,102 | S | * | 9/2009 | Onikiri et al. | D13/180 |
| D602,451 | S | * | 10/2009 | Gielen | D13/180 |
| D609,653 | S | * | 2/2010 | Watanabe et al. | D13/180 |
| D615,505 | S | * | 5/2010 | Butterworth et al. | D13/180 |
| 7,714,334 | B2 | * | 5/2010 | Lin | 257/81 |
| D620,897 | S | * | 8/2010 | Shan et al. | D13/180 |
| D621,801 | S | * | 8/2010 | Hsieh | D13/180 |
| D622,679 | S | * | 8/2010 | Hsieh | D13/180 |
| D623,152 | S | * | 9/2010 | Hwang et al. | D13/180 |
| D624,510 | S | * | 9/2010 | Liu et al. | D13/180 |
| 7,795,623 | B2 | * | 9/2010 | Emerson et al. | 257/79 |
| D627,311 | S | * | 11/2010 | Lai et al. | D13/180 |
| D627,747 | S | * | 11/2010 | Chu et al. | D13/180 |
| D628,540 | S | * | 12/2010 | Tsou | D13/180 |
| D633,876 | S | * | 3/2011 | Shan et al. | D13/180 |
| D645,008 | S | * | 9/2011 | Shan et al. | D13/180 |
| 8,017,963 | B2 | * | 9/2011 | Donofrio et al. | 257/98 |
| 8,049,242 | B2 | * | 11/2011 | Lin et al. | 257/98 |
| 2003/0059972 | A1 | * | 3/2003 | Ikeda et al. | 438/47 |
| 2006/0284191 | A1 | * | 12/2006 | Yang et al. | 257/79 |

* cited by examiner


*Primary Examiner* — Selina Sikder

(74) *Attorney, Agent, or Firm* — Myers Bigel Sibley & Sajovec

(57) **CLAIM**

The ornamental design for a light emitting diode, as shown and described.

**DESCRIPTION**

FIG. **1** is a top perspective view of a light emitting diode showing our design;
FIG. **2** is a bottom perspective view thereof;
FIG. **3** is a top view thereof;
FIG. **4** is a side view thereof;
FIG. **5** is an opposing side view thereof;
FIG. **6** is a front view thereof;
FIG. **7** is bottom view thereof; and,
FIG. **8** is a back view thereof.
The broken lines shown herein are for illustrative purposes only and form no part of the claimed design.

**1 Claim, 3 Drawing Sheets**

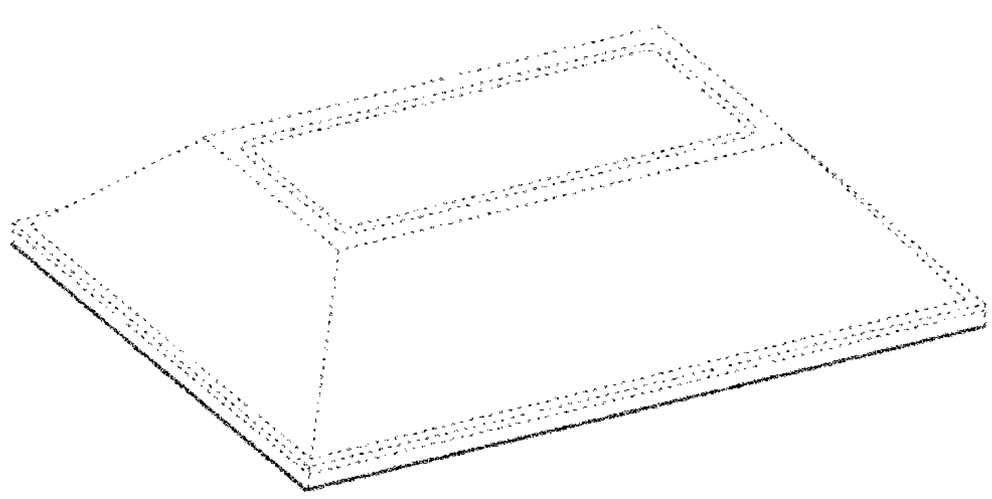

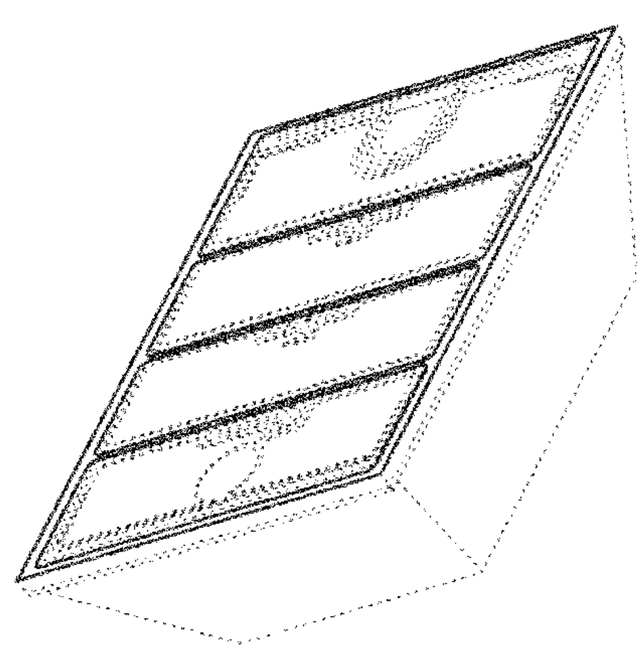

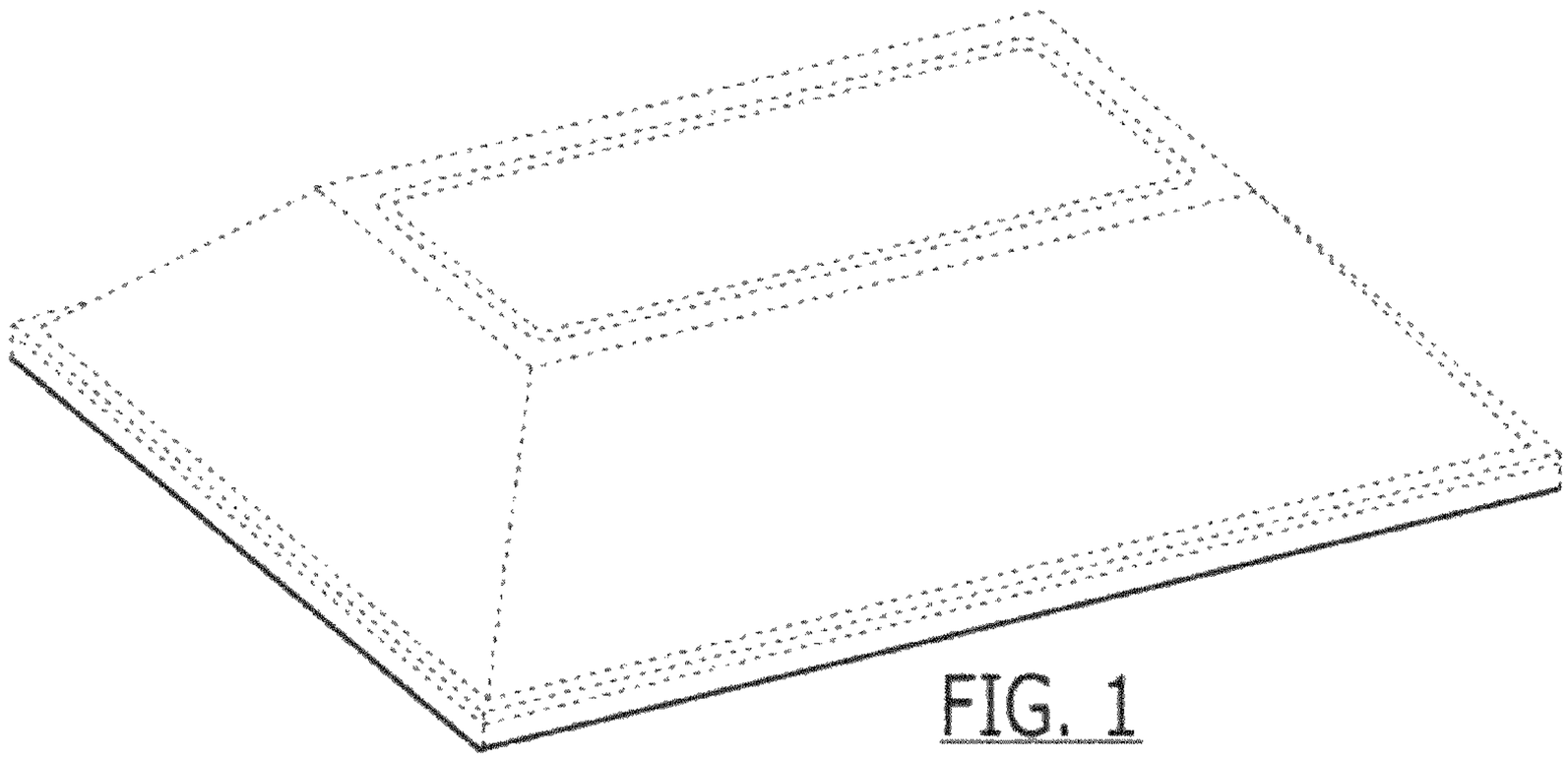

FIG. 1

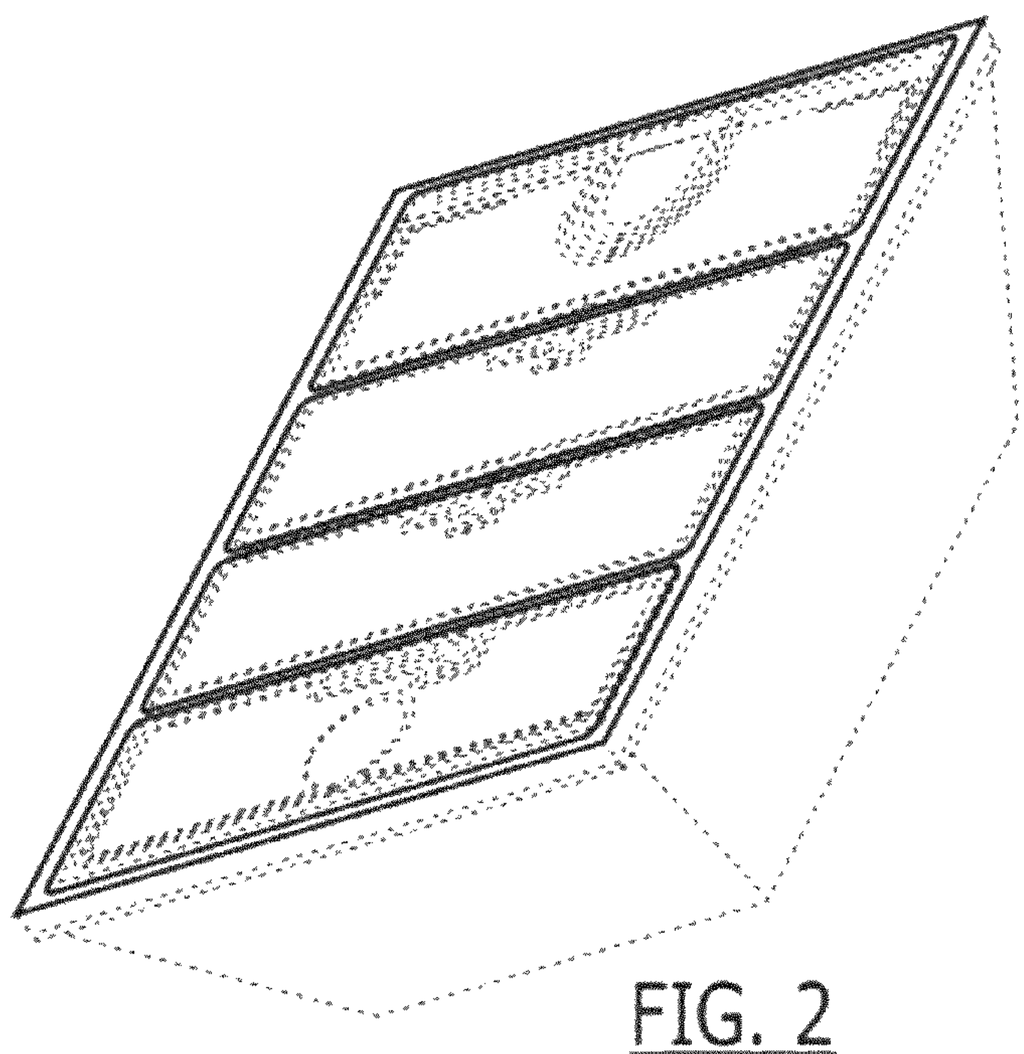

FIG. 2

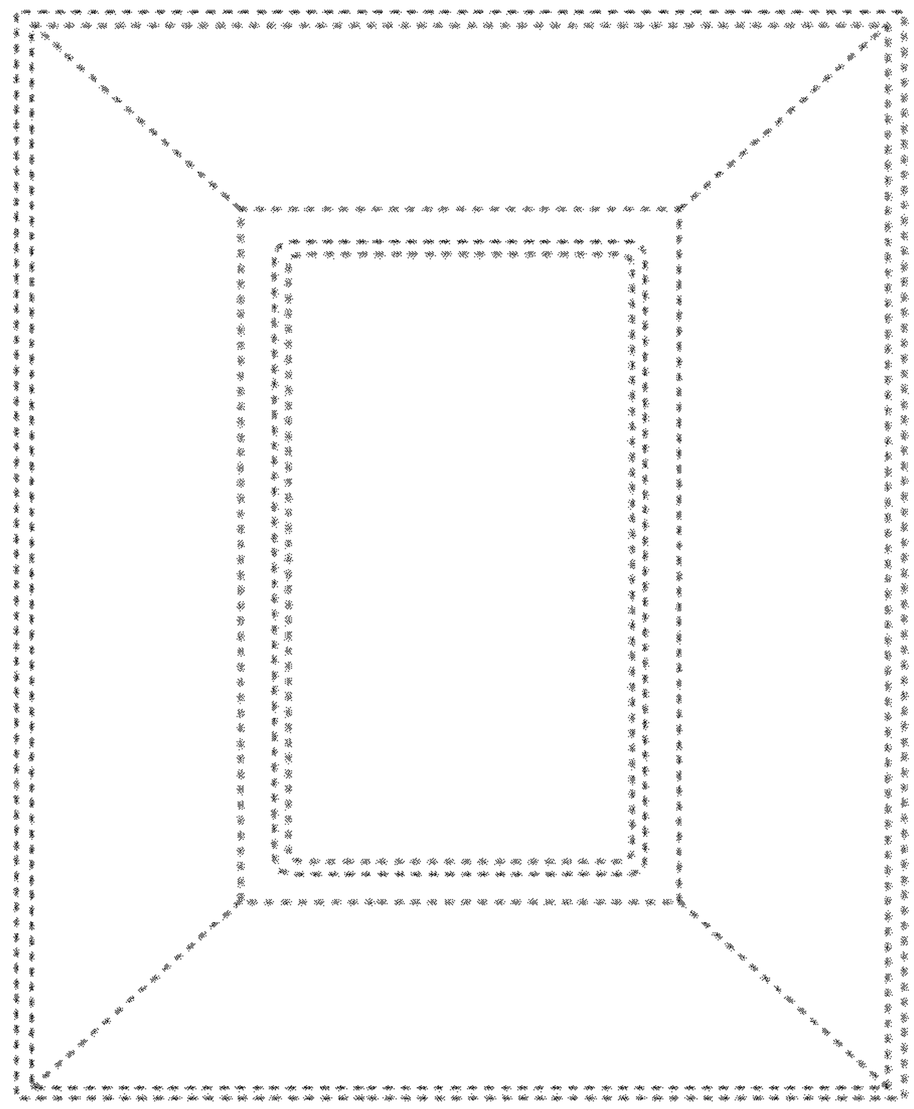

FIG. 3

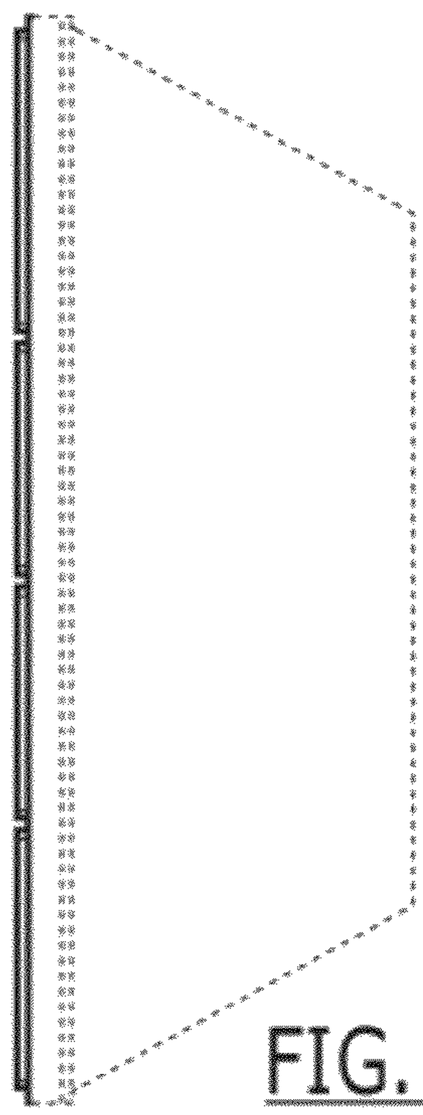

FIG. 4

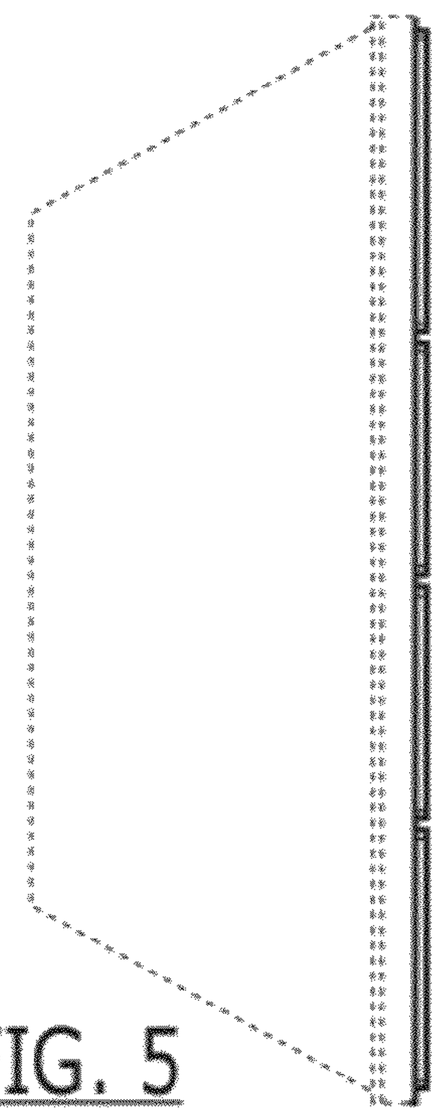

FIG. 5

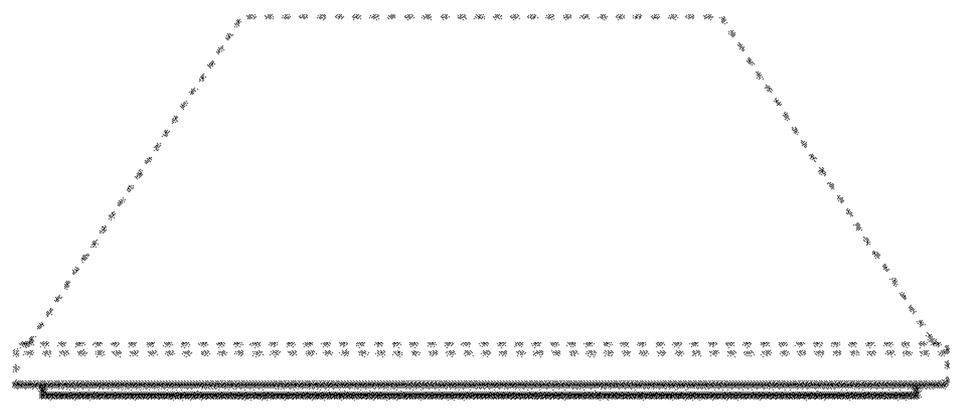

FIG. 6

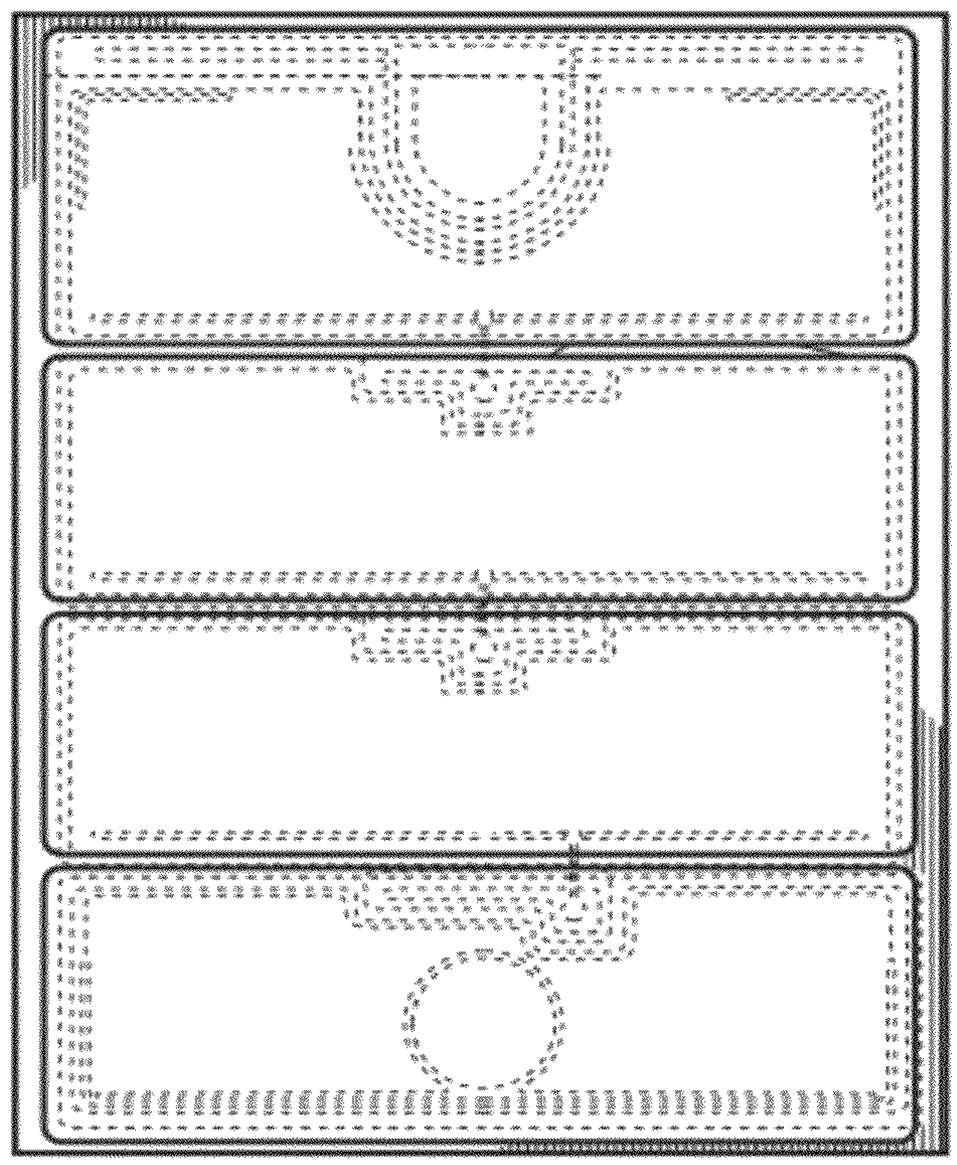

FIG. 7

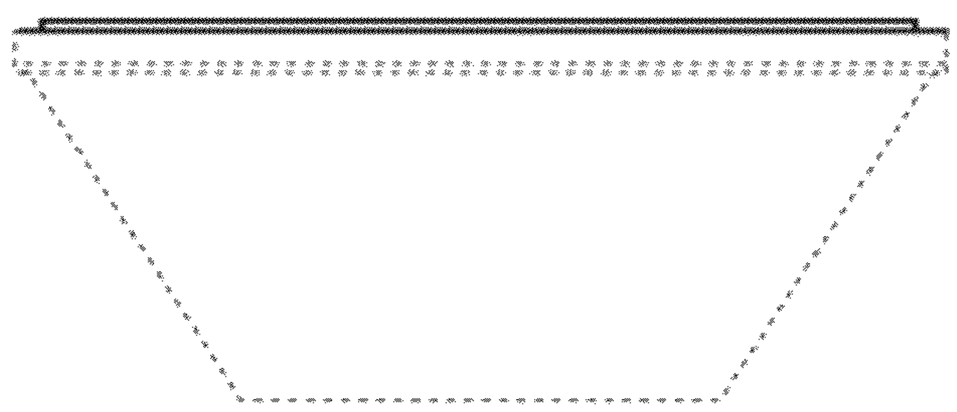

FIG. 8