US00D674825S

(12) United States Design Patent

Lamouree et al.

(10) Patent No.: US D674,825 S
(45) Date of Patent: ** Jan. 22, 2013

(54) **LINEAR MOTOR**

(75) Inventors: **John Lamouree**, East Patchogue, NY (US); **Jonathan Culp**, Mastic Beach, NY (US)

(73) Assignee: **Rockwell Automation Technologies, Inc.**, Mayfield Heights, OH (US)

(**) Term: **14 Years**

(21) Appl. No.: **29/418,294**

(22) Filed: **Apr. 13, 2012**

(51) **LOC (9) Cl.** **15-09**

(52) **U.S. Cl.** **D15/143**

(58) **Field of Classification Search** D13/147, D13/148, 158; D15/5, 143, 148, 199; D23/233; 74/89.15, 411.5, 490.09; 297/14, 325, 327; 310/20, 80; 319/80; 414/560–569
See application file for complete search history.

(56) **References Cited**

U.S. PATENT DOCUMENTS

D375,965 S * 11/1996 Shiino et al. D15/143
D378,214 S * 2/1997 Ikumi D15/7
D399,491 S * 10/1998 Nagai et al. D13/158
D407,409 S * 3/1999 Masuda et al. D15/5
D412,917 S * 8/1999 Nagai et al. D15/199
D413,129 S * 8/1999 Nagai et al. D15/199
D611,514 S * 3/2010 Fukano et al. D15/143
D624,572 S * 9/2010 Fukano et al. D15/143
D636,799 S * 4/2011 Fukano et al. D15/143
D656,169 S * 3/2012 Fukano et al. D15/143
D657,406 S * 4/2012 Saito D15/143
2005/0011291 A1* 1/2005 Nagai et al. 74/89.32

* cited by examiner

Primary Examiner — Patricia Palasik
(74) *Attorney, Agent, or Firm* — Fletcher Yoder, P.C.; R. Scott Speroff; John M. Miller

(57) **CLAIM**

The ornamental design for a linear motor, as shown and described.

DESCRIPTION

FIG. **1** is a perspective view of the ornamental design for the linear motor;
FIG. **2** is a right side view of the linear motor of FIG. **1**;
FIG. **3** is a left side view of the linear motor of FIG. **1**;
FIG. **4** is a top view of the linear motor of FIG. **1**;
FIG. **5** is a bottom view of the linear motor of FIG. **1**;
FIG. **6** is a front view of the linear motor of FIG. **1**; and,
FIG. **7** is a rear view of the linear motor of FIG. **1**.
In these drawings, the solid lines illustrate the claimed ornamental design, whereas the broken lines illustrate environmental features that form no part of the claimed ornamental design.

1 Claim, 4 Drawing Sheets

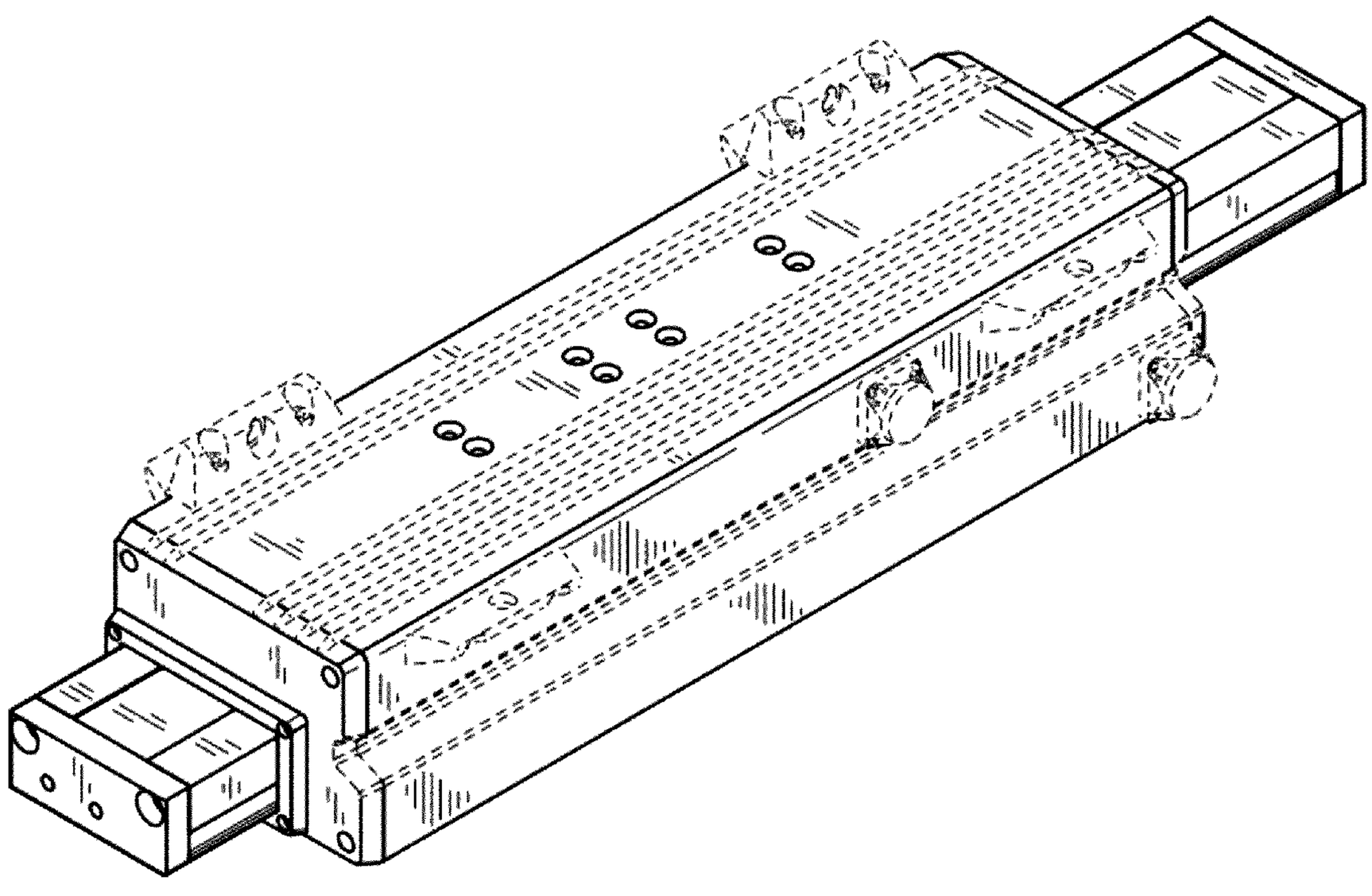

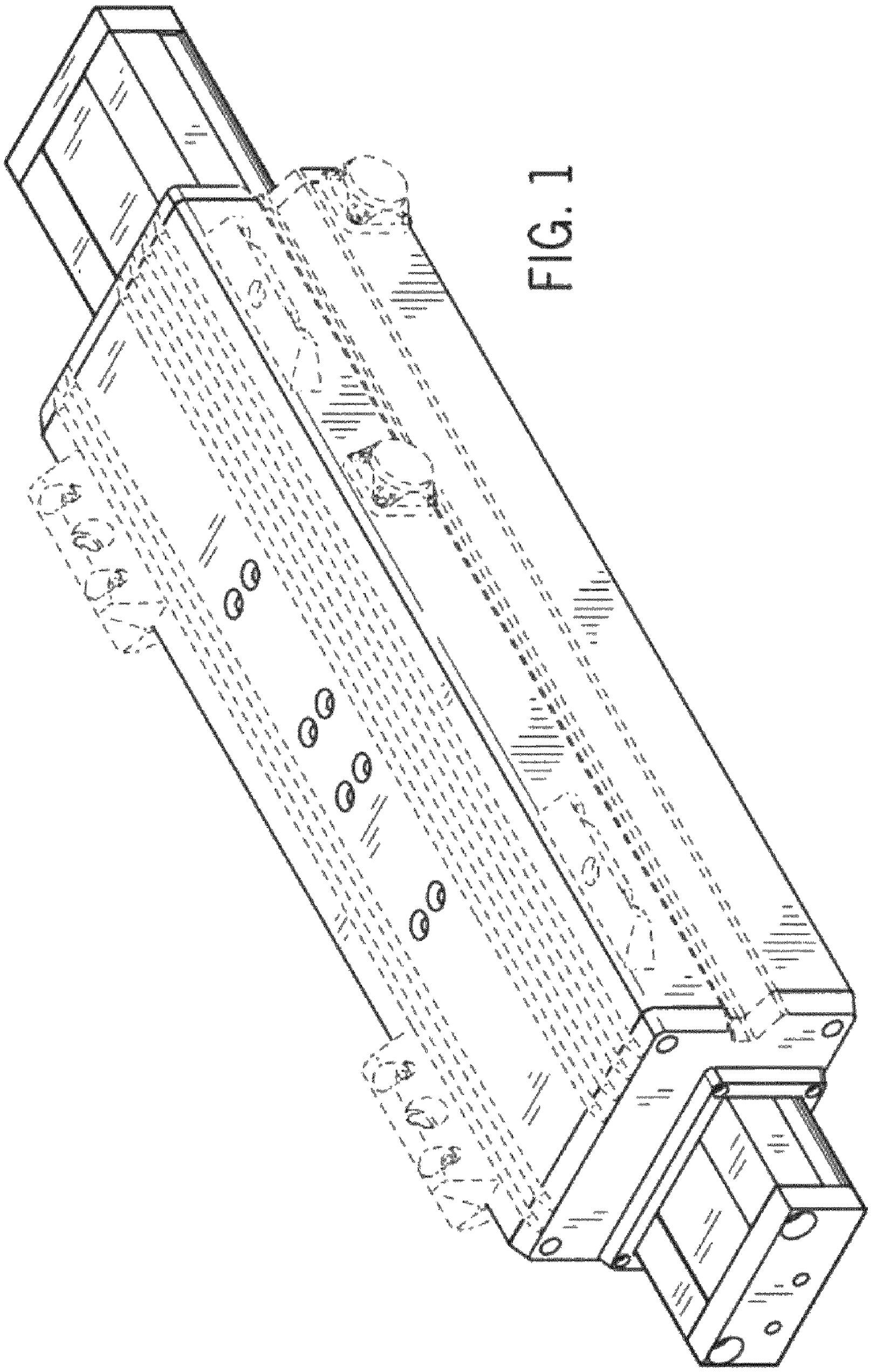

FIG. 1

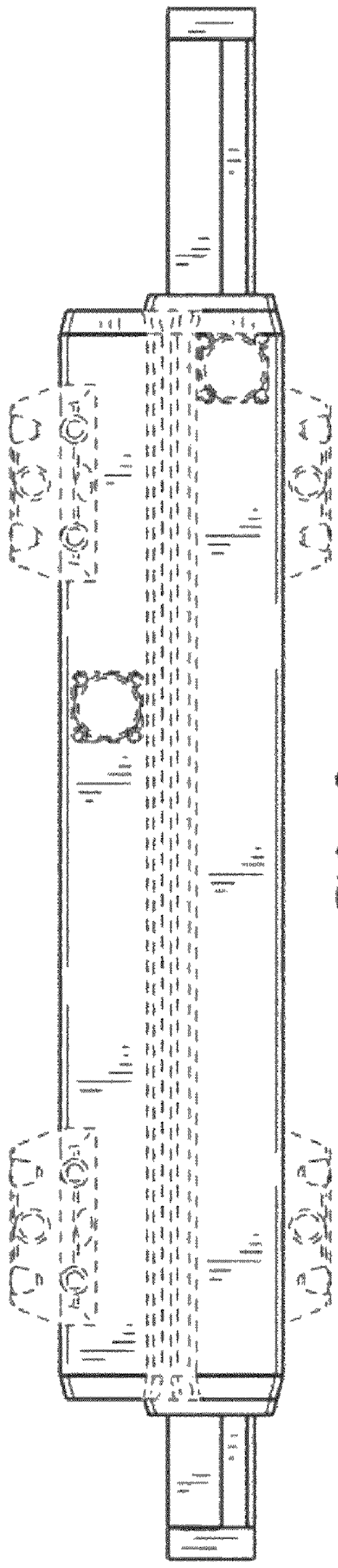

FIG. 2

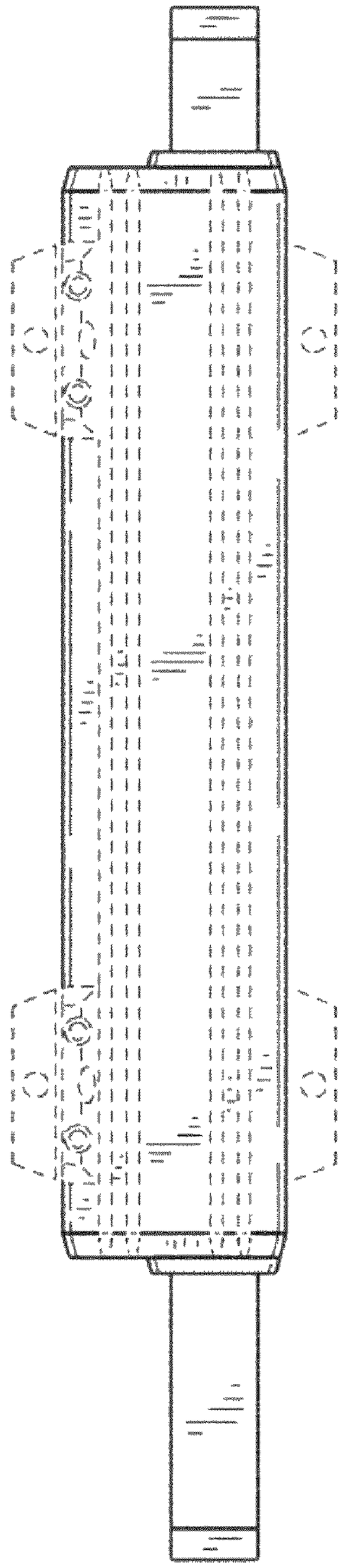

FIG. 3

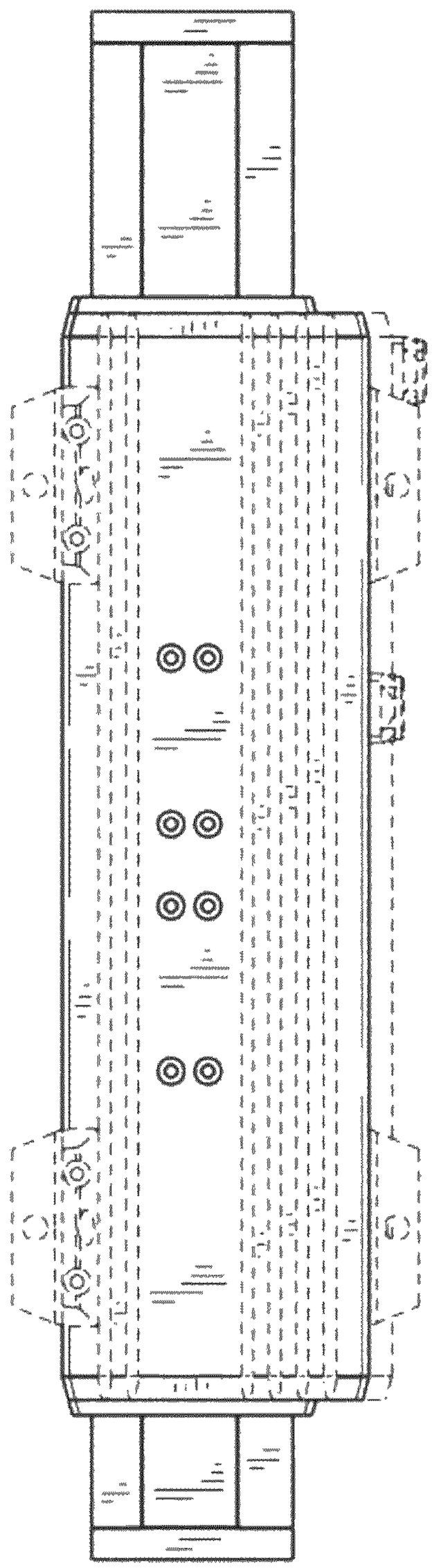

FIG. 4

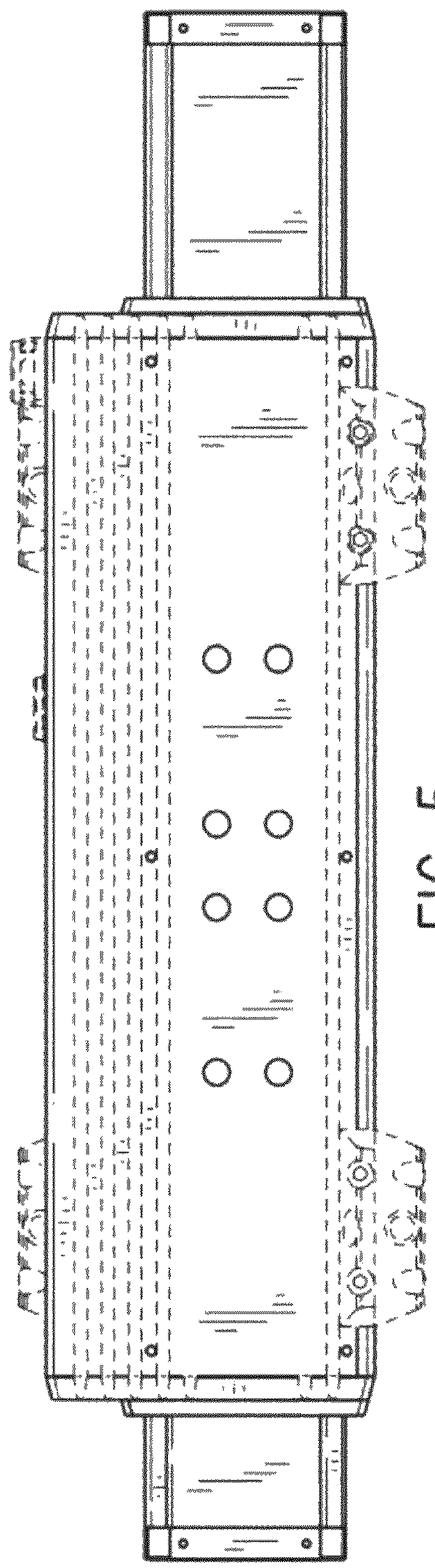

FIG. 5

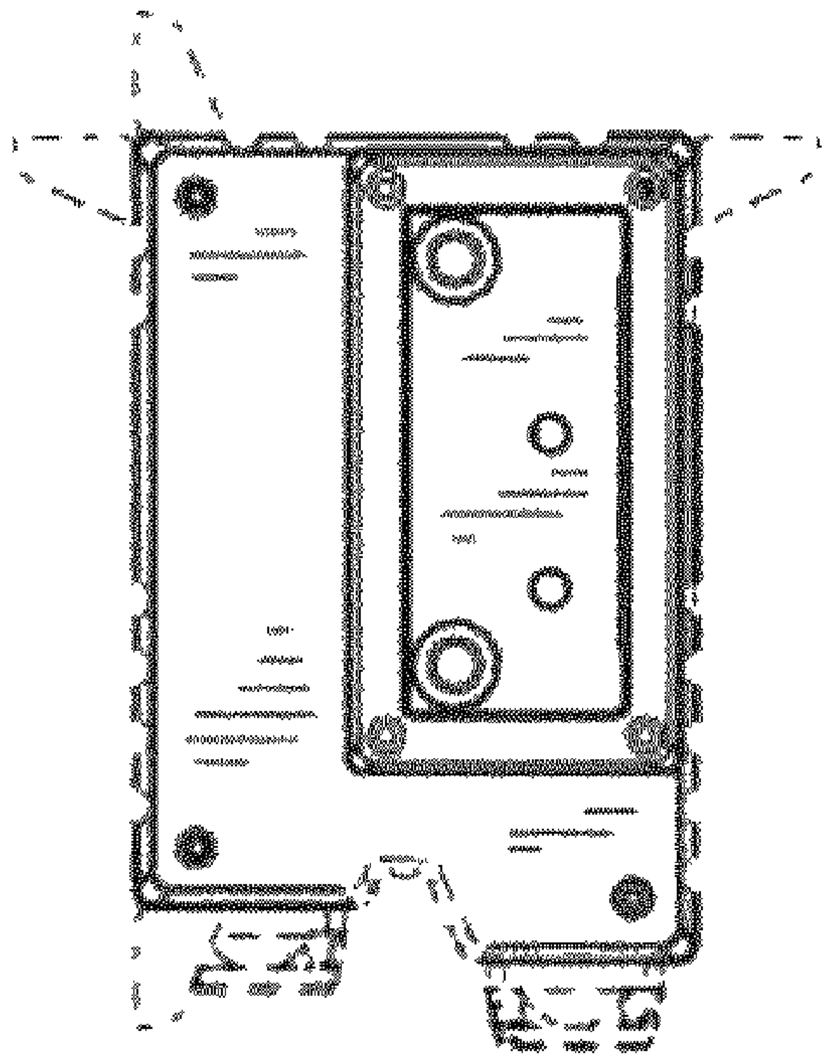

FIG. 7

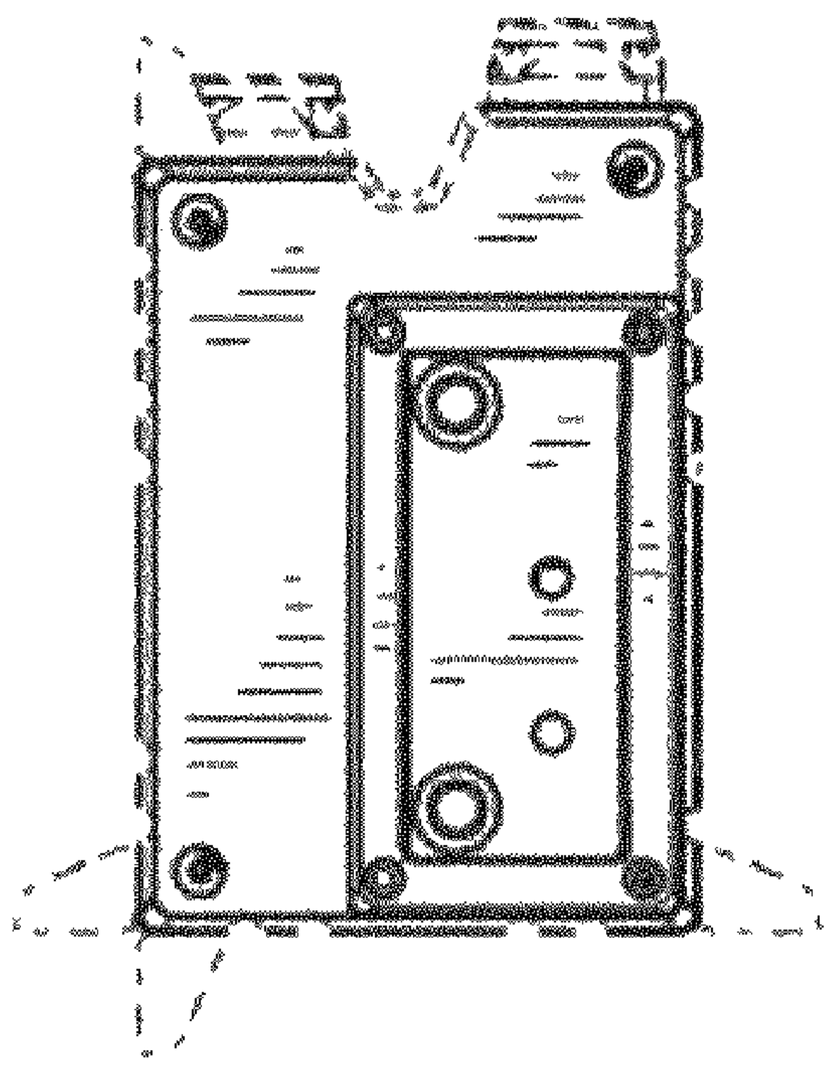

FIG. 6