US00D673829S

(12) United States Design Patent

Takeshima et al.

(10) Patent No.: US D673,829 S
(45) Date of Patent: ** Jan. 8, 2013

(54) **BATTERY OPERATED OIL HYDRAULIC CRIMPING TOOL**

(75) Inventors: **Masafumi Takeshima**, Matsumoto (JP); **Masaki Miyazawa**, Matsumoto (JP)

(73) Assignee: **Izumi Products Company**, Nagano (JP)

(**) Term: **14 Years**

(21) Appl. No.: **29/358,896**

(22) Filed: **Apr. 1, 2010**

(30) **Foreign Application Priority Data**

Oct. 2, 2009 (JP) 2009-023046
Oct. 2, 2009 (JP) 2009-023047

(51) **LOC (9) Cl.** **08-03**
(52) **U.S. Cl.** **D8/61**
(58) **Field of Classification Search** D8/61, D8/62, 67, 69; 81/57, 57.11, 57.14, 57.26, 81/429, 464, 469; 173/2, 170, 176, 181
See application file for complete search history.

(56) **References Cited**

U.S. PATENT DOCUMENTS

D405,233 S * 2/1999 Hirabayashi et al. D8/61
6,446,482 B1 * 9/2002 Heskey et al. 72/453.16
6,769,173 B2 * 8/2004 Chadbourne 29/761
6,990,888 B2 * 1/2006 Harwath et al. 91/428
7,111,488 B2 * 9/2006 Lefavour et al. 72/453.16
D531,867 S * 11/2006 Payne et al. D8/61
7,254,982 B2 * 8/2007 Frenken 72/453.15
D567,045 S * 4/2008 Chen D8/61
7,487,654 B2 * 2/2009 Lefavour et al. 72/31.01
7,762,117 B2 * 7/2010 Faucher et al. 72/482.92
7,841,223 B2 * 11/2010 Rollins et al. 72/453.15
7,882,722 B2 * 2/2011 Lefavour et al. 72/416
7,926,321 B2 * 4/2011 Rollins et al. 72/453.15
D657,221 S * 4/2012 Isobe et al. D8/61
D663,181 S * 7/2012 Zhou et al. D8/61

* cited by examiner

Primary Examiner — Austin Murphy
(74) *Attorney, Agent, or Firm* — Merchant & Gould P.C.

(57) **CLAIM**

Ornamental designs for a battery operated oil hydraulic crimping tool.

DESCRIPTION

FIG. **1** is a front elevation view of a battery operated oil hydraulic crimping tool,
FIG. **2** is a rear elevation view thereof,
FIG. **3** is a top plan view thereof,
FIG. **4** is a bottom plan view thereof,
FIG. **5** is a left elevation view thereof,
FIG. **6** is a right elevation view thereof,
FIG. **7** is a front elevation view of the battery operated oil hydraulic crimping tool when four crimping dies come close to one another with three of them stuck out inward; and,
FIG. **8** is a perspective view thereof.

The broken line showing of the battery operated oil hydraulic crimping tool is included for the purpose of illustrating environmental structure and forms no part of the claimed design. The battery operated oil hydraulic crimping tool is equipped with a rechargeable battery and used to hold and crimp a crimping terminal or sleeve with four dies coming close to one another with three of them stuck out inward on oil hydraulic pressure.

1 Claim, 7 Drawing Sheets

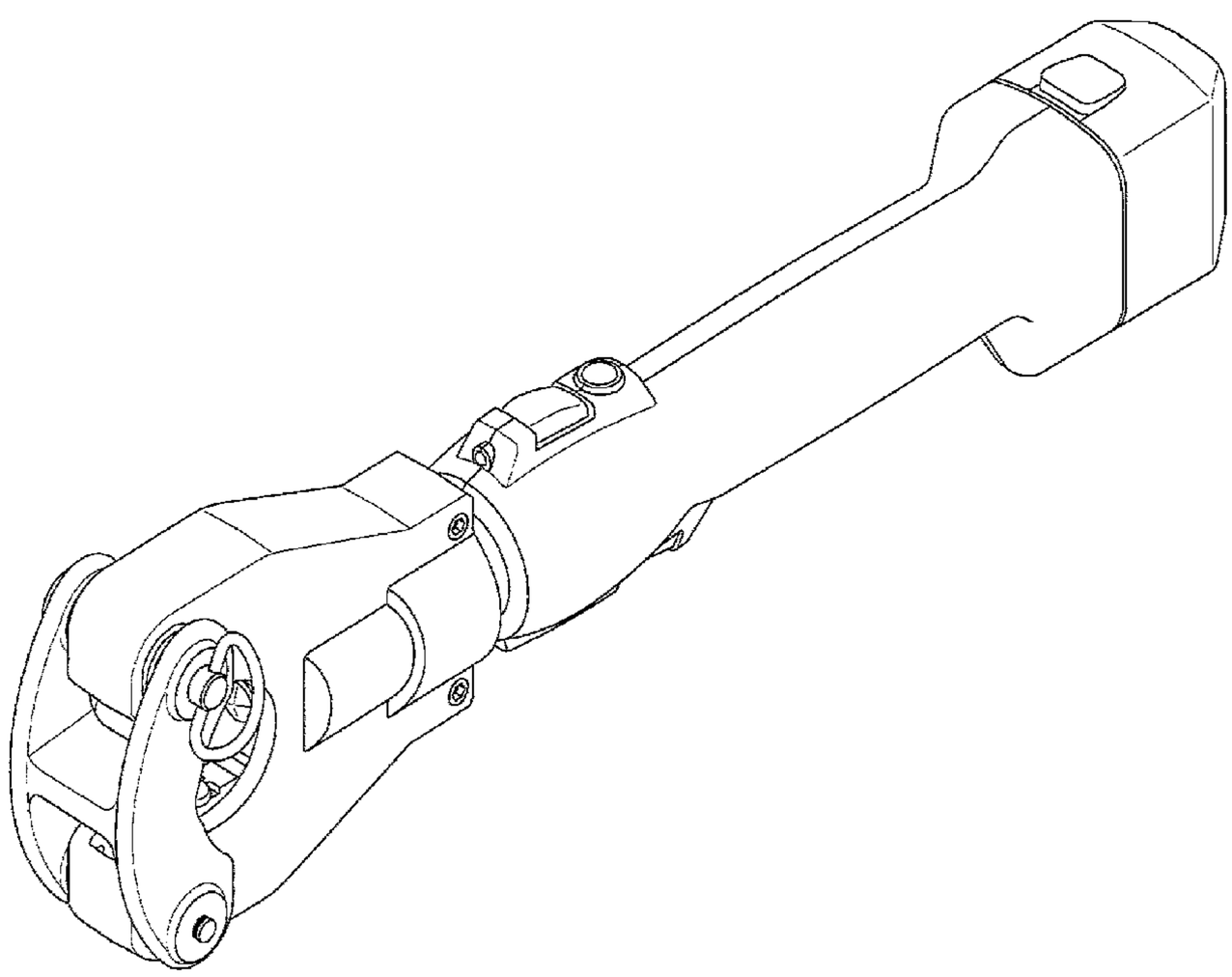

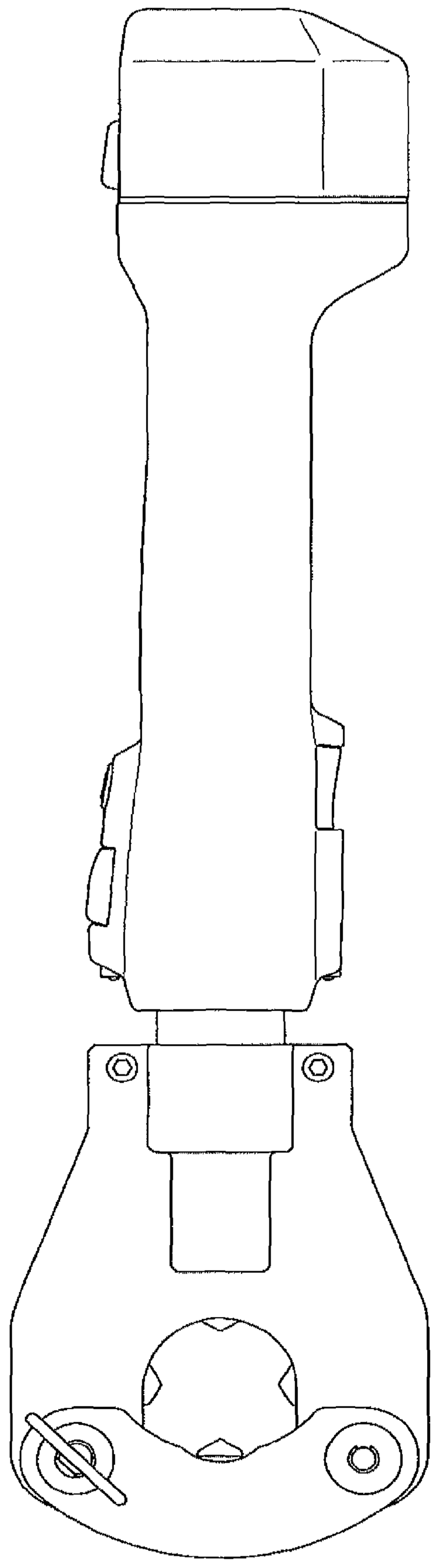

FIG.1

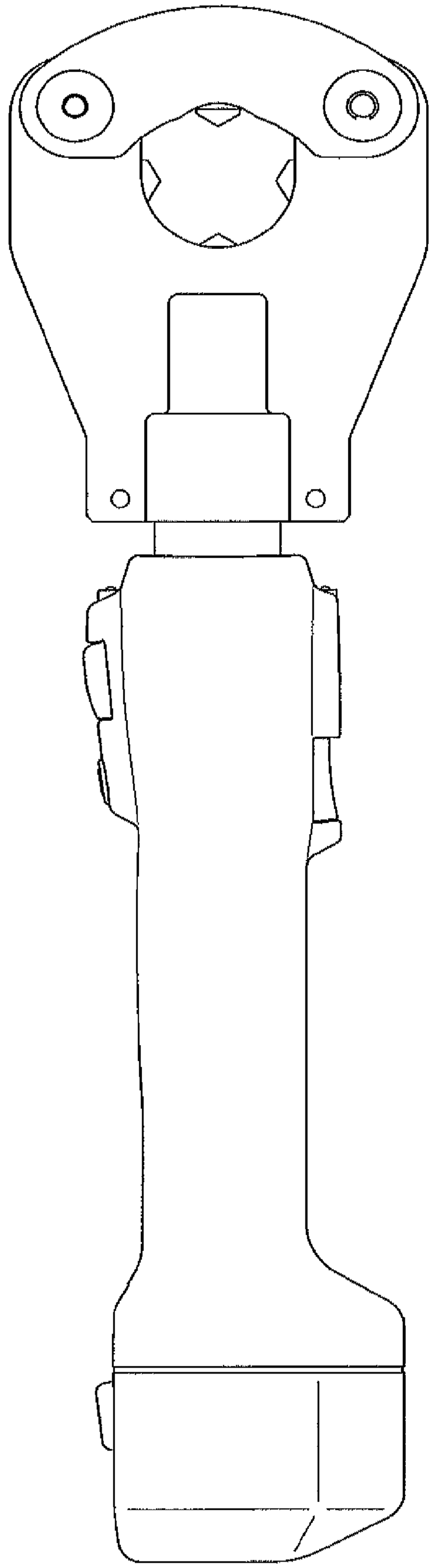

FIG.2

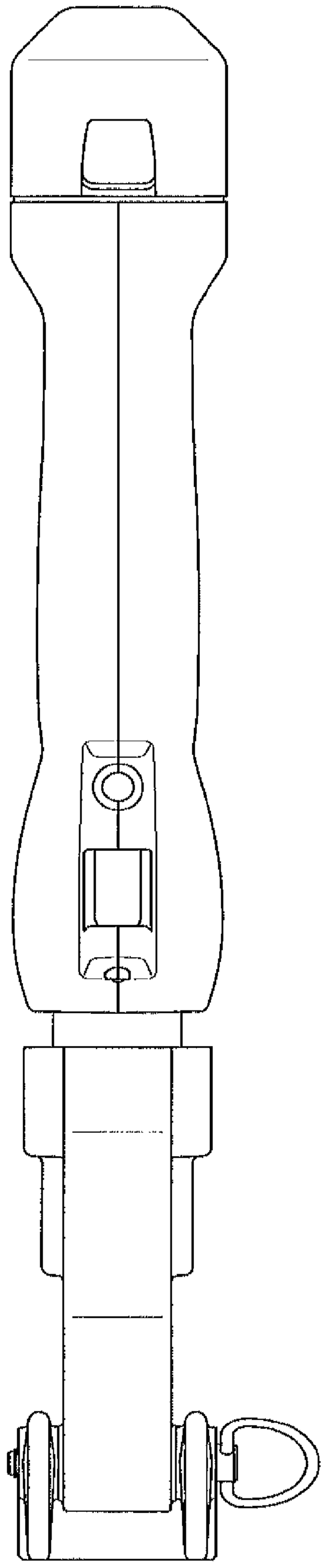

FIG.3

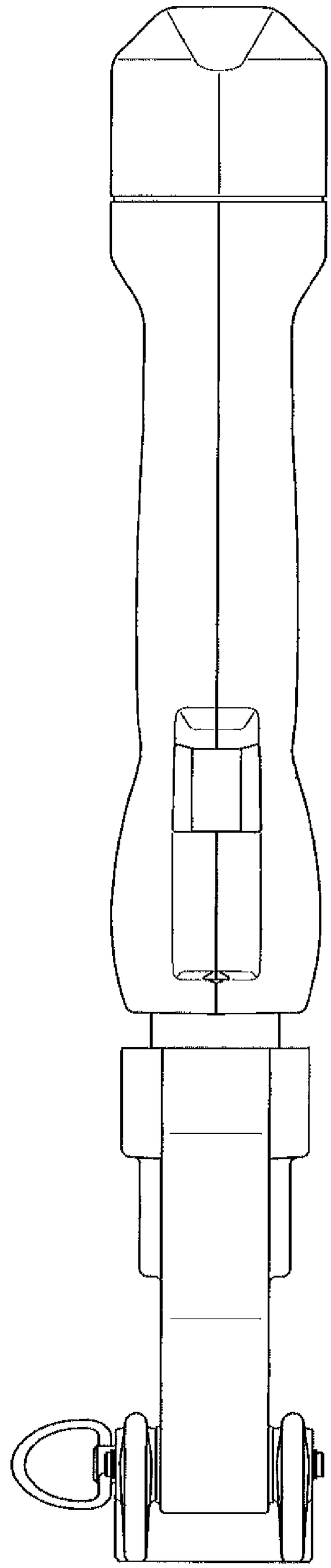

FIG.4

FIG.5

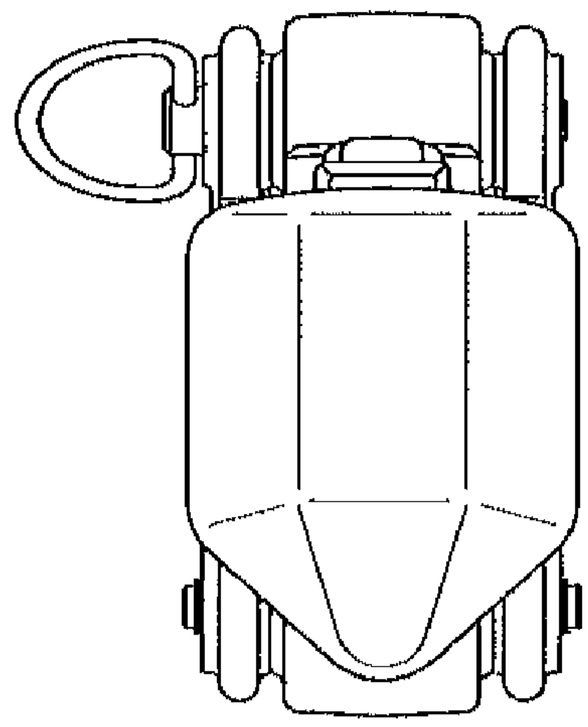

FIG.6

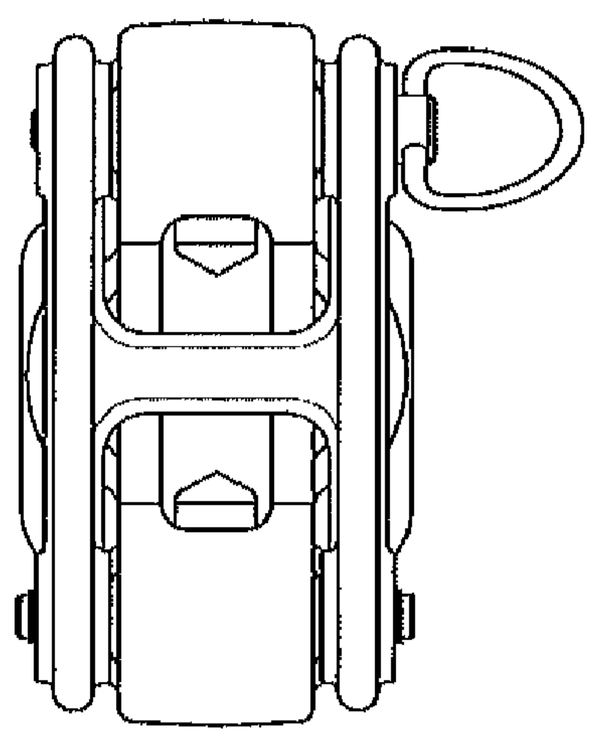

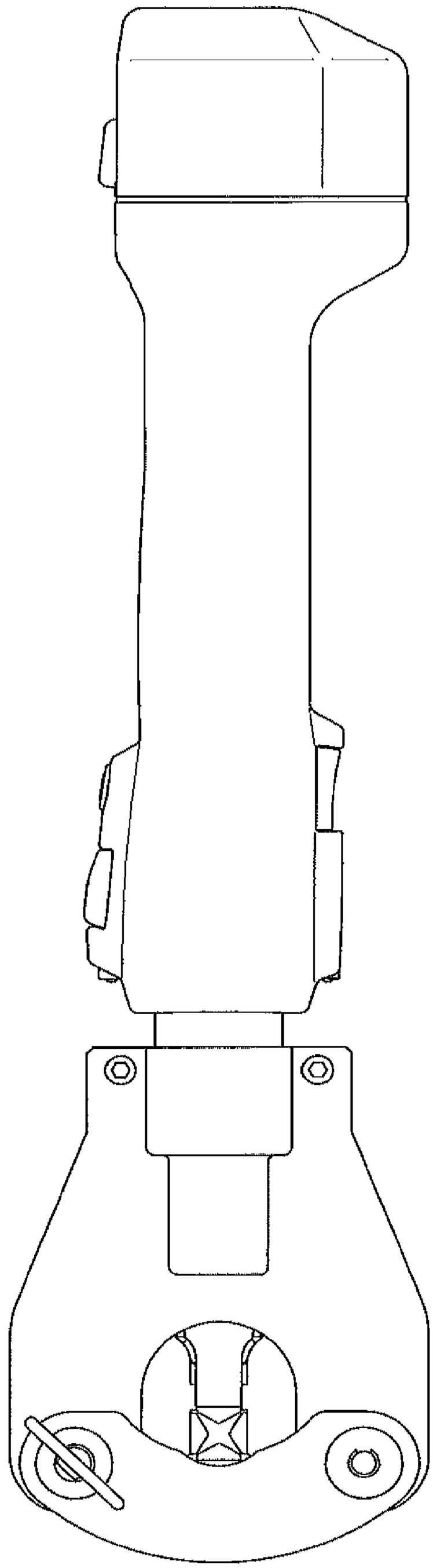

FIG.7

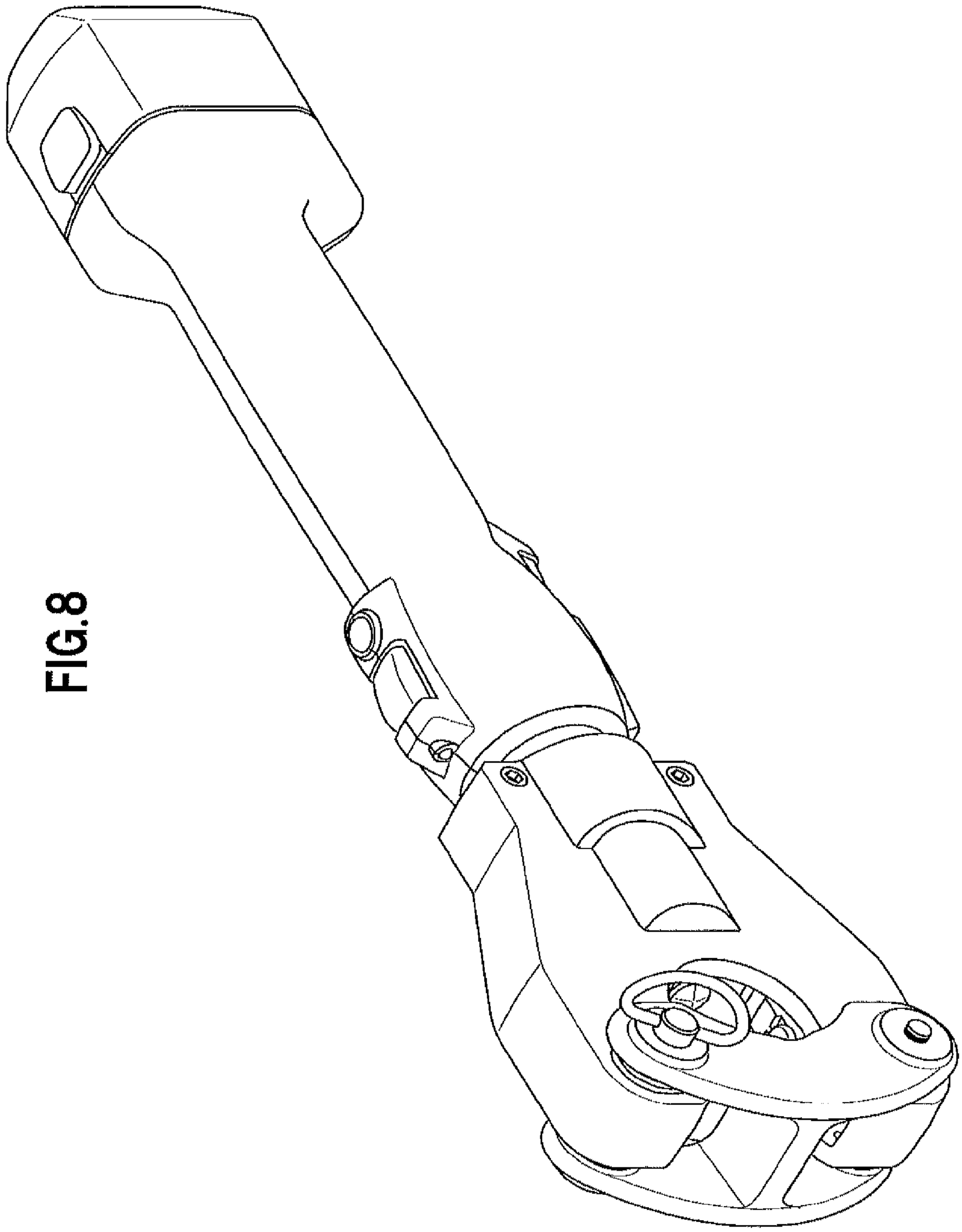

FIG.8