US00D672009S

# (12) United States Design Patent

Flournoy et al.

(10) Patent No.: US D672,009 S
(45) Date of Patent: ** Dec. 4, 2012

(54) **EXTRUDED MEDIA FOR SUPPORTING GROWTH BIOLOGY WITHIN A WASTEWATER TREATING SYSTEM**

(75) Inventors: **Wayne J. Flournoy**, Chapel Hill, NC (US); **Richard L. Pehrson**, Efland, NC (US)

(73) Assignee: **Entex Technologies Inc.**, Chapel Hill, NC (US)

(**) Term: **14 Years**

(21) Appl. No.: **29/363,301**

(22) Filed: **Jun. 8, 2010**

**Related U.S. Application Data**

(63) Continuation-in-part of application No. 29/346,510, filed on Nov. 2, 2009, now Pat. No. Des. 618,760.

(51) **LOC (9) Cl.** ..... **23-01**

(52) **U.S. Cl.** ..... **D23/207**

(58) **Field of Classification Search** ..... D23/207, D23/269; 210/614, 616, 150

See application file for complete search history.

(56) **References Cited**

U.S. PATENT DOCUMENTS

| | | | |
|---|---|---|---|
| 578,548 | A | 3/1897 | Deruelle |
| 3,266,787 | A | 8/1966 | Eckert |
| 3,617,541 | A | 11/1971 | Pan |
| 3,752,453 | A | 8/1973 | Doyne |
| 3,785,620 | A | 1/1974 | Huber |
| 3,842,804 | A | 10/1974 | Christensen et al. |
| 3,864,246 | A | 2/1975 | Casey et al. |
| 3,882,027 | A | 5/1975 | Lunt |

(Continued)

FOREIGN PATENT DOCUMENTS

DE 3728812 A1 10/1988

(Continued)

OTHER PUBLICATIONS

Pehrson et al., U.S. Appl. No. 12/719,527, filed Mar. 8, 2010.

(Continued)

*Primary Examiner* — Robin V Webster

(74) *Attorney, Agent, or Firm* — Stanislav Antolin

(57) **CLAIM**

The ornamental design for an extruded media for supporting growth biology within a wastewater treating system, as shown and described.

**DESCRIPTION**

The present application in turn claims benefits under 35 U.S.C. § 120 to commonly assigned U.S. application Ser. No. 29/321,003 filed on Jul. 9, 2008, the subject matter of which is incorporated herein by reference, that in turn claims benefits under 35 U.S.C. § 120 to commonly assigned U.S. application Ser. No. 11/552,778 filed on Oct. 25, 2006, the subject matter of which is incorporated herein by reference.

FIG. **1** is a diagram illustrating a cross-sectional view of an extruded media or injection molded media for supporting growth biology within a biological reactor wherein the plane of the cross-sectional view is substantially perpendicular to the longitudinal axis and the view is substantially perpendicular to the plane of the cross-sectional view and substantially along the longitudinal axis of the media;

FIG. **2** is a diagram illustrating the left side view of the extruded media or injection molded media of FIG. **1**, the right side view of the media being a mirror image; and,

FIG. **3** is a diagram illustrating an isometric view of the extruded media or injection molded media of FIG. **1**.

The broken lines shown in FIGS. **1-3** are included for the purpose of illustrating those portions of the surface of the claimed media design where surface features form no part of the claimed media design and represent only the environment of the claimed media design. None of the broken lines forms a part of the claimed media.

**1 Claim, 3 Drawing Sheets**

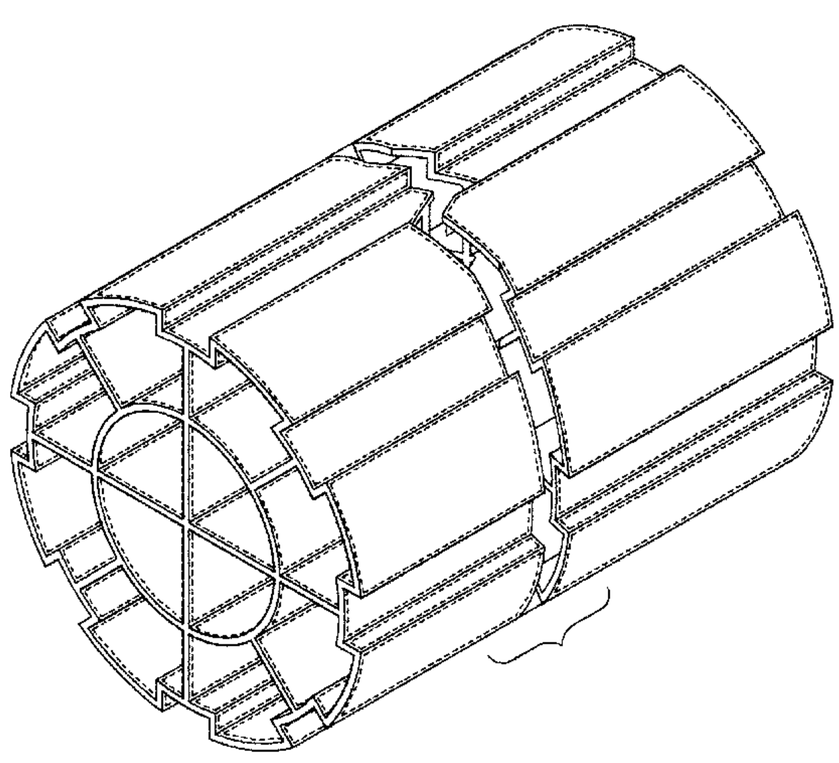

U.S. PATENT DOCUMENTS

| | | | |
|---|---|---|---|
| 3,914,351 | A | 10/1975 | McKeown et al. |
| 3,947,532 | A | 3/1976 | Skold et al. |
| 3,954,615 | A | 5/1976 | Shelef |
| 3,957,931 | A | 5/1976 | Ellis |
| 3,966,608 | A | 6/1976 | Mason et al. |
| D243,531 | S | 3/1977 | Strigle, Jr. |
| 4,122,011 | A | 10/1978 | Strigle, Jr. |
| 4,169,050 | A | 9/1979 | Serfling et al. |
| 4,177,147 | A | 12/1979 | Roberts |
| 4,195,043 | A | 3/1980 | Foote et al. |
| 4,267,052 | A | 5/1981 | Chang |
| 4,279,753 | A | 7/1981 | Nielson et al. |
| 4,296,050 | A | 10/1981 | Meier |
| 4,303,600 | A | 12/1981 | Roe, Jr. |
| 4,333,893 | A | 6/1982 | Clyde |
| 4,422,930 | A | 12/1983 | Hatanaka |
| 4,425,231 | A | 1/1984 | Fujimoto et al. |
| 4,431,549 | A | 2/1984 | Highstreet et al. |
| 4,434,061 | A | 2/1984 | McDowell |
| 4,511,519 | A | 4/1985 | Hsia |
| 4,522,767 | A | 6/1985 | Billet et al. |
| 4,595,296 | A | 6/1986 | Parks |
| 4,599,174 | A | 7/1986 | McDowell |
| 4,600,544 | A | 7/1986 | Mix |
| 4,620,930 | A | 11/1986 | McDowell |
| 4,639,314 | A | 1/1987 | Tyer |
| 4,668,387 | A | 5/1987 | Davie et al. |
| 4,668,442 | A | 5/1987 | Lang |
| 4,806,288 | A | 2/1989 | Nowosinski et al. |
| 4,818,404 | A | 4/1989 | McDowell |
| 4,940,540 | A | 7/1990 | McDowell |
| D345,410 | S | 3/1994 | Del Prete |
| 5,298,164 | A | 3/1994 | Hapach et al. |
| D353,438 | S | 12/1994 | Yuksel |
| D354,544 | S | 1/1995 | Erwes |
| 5,458,779 | A | 10/1995 | Odegaard |
| 5,468,392 | A | 11/1995 | Hanson et al. |
| 5,498,376 | A | 3/1996 | St. Louis et al. |
| 5,543,039 | A | 8/1996 | Odegaard |
| 5,549,828 | A | 8/1996 | Ehrlich |
| 5,580,644 | A | 12/1996 | Minami |
| 5,585,266 | A | 12/1996 | Plitt et al. |
| 5,690,819 | A | 11/1997 | Chianh |
| 5,693,383 | A | 12/1997 | Basse et al. |
| 5,771,716 | A | 6/1998 | Schlussel |
| 5,779,886 | A | 7/1998 | Couture |
| 5,839,828 | A | 11/1998 | Glanville |
| 5,863,128 | A | 1/1999 | Mazzei |
| 6,039,873 | A | 3/2000 | Stahler |
| 6,109,781 | A | 8/2000 | Ogasawara et al. |
| 6,126,829 | A | 10/2000 | Gunnarsson et al. |
| 6,170,216 | B1 | 1/2001 | Rye et al. |
| 6,173,526 | B1 | 1/2001 | Mazzei |
| 6,383,373 | B1 | 5/2002 | Nakao et al. |
| 6,444,126 | B1 | 9/2002 | Gates et al. |
| 6,464,211 | B1 | 10/2002 | Downs |
| D465,257 | S | 11/2002 | Van Olst et al. |
| 6,524,849 | B1 | 2/2003 | Adams et al. |
| 6,685,826 | B1 | 2/2004 | James |
| 6,726,838 | B2 | 4/2004 | Schechter et al. |
| 6,730,214 | B2 | 5/2004 | Mazzei |
| 6,852,227 | B1 | 2/2005 | Petrone |
| 6,858,144 | B2 | 2/2005 | Narita et al. |
| 6,899,359 | B2 | 5/2005 | Presby |
| 6,916,421 | B1 | 7/2005 | Cullinan et al. |
| 7,189,323 | B2 | 3/2007 | Lofqvist et al. |
| 7,246,795 | B2 | 7/2007 | Niknafs et al. |
| 7,445,715 | B2 | 11/2008 | Pehrson et al. |
| 7,691,262 | B2 | 4/2010 | Pehrson et al. |
| D618,760 | S | 6/2010 | Flournoy et al. |
| 2003/0127378 | A1 | 7/2003 | Schechter et al. |
| 2003/0192827 | A1 | 10/2003 | McDowell et al. |
| 2004/0011737 | A1 | 1/2004 | McDowell et al. |
| 2004/0151547 | A1 | 8/2004 | Presby |
| 2004/0178132 | A1 | 9/2004 | Nakhla et al. |
| 2004/0256315 | A1 | 12/2004 | Boyd et al. |
| 2005/0104376 | A1 | 5/2005 | Presby |
| 2007/0102354 | A1 | 5/2007 | Flournoy et al. |
| 2010/0163485 | A1 | 7/2010 | Pehrson et al. |

FOREIGN PATENT DOCUMENTS

| | | | |
|---|---|---|---|
| EP | 0346013 | A1 | 12/1989 |
| EP | 0695721 | A2 | 2/1996 |
| EP | 1340720 | A1 | 9/2003 |
| GB | 1498360 | | 1/1978 |
| WO | 8801197 | | 2/1988 |
| WO | 9111396 | A1 | 8/1991 |
| WO | 9603351 | A1 | 2/1996 |
| WO | 0198477 | A1 | 12/2001 |
| WO | 03051485 | A1 | 6/2003 |
| WO | 03068694 | A1 | 8/2003 |
| WO | 2006058097 | A1 | 6/2006 |

OTHER PUBLICATIONS

Pehrson et al., U.S. Appl. No. 12/752,658, filed Apr. 1, 2010.

Flournoy et al., U.S. Appl. No. 12/792,721, filed Jun. 2, 2010.

Brentwood Industries, Integrated Fixed Film/Activated Sludge (IFAS) Technology, article, Copyright Oct. 2001, pp. 1-6, Document 4.0, Brentwood Industries, Reading, PA.

David Krichten and Curtis McDowell, Simultaneous Nitrification and Denitrification in Biofilms of an Engineered Integrated Fixed-Film Activated Sludge (IFAS) System, article, pp. 1-4, Brentwood Industries, Reading, PA.

Diffuser Express a Division of Environmental Dynamics Inc., Catalog #105-2006, catalog, Date Unknown, pp. 1-30, Diffuser Express, Columbia, MO.

Emanuel P. Psaltakis, James Liubicich, Paul Pitt, Paul Antonio and Sole Posada of Hazen and Sawyer, P.C., Demonstration of Integrated Fixed Film Activated Sludge Process for BNR at the Mamaroneck WWTP, article, Copyright 2003, pp. 1-22, Water Environment Federation Technical Exhibition and Conference (WEFTEC) 2003, Water Environment Federation, Alexandria, VA.

Entex Technologies, Inc., BioWeb fixed media system, article, Copyright 2004, pp. 1-2, Entex Technologies, Inc., Chapel Hill, NC.

Entex Technologies, Inc., Internet website: (http://www.entexinc.com/Installations.htm), pp. 1-2, Entex Technologies, Inc., Chapel Hill, NC.

Flournoy et al., U.S. Appl. No. 11/552,778 (now abandoned), filed Oct. 25, 2006, Office Action dated Apr. 9, 2008.

Flournoy et al., U.S. Appl. No. 29/321,003 (now abandoned), filed Jul. 9, 2008, Office Action dated Dec. 1, 2008.

Flournoy et al., U.S. Appl. No. 29/321,003 (now abandoned), filed Jul. 9, 2008, Office Action dated May 18, 2009.

Flournoy et al., U.S. Appl. No. 29/363,301, filed Jun. 8, 2010.

Hydroxyl Systems Inc., Hydroxyl Systems Advanced Water and Wastewater Treatment, article, Copyright 2003, 66 pages, internet address http://hydroxyl.com/hydroxyl.html, Hydroxyl Systems Inc., Victoria, BC Canada.

Hydroxyl Systems Inc., The Hydroxyl—F3R Process innovative biological treatment technology, article, pp. 1-2, Hydroxyl Systems Inc., Sidney, BC Canada.

International Search Report mailed on Apr. 5, 2008 in PCT/US2005/042503.

International Search Report mailed on Feb. 23, 2007 in PCT/US2006/041818.

Pehrson et al., U.S. Appl. No. 11/284,792 (now U.S. Patent No. 7,445,715), filed Nov. 22, 2005, Office Action dated Jul. 11, 2007.

Pehrson et al., U.S. Appl. No. 11/284,792 (now U.S. Patent No. 7,445,715), filed Nov. 22, 2005, Office Action dated Feb. 13, 2008.

Pehrson et al., U.S. Appl. No. 12/250,053 (now U.S. Patent No. 7,691,262), filed Oct. 13, 2008, Office Action dated Apr. 2, 2009.

Pulsed Hydraulics, Inc., Variable "Speed" Tank Mixing With No In-basin Moving Parts, article, Copyright 2005, 8 pages, internet address http://phiwater.com/, Pulsed Hydraulics, Inc., Bellevue, WA.

Robert Zammataro, Andrew G. Lynn, P.E., Dee, Donald E. Maurer, P.E., Dee and Roderick D. Reardon, P.E., Dee, Upgrading a Contact Stabilization Treatment Plant to a Nitrifying Activated Sludge Process by Using Integrated Fixed-Film Activated Sludge (IFFAS) Media, paper, pp. 1-9, Date Unknown.

Sarah B. Hubbell and David J. Krichten of Brentwood Industries Inc., Demonstration and Full Scale Results of a Plant Upgrade for BNR Using Integrated Fixed-Film Activated Sludge (IFAS) Technology, article, Copyright 2004, pp. 1-8, Water Environment Federation Technical Exhibition and Conference (WEFTEC) 2004, New Orleans, Louisiana, Oct. 2-6, Water Environment Federation, Alexandria, VA.
Sarah B. Hubbell, Richard Pehrson and Andrew Schuler of Entex Technologies Inc., Eight Years of Successful Cold Weather Nitrification With Integrated Fixed-Film/Activated Sludge, paper, pp. 1-11, Proceedings of the Water Environment Federation Annual Conference (WEFTEC), Dallas, Texas, Oct. 22-25, 2006.
Sarah B. Hubbell, Richard Pehrson, and Wayne Flournoy, "Webitat Advanced IFAS System Addresses Common Fixed Media Concerns," Entex Technologies, Inc., date unknown.
Terry L. Johnson, Andrew Shaw, Heather Phillips, Nancy Choi, Thomas Lauro, Ralph Butler, and Leah Radko, A Pilot-Scale Comparison of IFAS and MBBR to Achieve Very Low Total Nitrogen Concentrations, article, Copyright 2007, pp. 1-14, vol. 1, No. 5, Water Environment Federation, Alexandria, VA.
United States Environmental Protection Agency, Fine Pore (Fine Bubble) Aeration Systems, Summary Report, Oct. 1985, pp. 1-50, EPA/625/8-85/010, EPA Water Engineering Research Laboratory, Cincinnati, Ohio.
United States Environmental Protection Agency, Fine Pore Aeration Systems, Design Manual, Sep. 1989, pp. 1-305, EPA/625/1-89-023, EPA Center for Environmental Research Information, Cincinnati, Ohio.
United States Environmental Protection Agency, Jeremiah J. McCarthy, Technology Assessment of Fine Bubble Aerators, report, Feb. 1982, pp. 1-48, EPA/600/2-82/003, USEPA Municipal Environmental Research Laboratory, Cincinnati, Ohio.
USFilter, Integrated Headworks Systems, article, Copyright 2000, pp. 1-12, LB-HW-BR-1000, USFilter, Chalfont, PA.
Water Environment & Technology, David R. Jackson, Leonard E. Ripley, Tod Maurina and Sarah Hubbell, Up to the Challenge IFAS Helps Growing Texas City Meet Discharge Limits, Expand Capacity, magazine, Nov. 2007, pp. 51-55, Water Environment & Technology.
Water Environment & Technology, Terry L. Johnson, Cindy Wallis-Lage, Andrew R. Shaw and Jim McQuarrie, IFAS Options Which One is Right for Your Project?, magazine, Nov. 2005, pp. 18-22, Water Environment & Technology.
Written Opinion mailed on Apr. 5, 2008 in PCT/US2005/042503.
Written Opinion of the International Searching Authority mailed on Feb. 23, 2007 in PCT/US2006/041818.

Figure 1

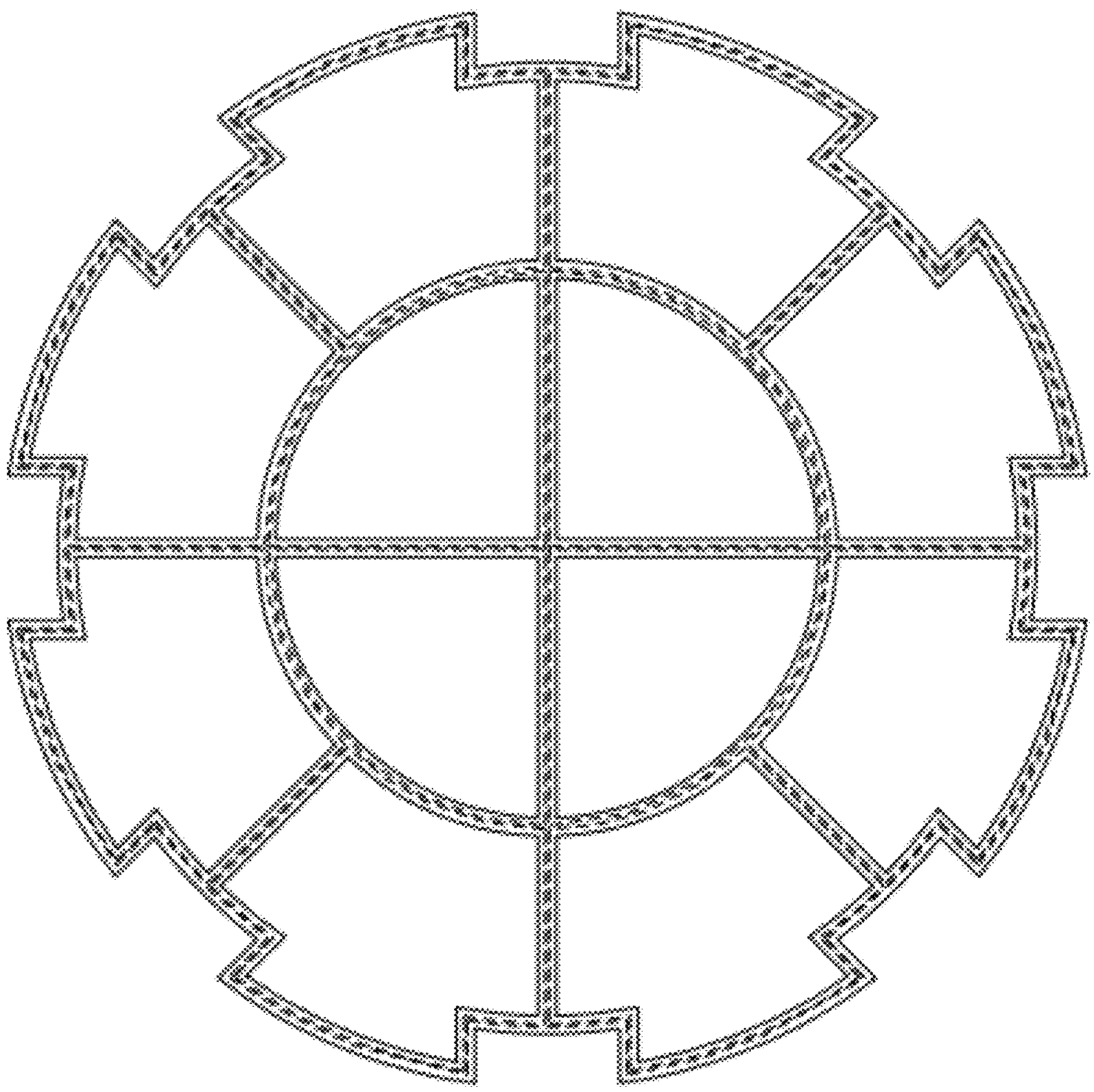

Figure 2

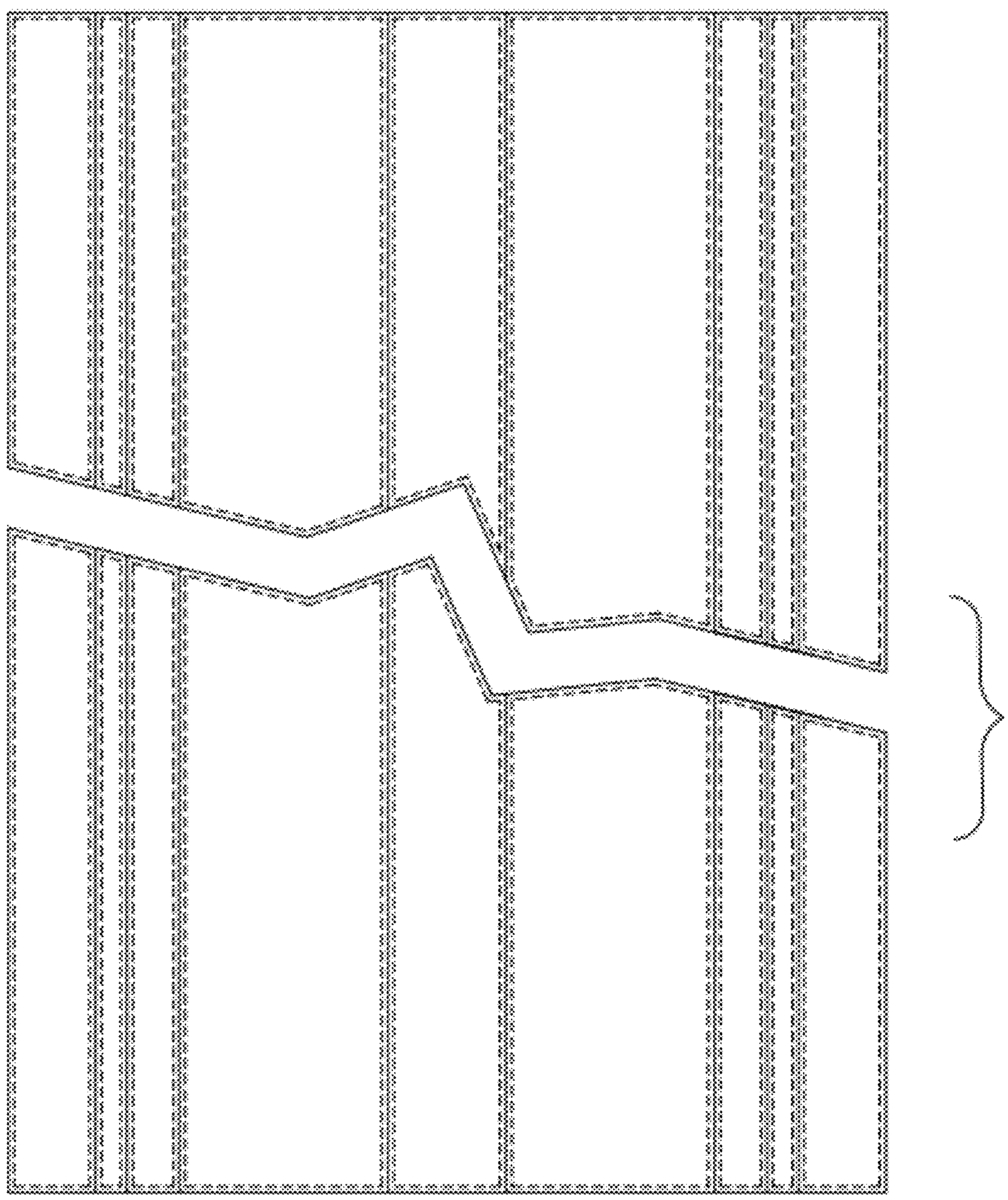
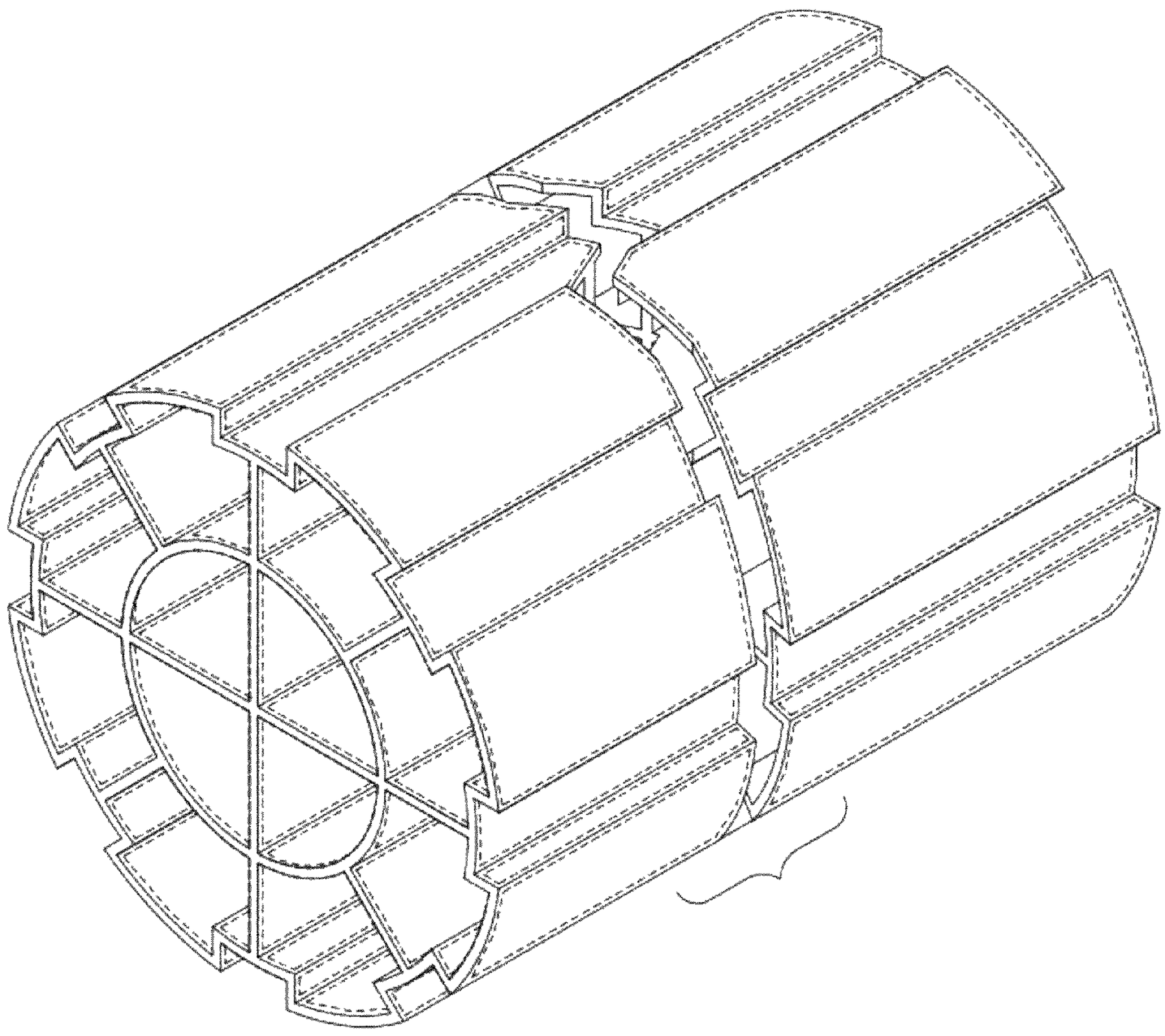
Figure 3