US00D670986S

(12) United States Design Patent

Somers, III

(10) Patent No.: US D670,986 S
(45) Date of Patent: ** Nov. 20, 2012

(54) **HANDLE FOR A NON-CONTINUOUS FLOW DRYWALL FINISHING TOOL**

(76) Inventor: **Charles C. Somers, III**, Snellville, GA (US)

(**) Term: **14 Years**

(21) Appl. No.: **29/380,219**

(22) Filed: **Dec. 1, 2010**

(51) **LOC (9) Cl.** **08-05**
(52) **U.S. Cl.** **D8/45**; D8/107
(58) **Field of Classification Search** D8/14, D8/45, 107; D25/119, 122, 124; 81/489; 401/51; 425/87
See application file for complete search history.

(56) **References Cited**

U.S. PATENT DOCUMENTS

D273,359	S		4/1984	Kolonia
5,009,730	A	*	4/1991	Tozier 156/85
5,088,733	A		2/1992	Barnea et al.
D375,243	S		11/1996	Hasegawa
D380,363	S		7/1997	Macor
D383,049	S		9/1997	Concari et al.
D387,649	S		12/1997	Concari et al.
D389,014	S		1/1998	Hasegawa
D398,463	S	*	9/1998	Olson D6/491
5,882,691	A	*	3/1999	Conboy 425/87
5,896,620	A		4/1999	Mink
D422,869	S		4/2000	Chen
6,099,203	A	*	8/2000	Landes 404/10
6,158,307	A		12/2000	Lamond et al.
D494,444	S		8/2004	Hung
D495,934	S	*	9/2004	Lin D8/10
D499,886	S		12/2004	Goulet et al.
D503,645	S	*	4/2005	Wirth et al. D10/114.9
6,889,405	B2		5/2005	Ritrovato et al.
D508,570	S	*	8/2005	Bouic D25/121
D513,580	S		1/2006	Lin
D535,539	S		1/2007	Chen
D540,636	S	*	4/2007	Donner et al. D8/61
D553,465	S		10/2007	Ping
D558,444	S	*	1/2008	Ma D3/6
D577,564	S		9/2008	Wu
D581,766	S		12/2008	Heneen et al.

(Continued)

Primary Examiner — Susan E Krakower
Assistant Examiner — Roselynne Cody
(74) *Attorney, Agent, or Firm* — Arnall Golden Gregory LLP; R. Stevan Coursey, Esq.

(57) **CLAIM**

The ornamental design of a handle for a non-continuous flow drywall finishing tool, as shown and described.

DESCRIPTION

FIG. **1** is a right side perspective view of my handle for a non-continuous flow drywall finishing tool according to my new design;
FIG. **2** is a first end elevational view of the handle for a non-continuous flow drywall finishing tool with a bore therein extending the length thereof according to my new design;
FIG. **3** is a second end elevational view of the handle for a non-continuous flow drywall finishing tool according to my new design;
FIG. **4** is a left side elevational view of the handle for a non-continuous flow drywall finishing tool according to my new design;
FIG. **5** is a right side elevational view of the handle for a non-continuous flow drywall finishing tool according to my new design;
FIG. **6** is a top plan view of the handle for a non-continuous flow drywall finishing tool according to my new design; and,
FIG. **7** is a bottom plan view of the handle for a non-continuous flow drywall finishing tool according to my new design. The handle is broken near the center to indicate indeterminate length.

1 Claim, 2 Drawing Sheets

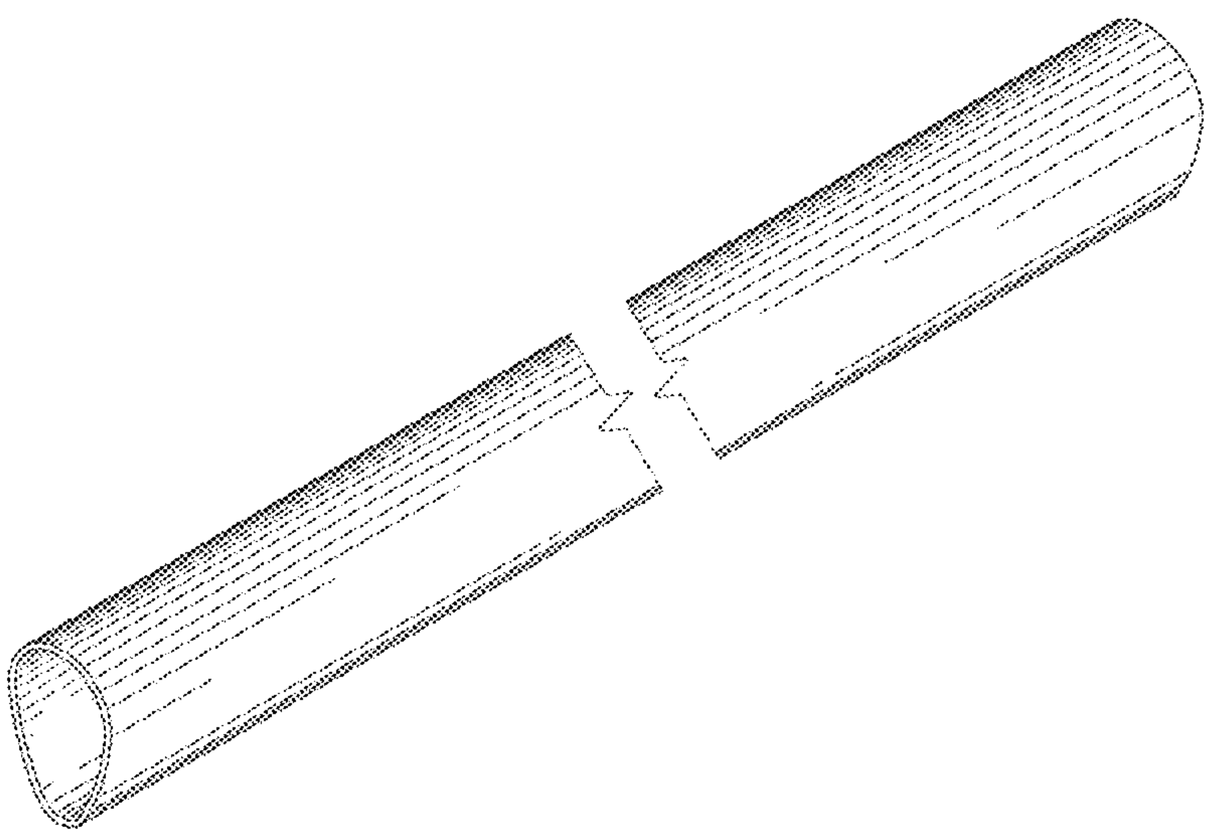

U.S. PATENT DOCUMENTS

D603,241	S *	11/2009	Pearce	D8/107
7,628,295	B2 *	12/2009	Mondloch et al.	222/397
7,779,851	B2 *	8/2010	Mallookis et al.	135/114
7,806,613	B2 *	10/2010	Mondloch et al.	401/48
D659,195	S *	5/2012	Boltz et al.	D20/43
2001/0003563	A1 *	6/2001	Schauer et al.	401/5
2003/0072830	A1 *	4/2003	Conboy et al.	425/87
2004/0154525	A1 *	8/2004	Wirth et al.	116/1
2005/0100386	A1 *	5/2005	Murray	401/5
2005/0155187	A1	7/2005	Ritrovato et al.	
2005/0184541	A1 *	8/2005	Grizzle	294/19.1
2010/0260879	A1 *	10/2010	Schlecht et al.	425/87

* cited by examiner

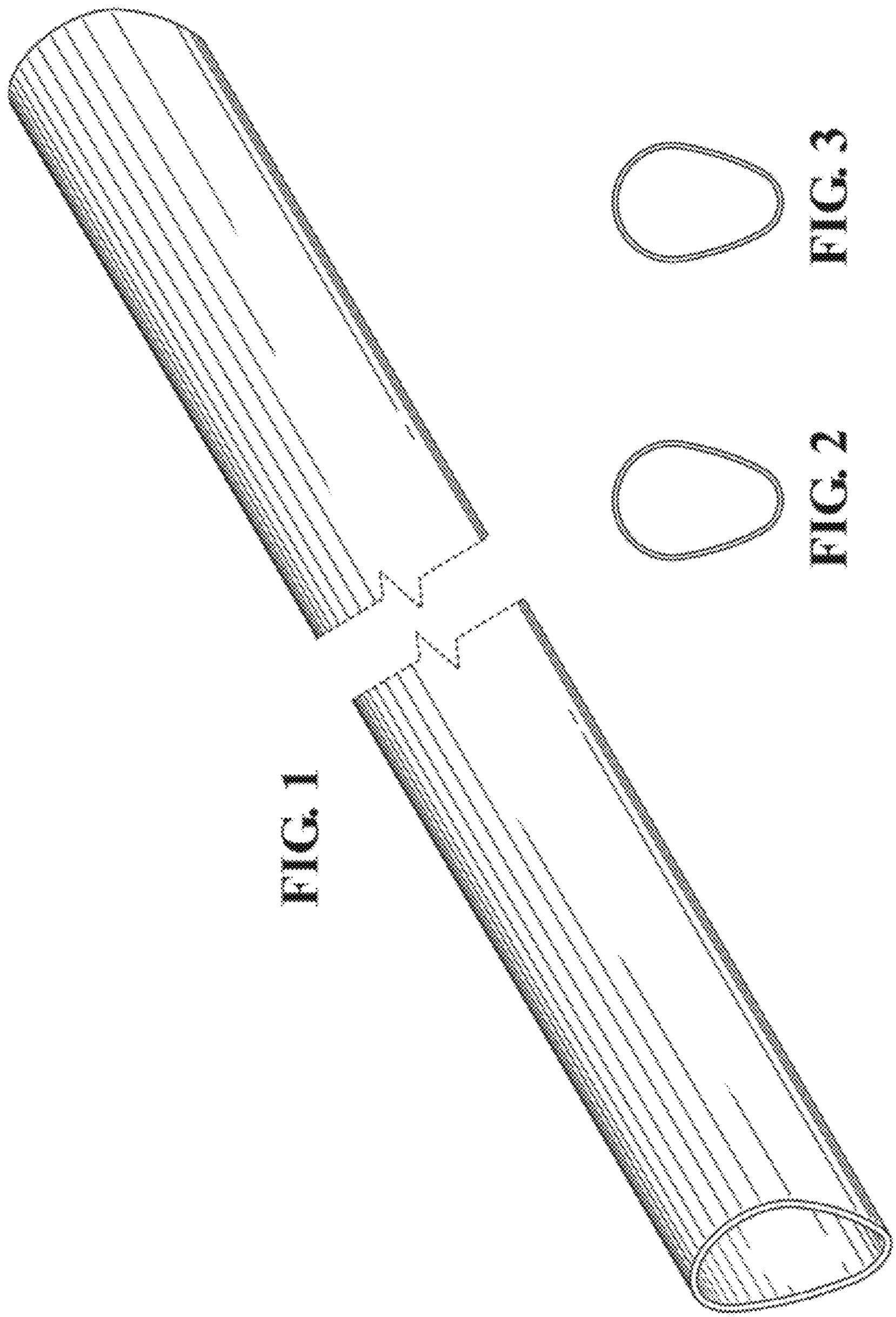

FIG. 1

FIG. 2

FIG. 3

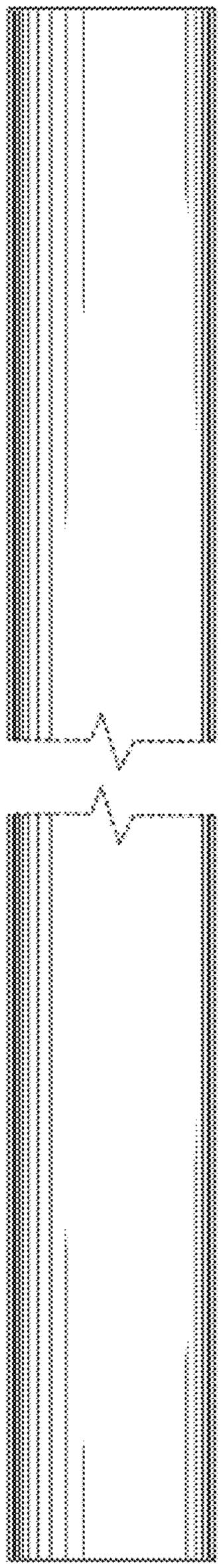

FIG. 4

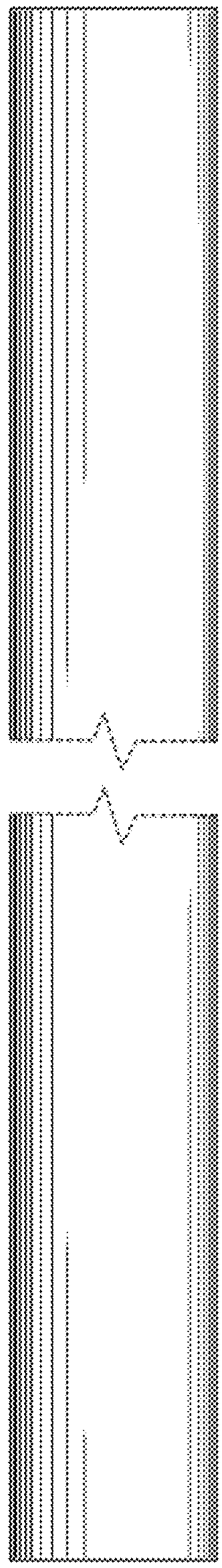

FIG. 5

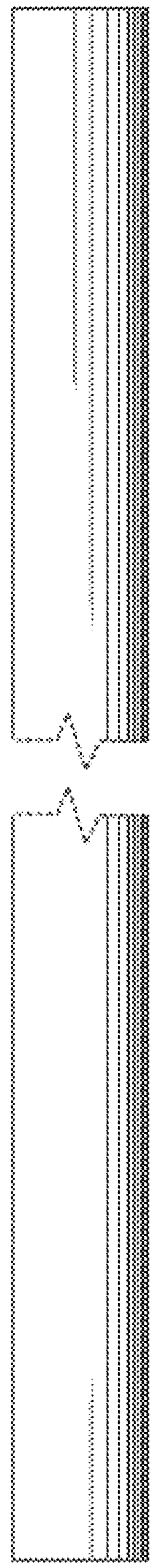

FIG. 6

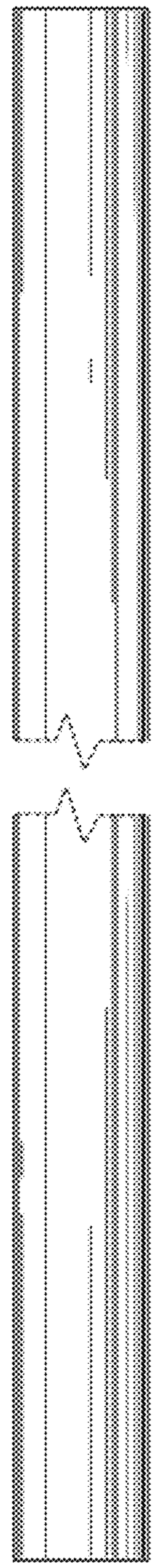

FIG. 7