US00D670948S

(12) United States Design Patent
Price

(10) **Patent No.: US D670,948 S**
(45) **Date of Patent: ** Nov. 20, 2012**

(54) **BORDER FOR MATTRESSES**

(75) Inventor: **Elvin C. Price**, Dacula, GA (US)

(73) Assignee: **Atlanta Attachment Company**, Lawrenceville, GA (US)

(**) Term: **14 Years**

(21) Appl. No.: **29/419,255**

(22) Filed: **Apr. 26, 2012**

(51) **LOC (9) Cl.** **06-09**
(52) **U.S. Cl.** **D6/605**
(58) **Field of Classification Search** D6/595, D6/596, 601, 604, 605; 5/690, 703, 704, 5/716, 717, 739, 740, 657.5, 675, 680, 688, 5/700, 706, 737, 499
See application file for complete search history.

(56) **References Cited**

U.S. PATENT DOCUMENTS

1,355,729	A	*	10/1920	Bennett	5/739
1,413,577	A	*	4/1922	Eldredge	5/739
1,762,106	A	*	6/1930	Pittoni	5/739
1,892,203	A	*	12/1932	Burton et al.	5/717
2,200,011	A	*	5/1940	Riley	5/716
2,229,385	A	*	1/1941	Munson et al.	112/475.01
2,611,910	A	*	9/1952	Bell	267/91
2,975,437	A	*	3/1961	Freeman	5/716
4,554,693	A		11/1985	Calloway	
6,640,362	B1		11/2003	Kimball	
D551,011	S		9/2007	Van Patten	
D551,012	S		9/2007	Van Patten	
D552,397	S		10/2007	Van Patten	
D622,088	S		8/2010	Morrison	
D622,531	S		8/2010	Morrison et al.	
D633,322	S		3/2011	Morrison	
D640,082	S		6/2011	Morrison	
D642,413	S		8/2011	Rinehart	
D651,443	S		1/2012	Wightman	
D659,459	S		5/2012	Jung et al.	
D662,751	S		7/2012	Morrison et al.	

* cited by examiner

Primary Examiner — Janice Seeger

(74) *Attorney, Agent, or Firm* — Womble Carlyle Sandridge & Rice LLP

(57) **CLAIM**

The ornamental design for a border for mattresses, as shown and described.

DESCRIPTION

FIG. **1** is a front perspective view of a border for mattresses showing my new design in accordance with a first embodiment.
FIG. **2** is a left elevation view of the border for mattresses of FIG. **1**.
FIG. **3** is a right elevation view of the border for mattresses of FIG. **1**.
FIG. **4** is a rear elevation view of the border for mattresses of FIG. **1**.
FIG. **5** is a front elevation view of the border for mattresses of FIG. **1**.
FIG. **6** is a top plan view of the border for mattresses of FIG. **1**, which is identical to the opposite, bottom plan view of the border for mattresses of FIG. **1**.
FIG. **7** is an enlarged view of a corner of the border for mattresses and is illustrative of a portion of each of FIGS. **1-5** showing the design shown in closer detail.
FIG. **8** is a perspective view of a border for mattresses showing my new design in accordance with a second embodiment.
FIG. **9** is a left elevation view of the border for mattresses of FIG. **8**.
FIG. **10** is a right elevation view of the border for mattresses of FIG. **8**.
FIG. **11** is a rear elevation view of the border for mattresses of FIG. **8**.
FIG. **12** is a front elevation view of the border for mattresses of FIG. **8**.
FIG. **13** is a top plan view of the border for mattresses of FIG. **8**, which is identical to the opposite, bottom view of the border for mattresses.
FIG. **14** is a perspective view of a border for mattresses showing my new design in accordance with a third embodiment.
FIG. **15** is a left elevation view of the border for mattresses of FIG. **14**.

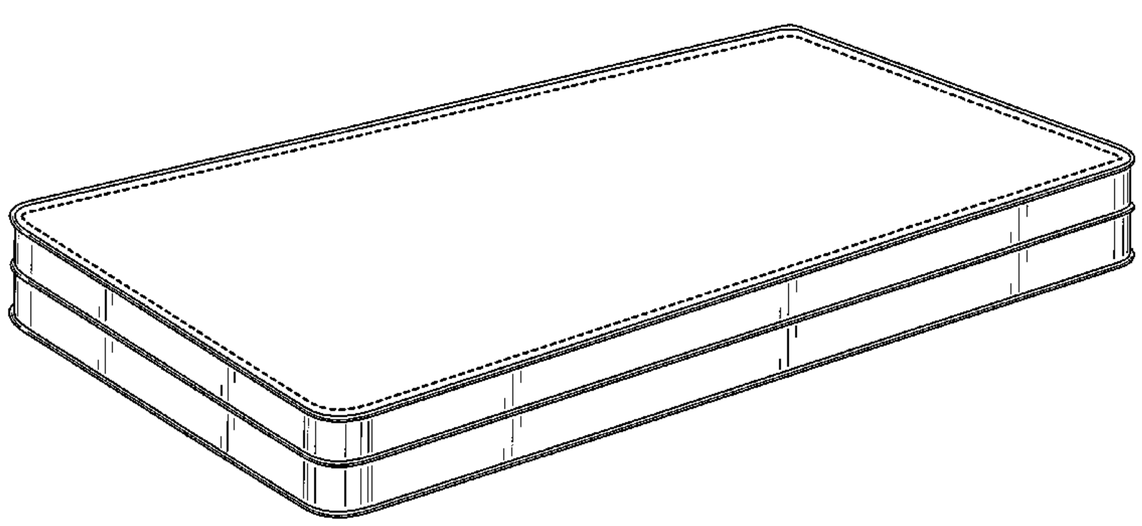

FIG. **16** is a right elevation view of the border for mattresses of FIG. **14**.
FIG. **17** is a rear elevation view of the border for mattresses of FIG. **14**.
FIG. **18** is a front elevation view of the border for mattresses of FIG. **14**.
FIG. **19** is a top plan view of the border for mattresses of FIG. **14**, which is identical to the opposite, bottom plan view of the border for mattresses of FIG. **14**.
FIG. **20** is a perspective view of a border for mattresses showing my new design in accordance with a fourth embodiment.
FIG. **21** is a left elevation view of the border for mattresses of FIG. **20**.
FIG. **22** is a right elevation view of the border for mattresses of FIG. **20**.
FIG. **23** is a rear elevation view of the border for mattresses of FIG. **20**.
FIG. **24** is a front elevation view of the border for mattresses of FIG. **20**; and,
FIG. **25** is a top plan view of the border for mattresses of FIG. **20**, which is identical to the opposite, bottom plan view of the border for mattresses of FIG. **20**.
The broken lines shown in the drawings are for environmental purposes only and form no part of the claimed design. The areas encompassed by the broken lines form no part of the claimed design.

1 Claim, 17 Drawing Sheets

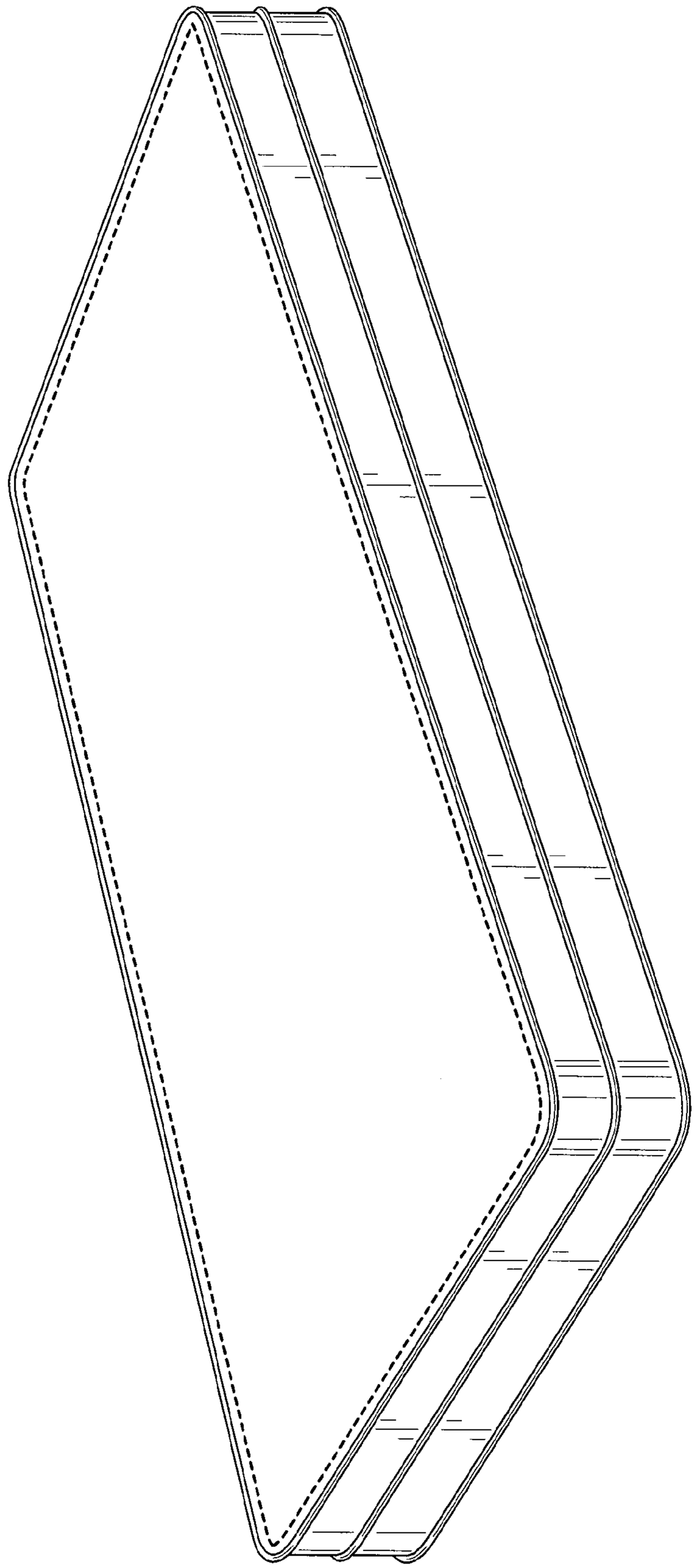

FIG. 1

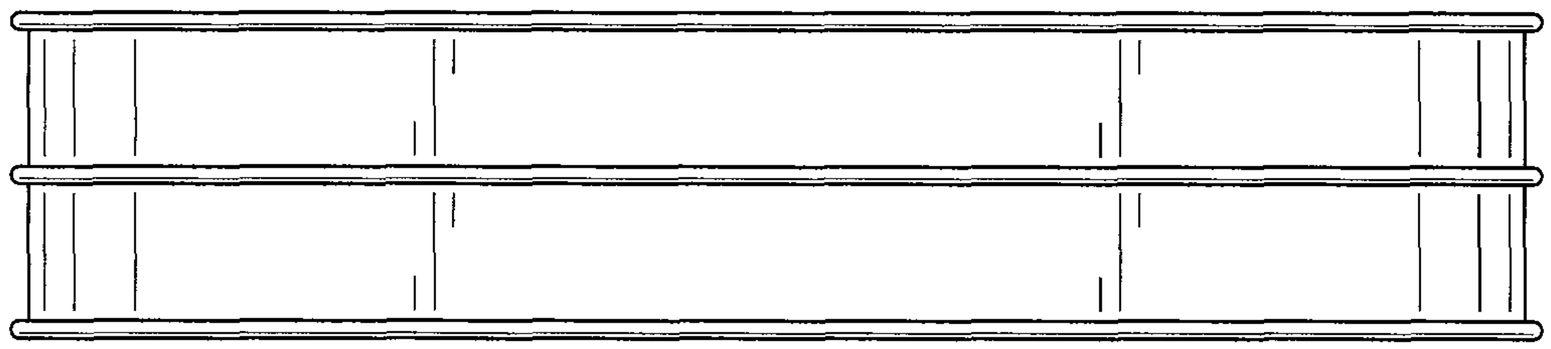

FIG. 2

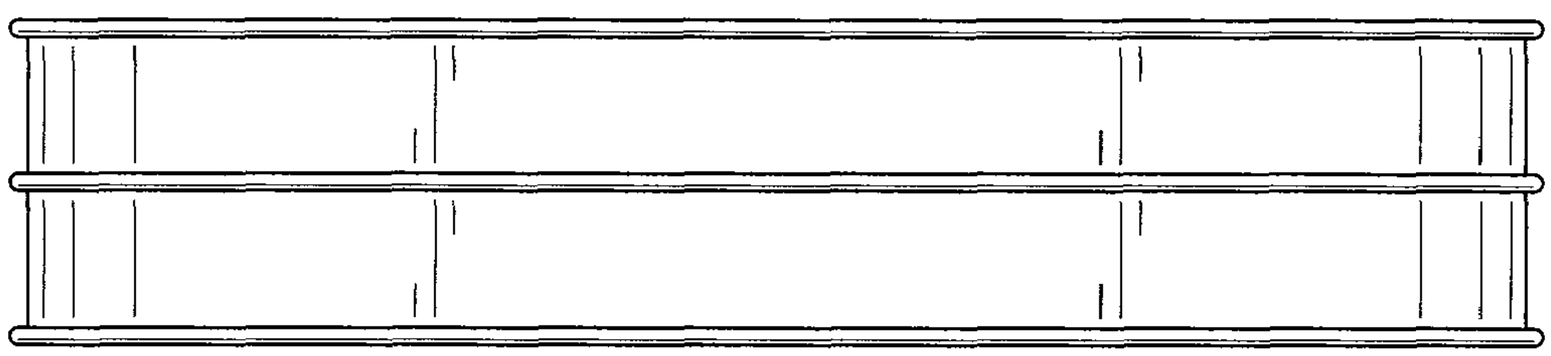

FIG. 3

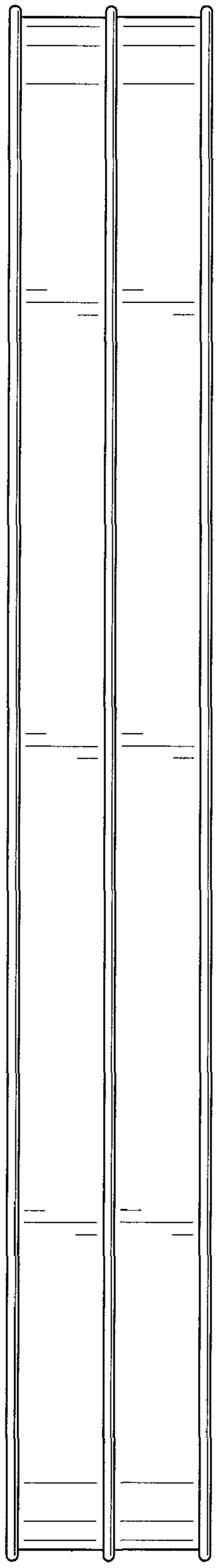

FIG. 4

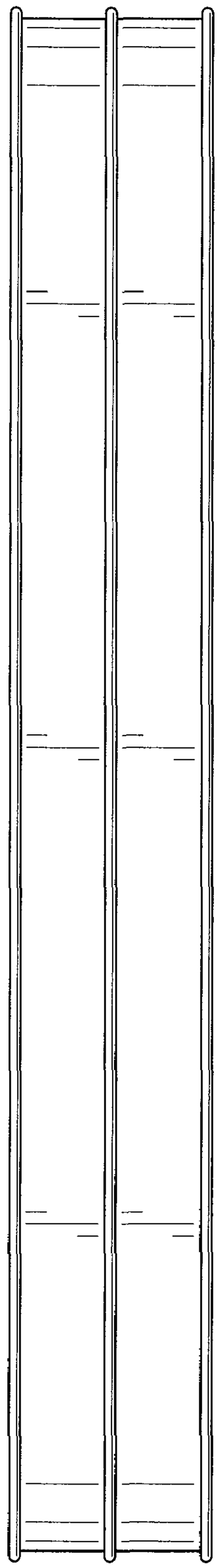

FIG. 5

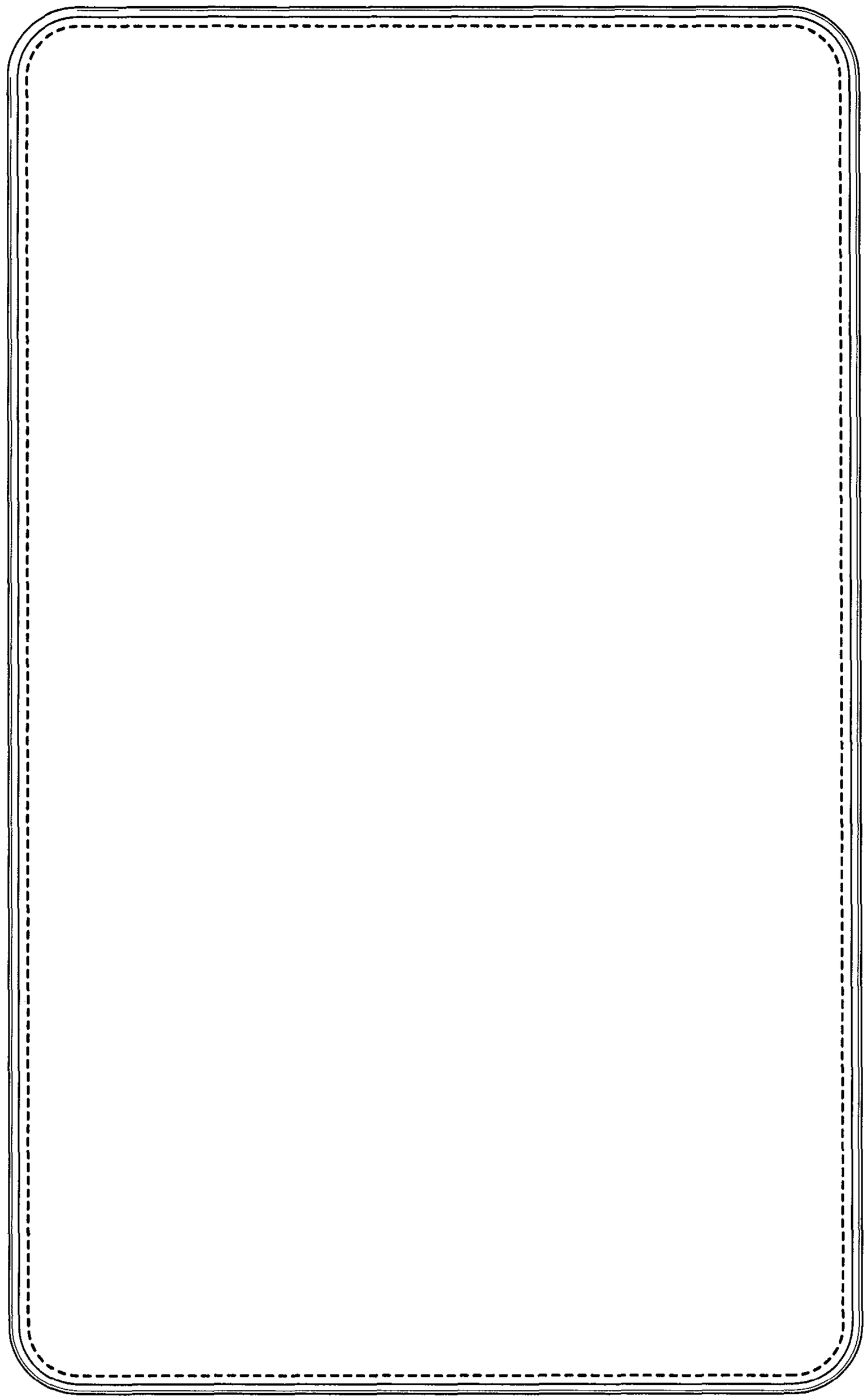

FIG. 6

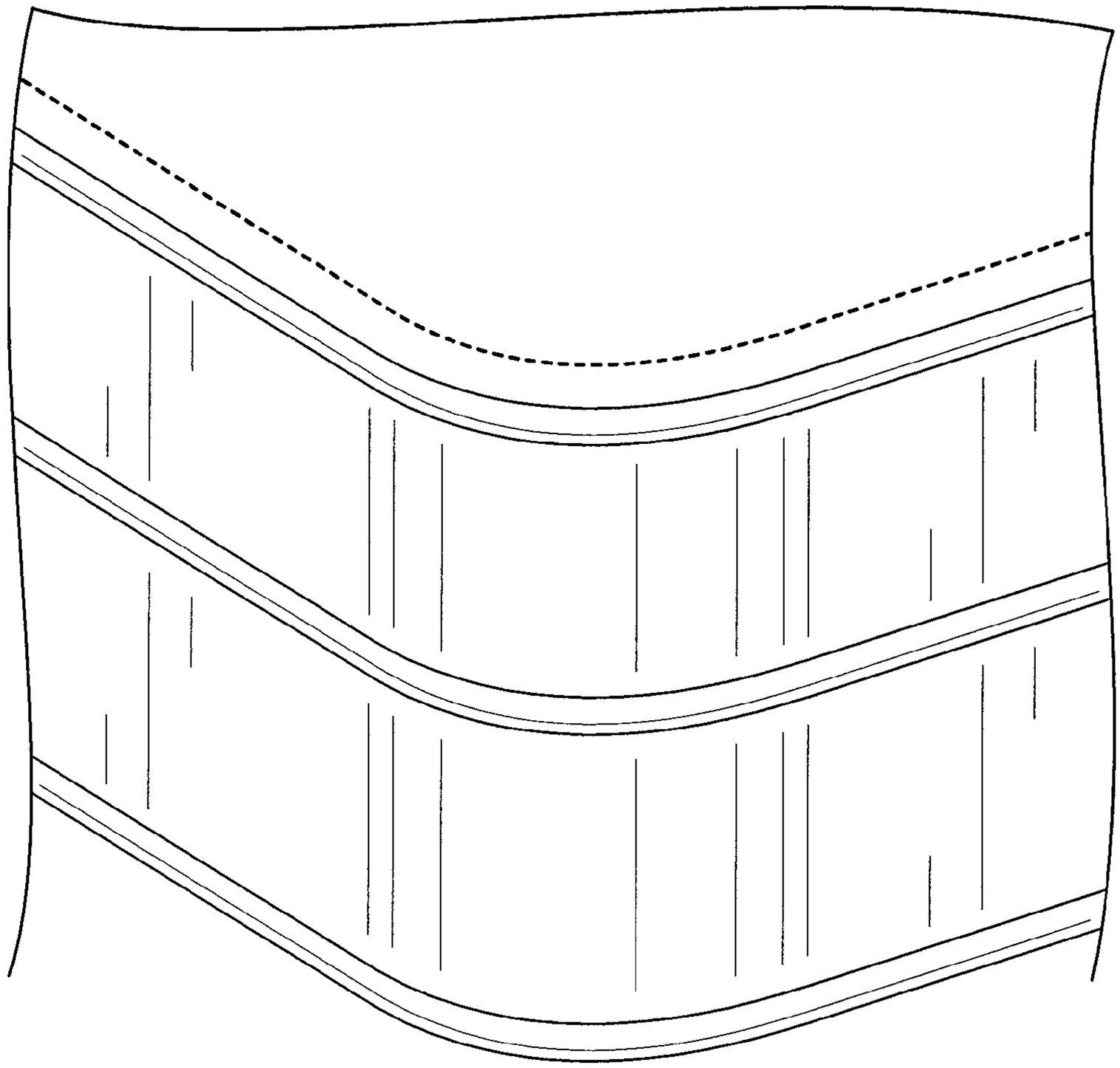

FIG. 7

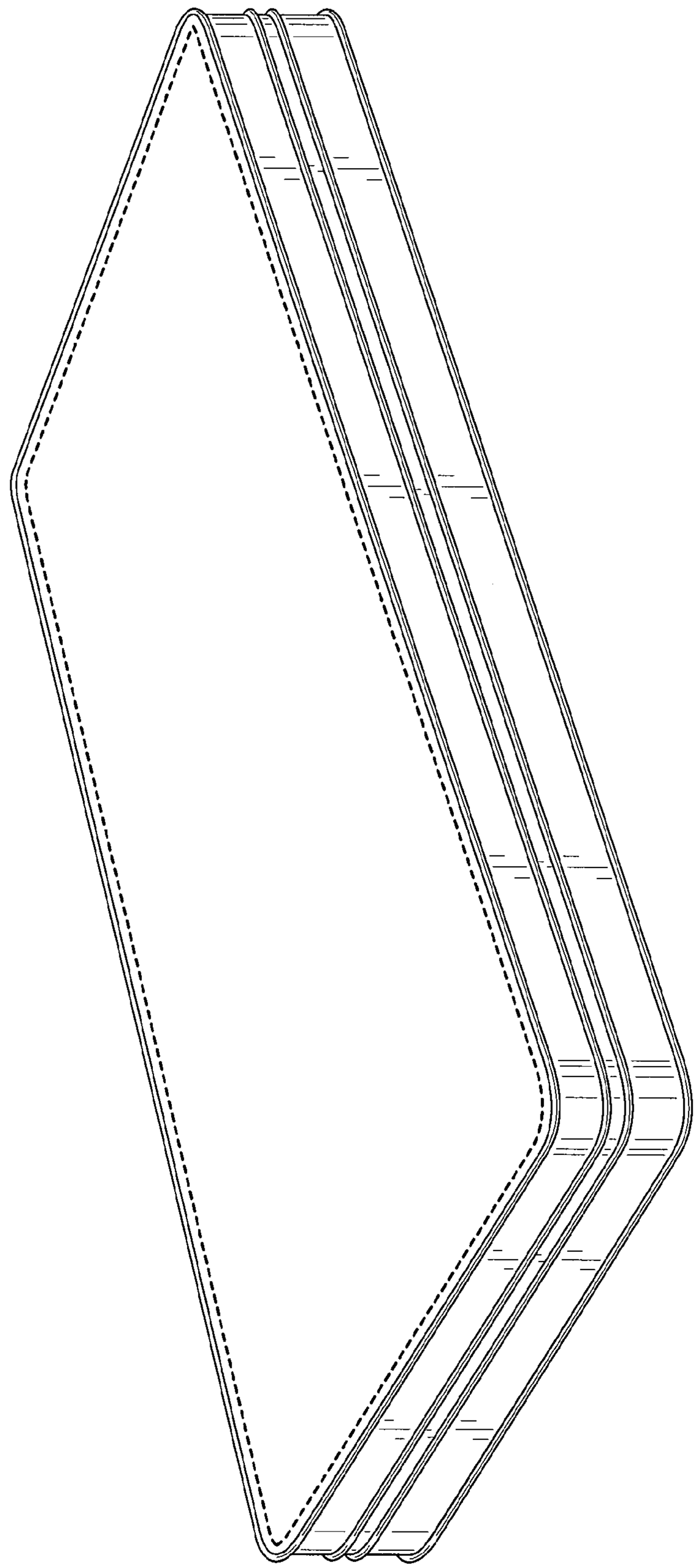

FIG. 8

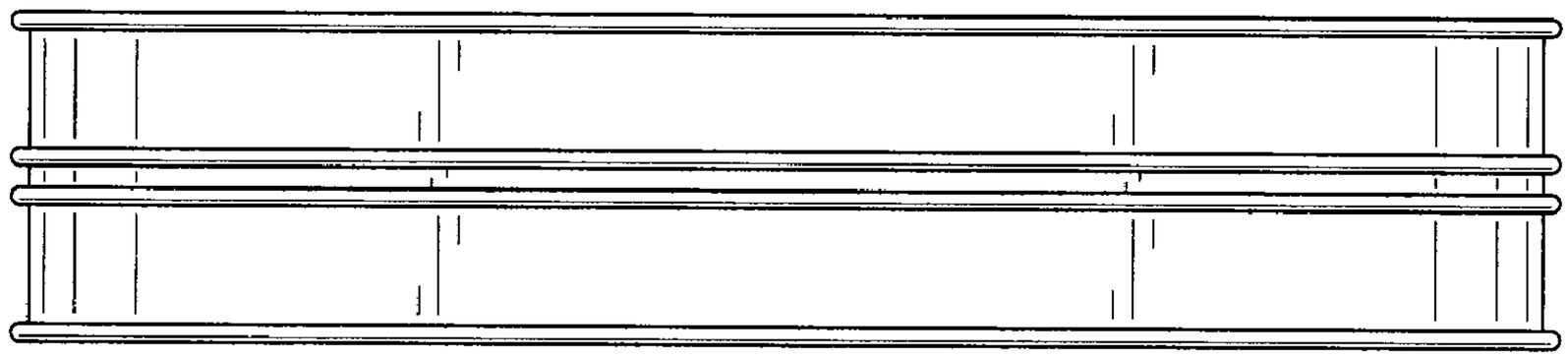

FIG. 9

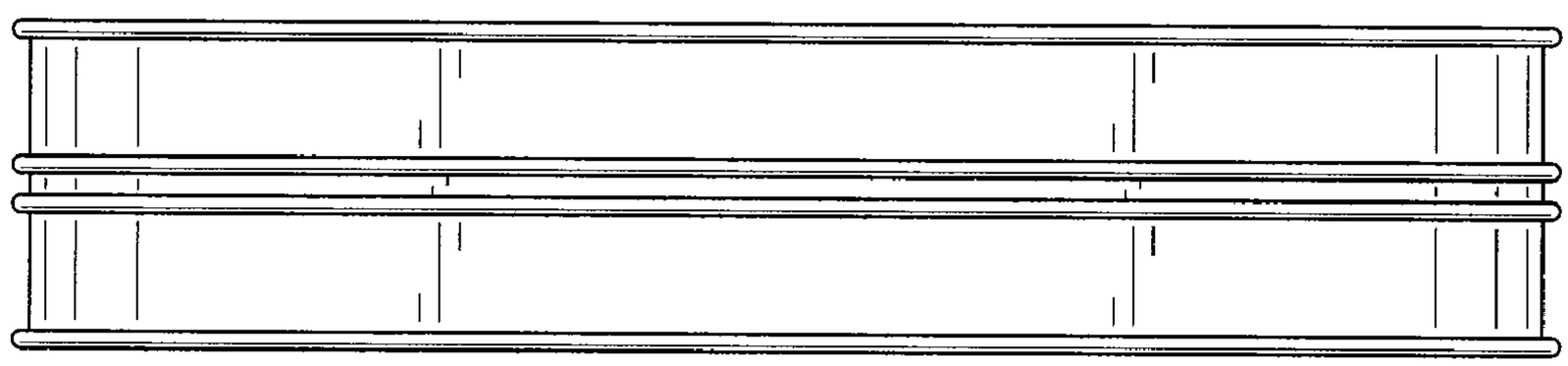

FIG. 10

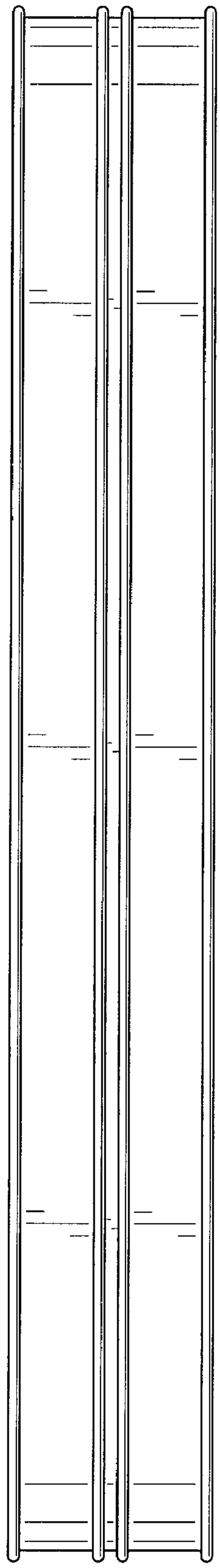

FIG. 11

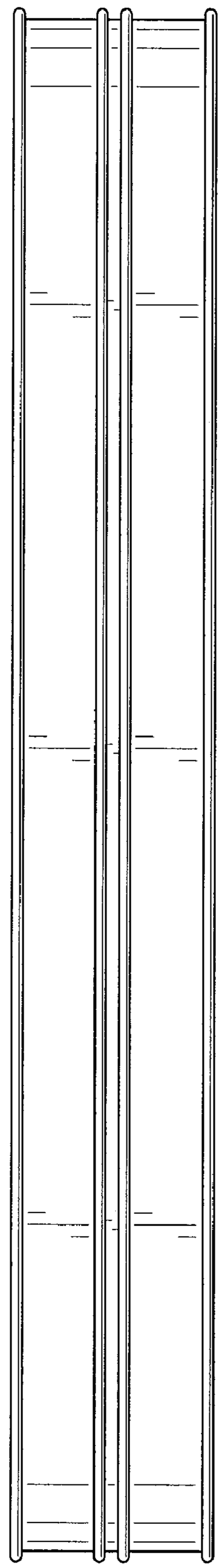

FIG. 12

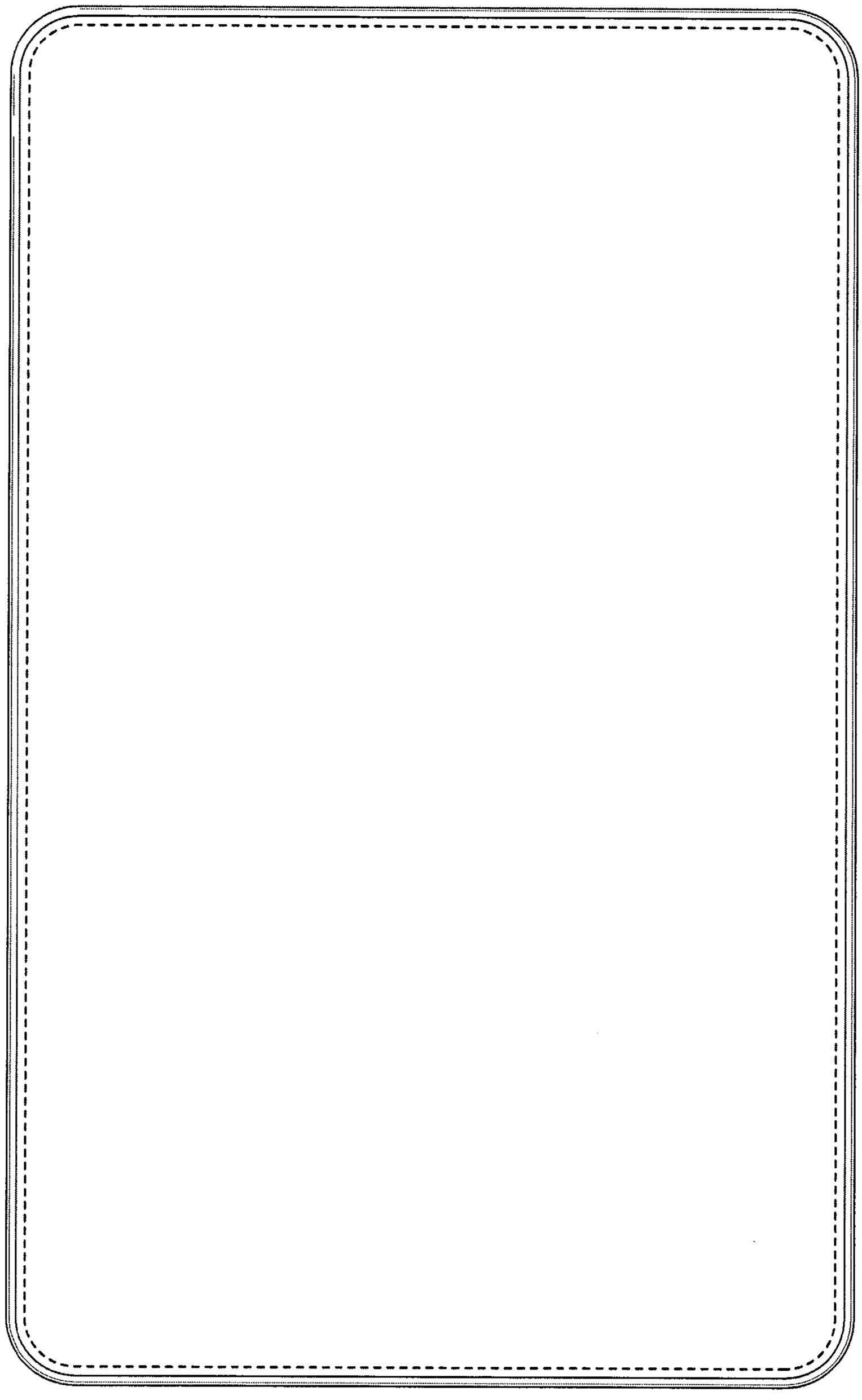

FIG. 13

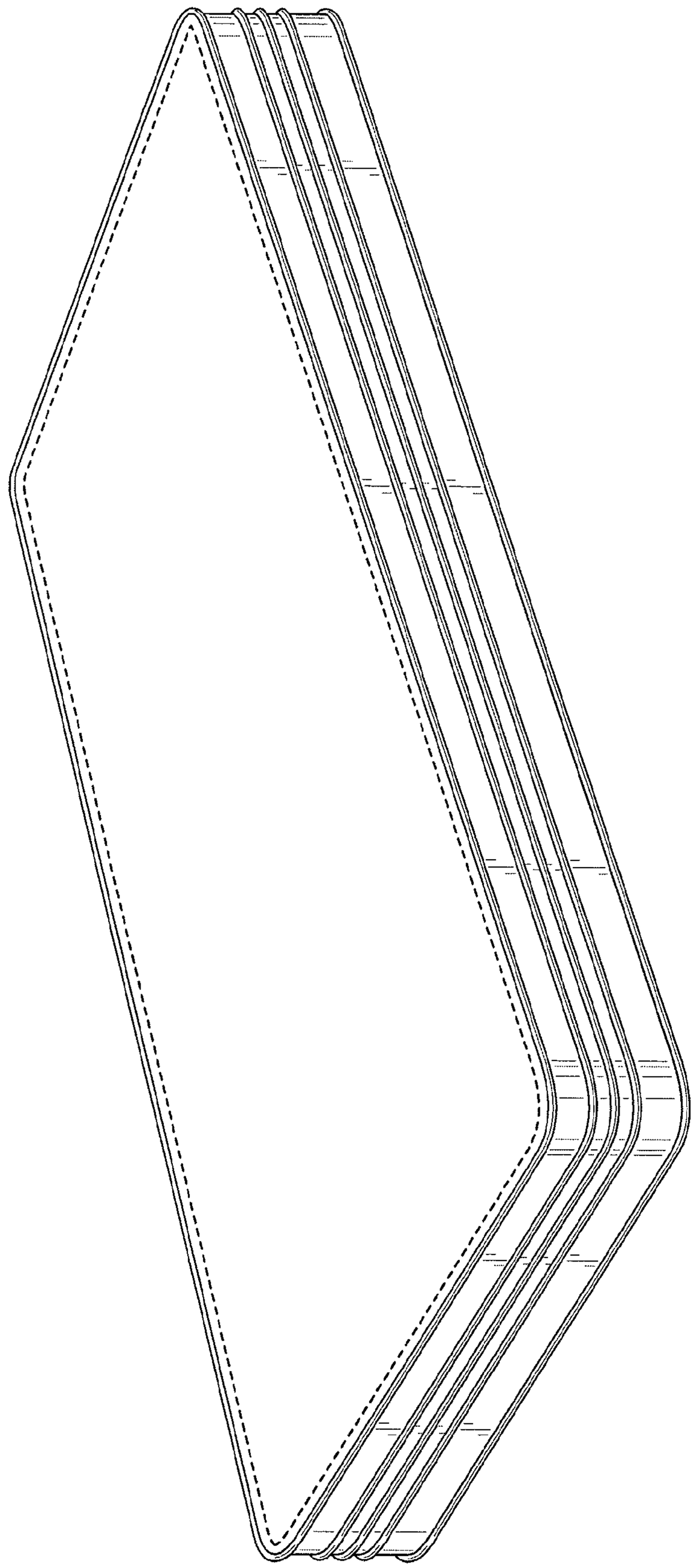

FIG. 14

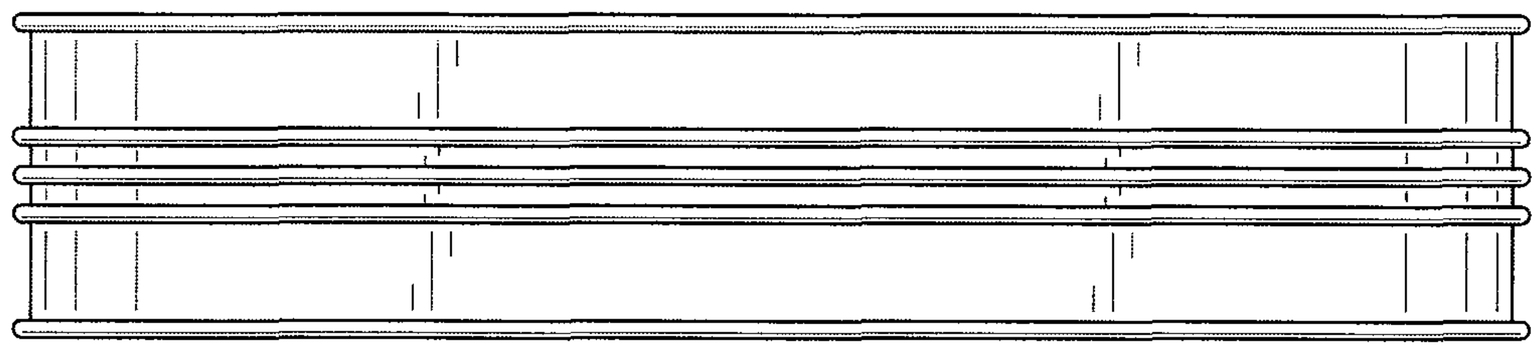

FIG. 15

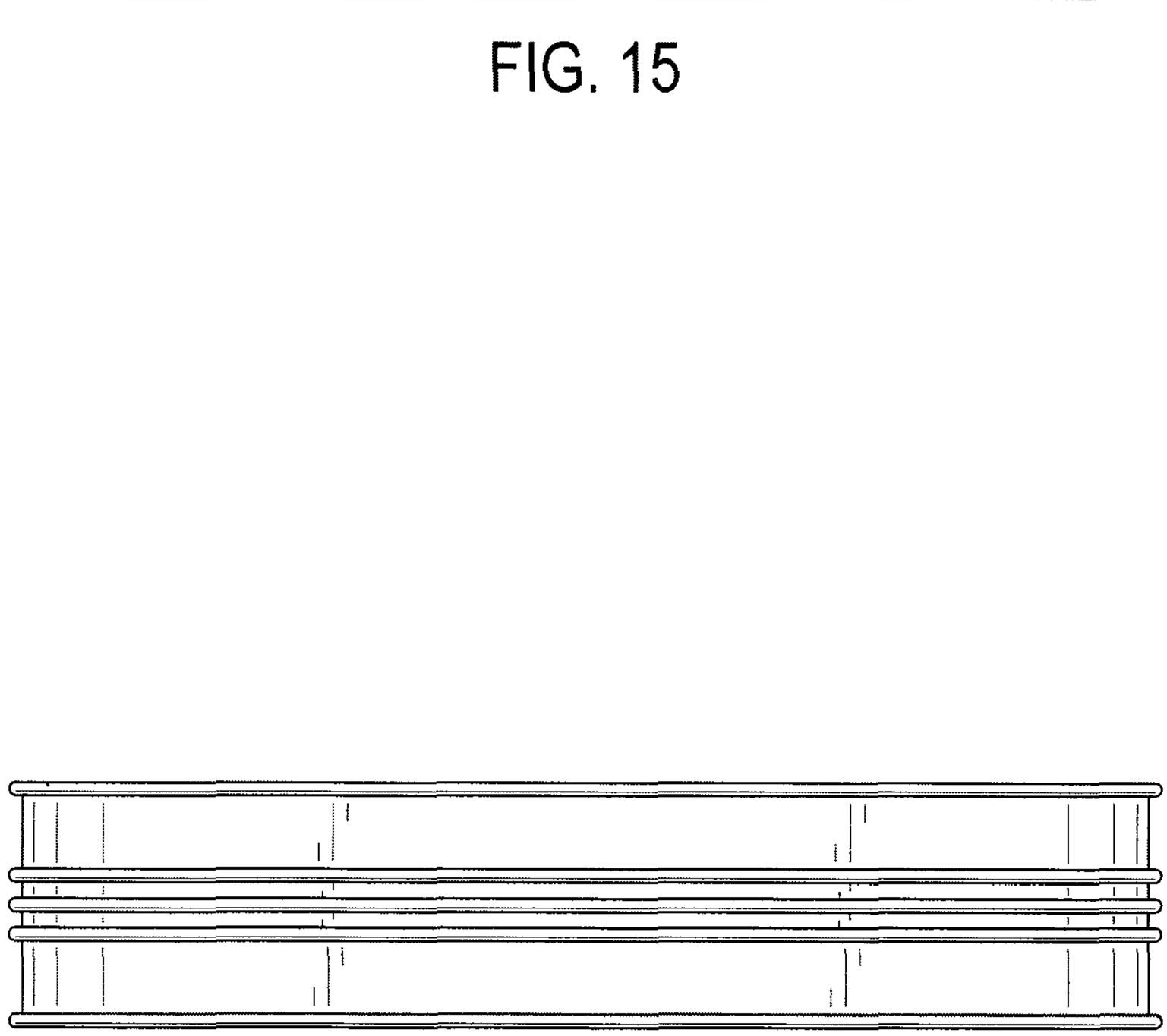

FIG. 16

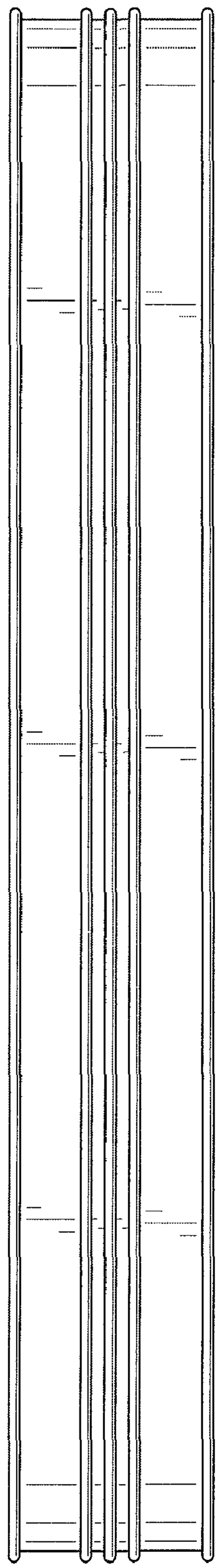

FIG. 17

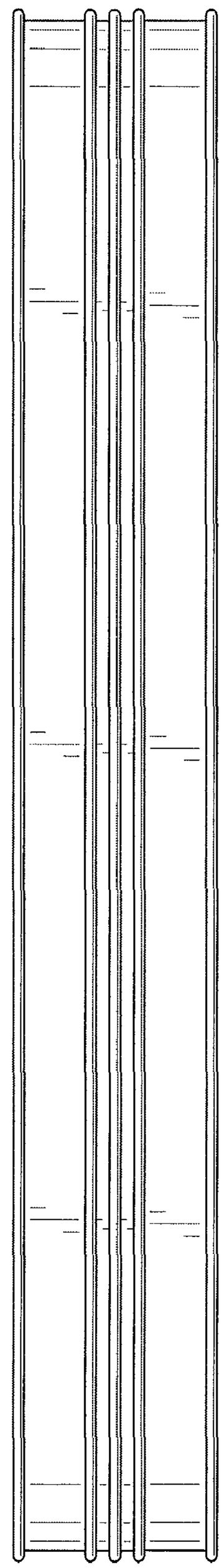

FIG. 18

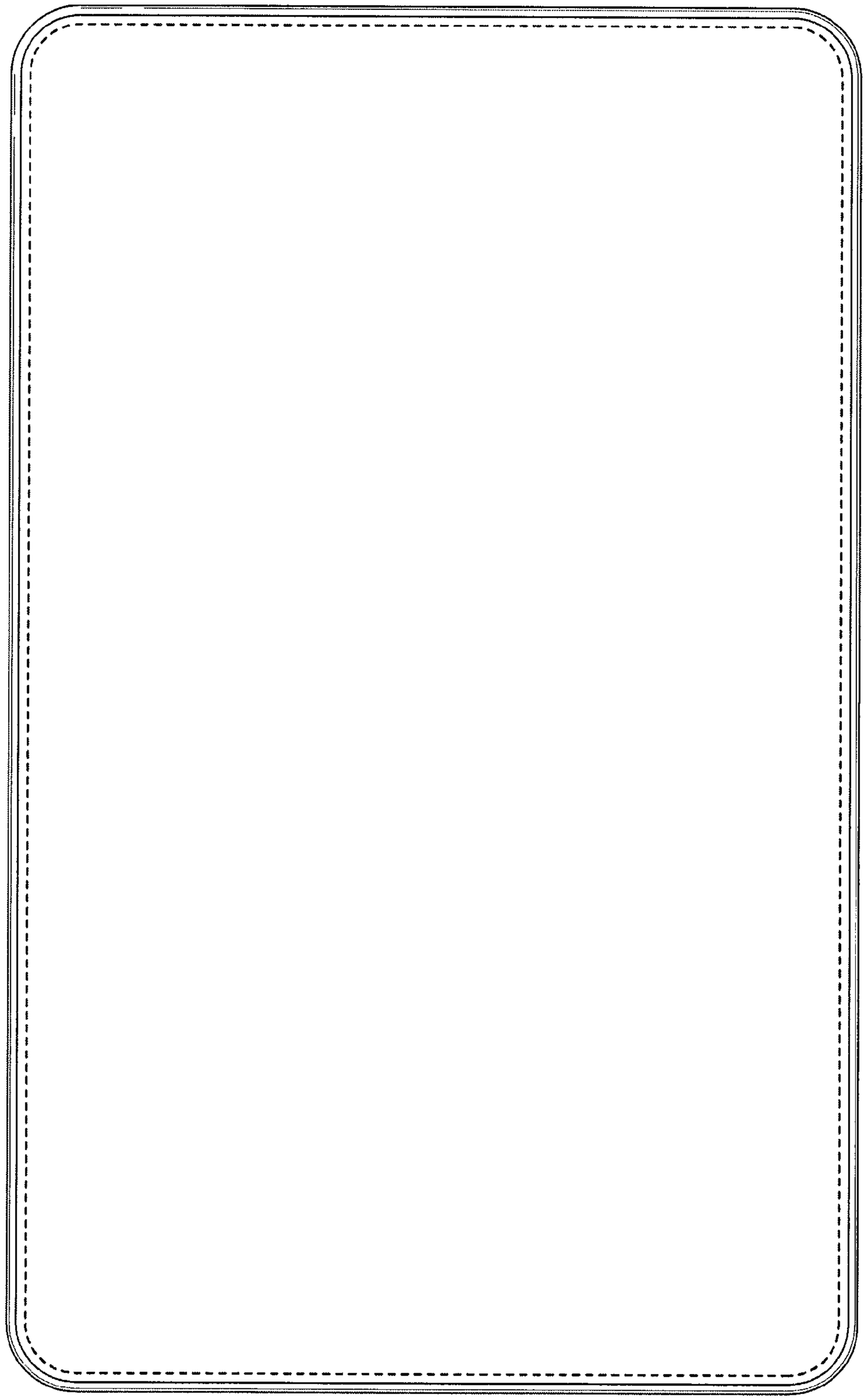

FIG. 19

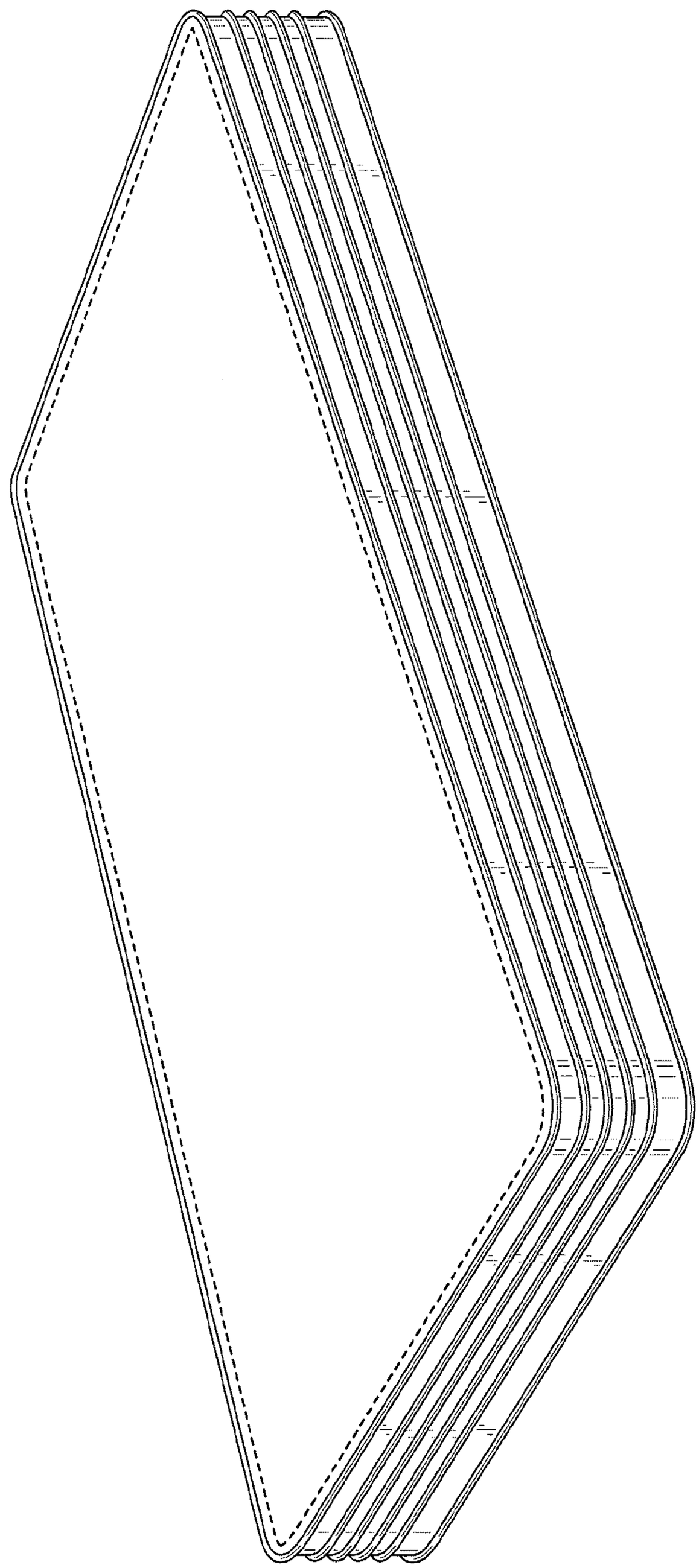

FIG. 20

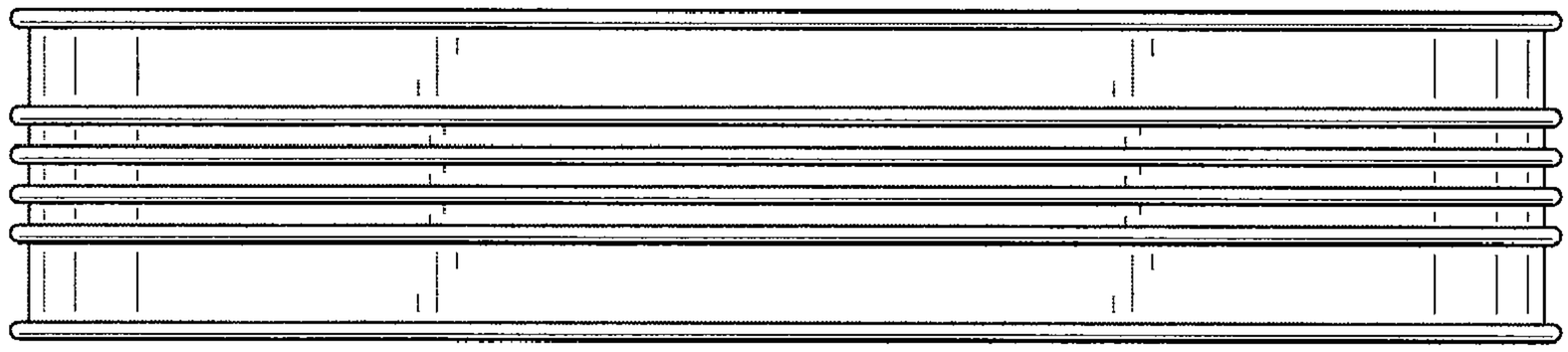

FIG. 21

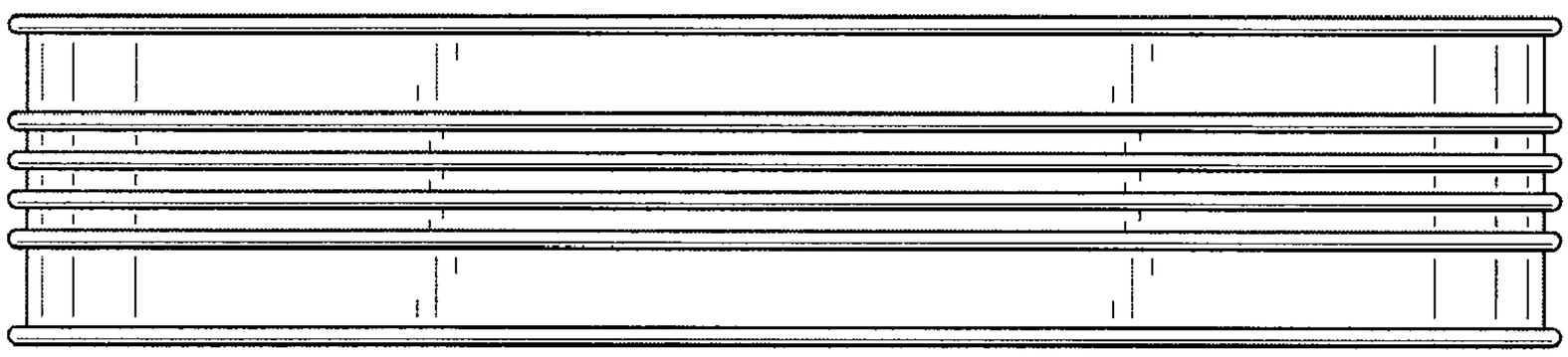

FIG. 22

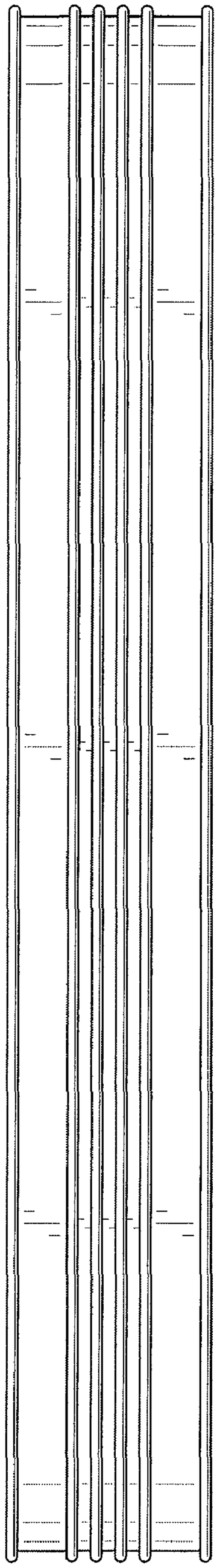

FIG. 23

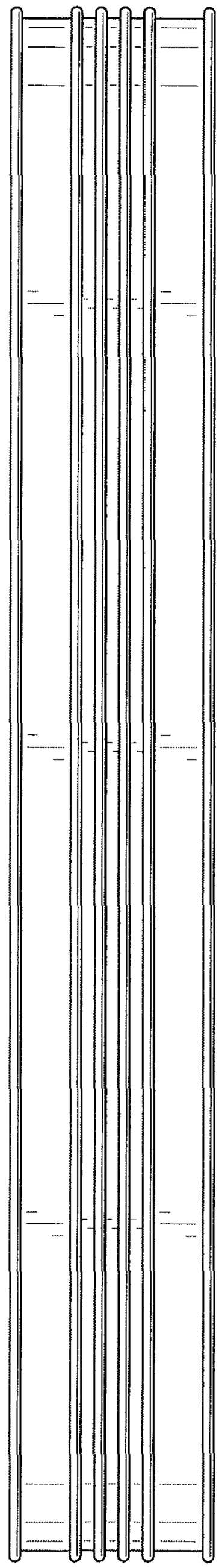

FIG. 24

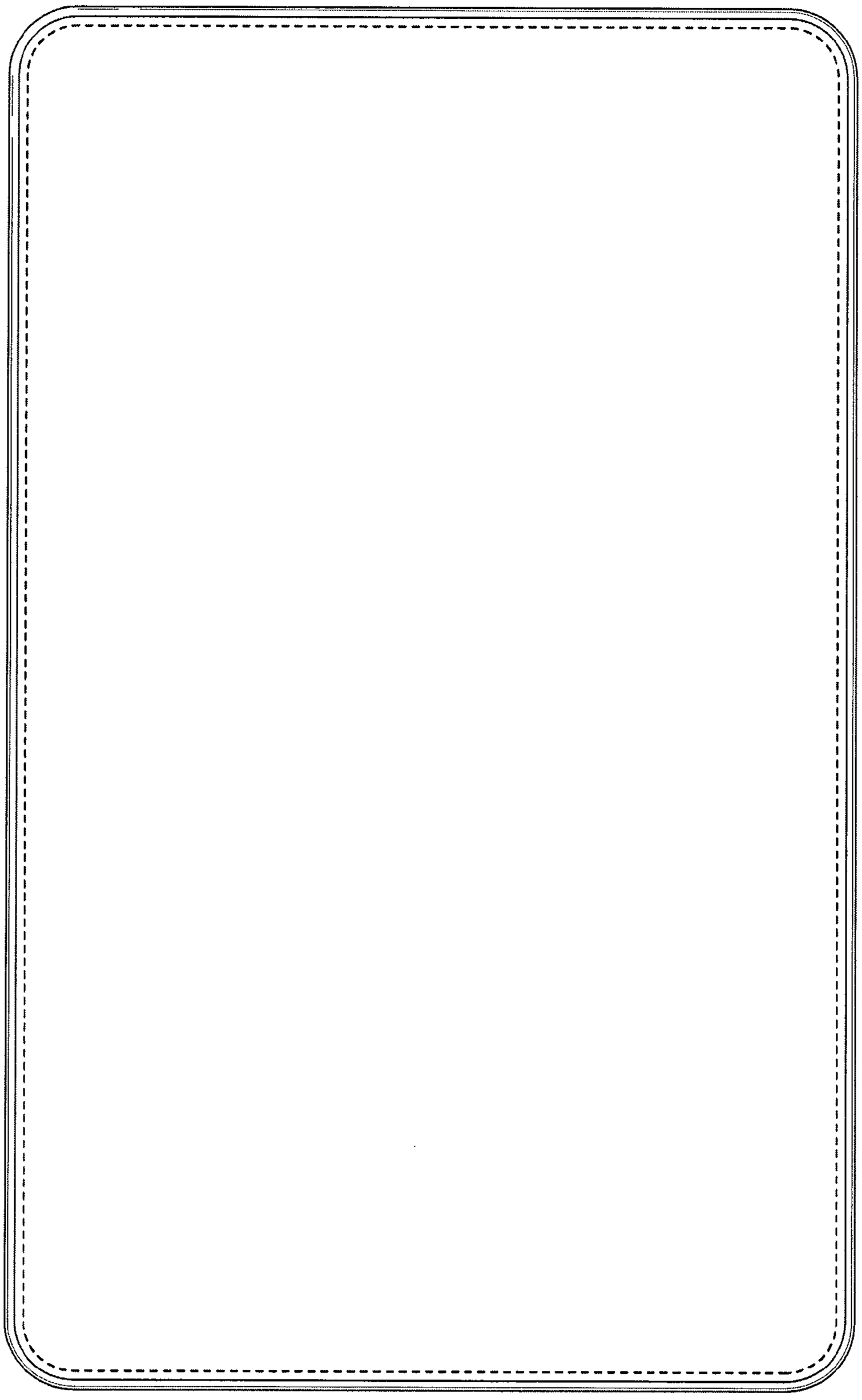

FIG. 25