US00D670595S

(12) United States Design Patent

Vandehey et al.

(10) Patent No.: US D670,595 S
(45) Date of Patent: ** Nov. 13, 2012

(54) **EAGLE INSIGNIA BADGE FOR A MACHINE**

(75) Inventors: **Bradley J. Vandehey**, Lake Oswego, OR (US); **D. Clark Jordan**, Boring, OR (US); **Scott E. Schauer**, Portland, OR (US)

(73) Assignee: **Cascade Corporation**, Portland, OR (US)

(**) Term: **14 Years**

(21) Appl. No.: **29/417,483**

(22) Filed: **Apr. 4, 2012**

(51) **LOC (9) Cl.** **11-03**

(52) **U.S. Cl.** **D11/107**

(58) **Field of Classification Search** D11/107, D11/134, 137, 158, 162, 131–132, 181, 95, D11/109, 53, 54, 79, 81, 99, 100, 233; D21/160; D12/190, 213, 204; 63/1.11, 35; D10/46.1
See application file for complete search history.

(56) **References Cited**

U.S. PATENT DOCUMENTS

D62,398	S	*	5/1923	Hunt	D11/137
D182,489	S	*	4/1958	Wills	D11/137
D233,242	S	*	10/1974	Brotman	D11/137
D254,403	S	*	3/1980	Brouwer	D11/233
D272,424	S	*	1/1984	Stahel	D11/107
D325,888	S	*	5/1992	Carroll	D11/132
D340,205	S	*	10/1993	Ilaria et al.	D11/137
D379,000	S	*	4/1997	Choi	D12/213
D504,376	S	*	4/2005	Tsai	D12/204
D520,403	S	*	5/2006	Schumacher	D11/99
D585,776	S	*	2/2009	Cowen et al.	D10/46.1
D646,211	S	*	10/2011	Hu	D12/190

OTHER PUBLICATIONS

Cascade Corporation, U.S. Appl. No. 29/412,951, Feb. 9, 2012, 8 pages.
Cascade Corporation, U.S. Appl. No. 29/412,973, Feb. 9, 2012, 5 pages.
Cascade Corporation, U.S. Trademark Registration No. 1,153,668, May 12, 1981, 1 page.
Cascade Corporation, www.cascorp.com, Sep. 12, 2012, 1 page.

* cited by examiner

Primary Examiner — T. Chase Nelson
Assistant Examiner — Mark Cavanna
(74) *Attorney, Agent, or Firm* — Chernoff Vilhauer McClung & Stenzel LLP

(57) **CLAIM**

The ornamental design for an eagle insignia badge for a machine, as shown and described.

DESCRIPTION

FIG. **1** is an isometric view from the upper right front of an eagle insignia badge for a machine embodying our new design;
FIG. **2** is a front elevational view thereof;
FIG. **3** is a left side elevational view thereof;
FIG. **4** is a right side elevational view thereof;
FIG. **5** is a top plan view thereof; and,
FIG. **6** is a bottom plan view thereof, the rear surface thereof forming no part of the claimed design and not being depicted.
The stippled portions in FIGS. **1** and **2**, depicting an eagle shape on the front of the badge, are of a visually contrasting appearance with respect to the remainder of the badge.
The eagle shape on the front of the insignia badge, as shown outlined in FIGS. **1** and **2**, is part of a registered trademark of Cascade Corporation, an Oregon corporation.

1 Claim, 2 Drawing Sheets

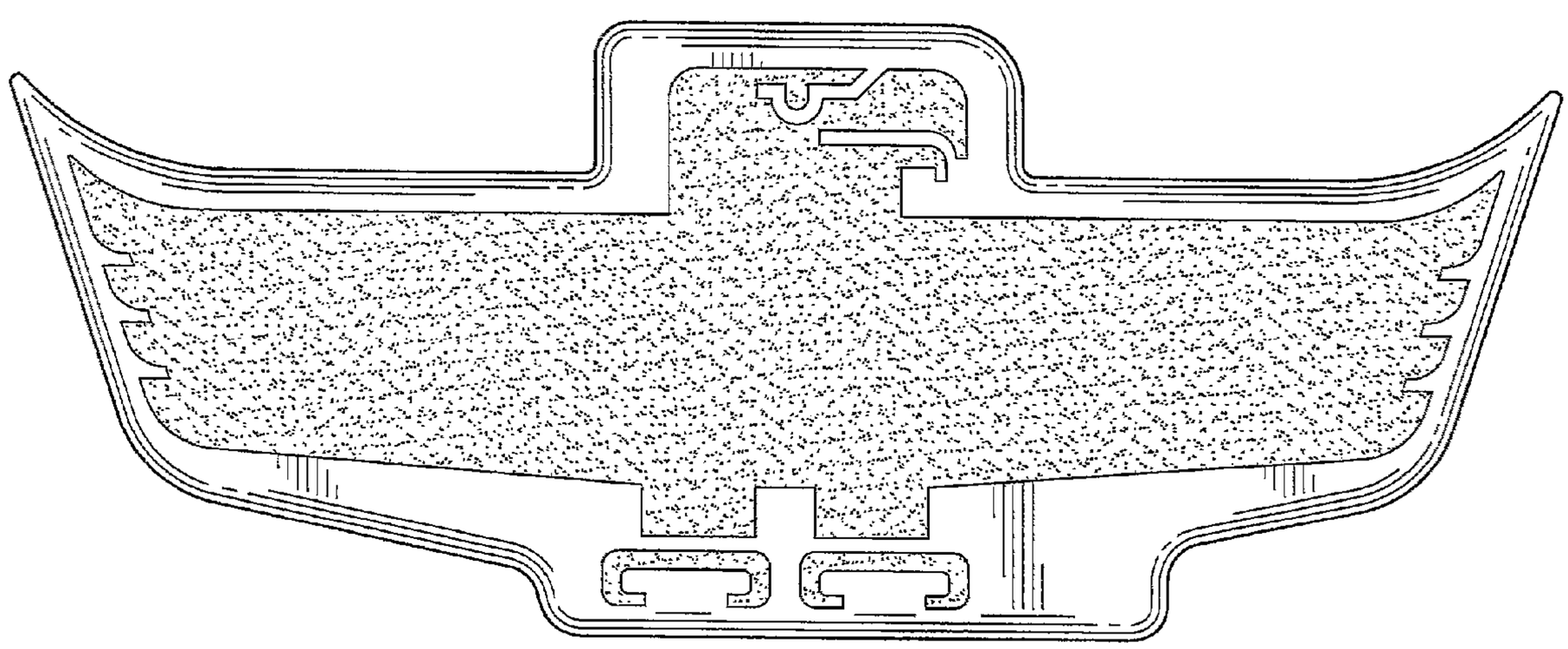

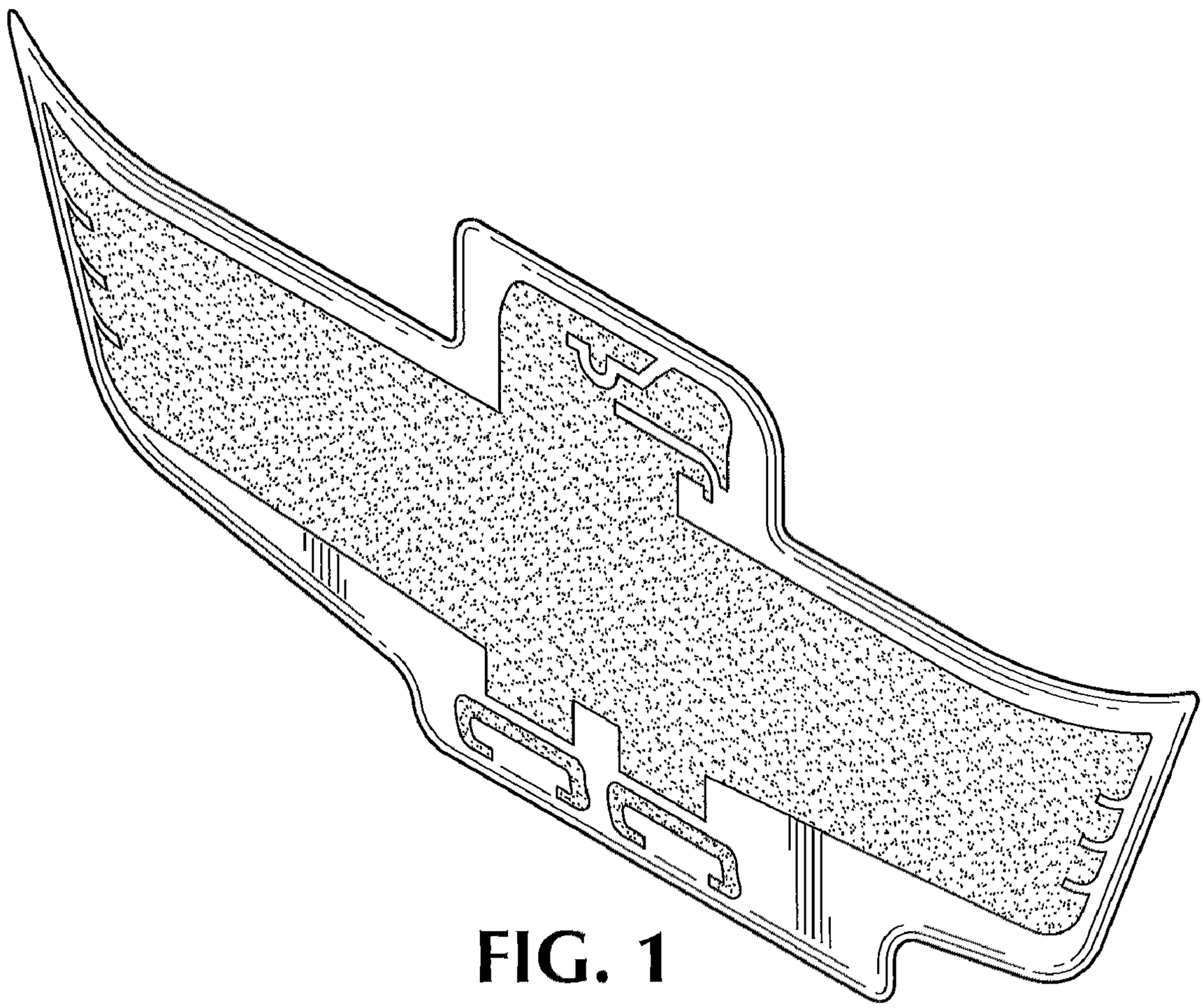

FIG. 1

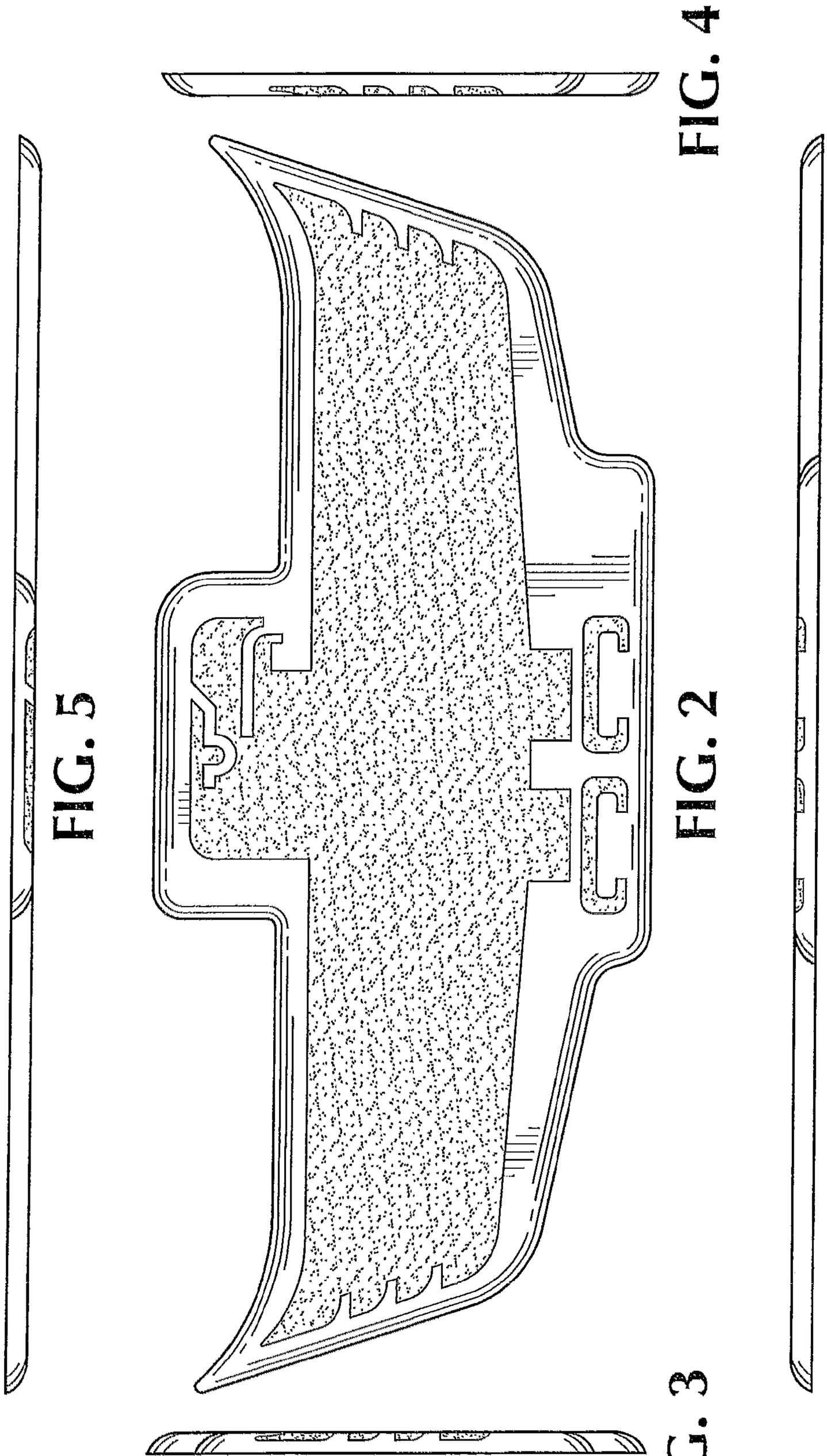

FIG. 4

FIG. 5

FIG. 2

FIG. 6

FIG. 3